This is a digital copy of a book that was preserved for generations on library shelves before it was carefully scanned by Google as part of a project to make the world's books discoverable online.

It has survived long enough for the copyright to expire and the book to enter the public domain. A public domain book is one that was never subject to copyright or whose legal copyright term has expired. Whether a book is in the public domain may vary country to country. Public domain books are our gateways to the past, representing a wealth of history, culture and knowledge that's often difficult to discover.

Marks, notations and other marginalia present in the original volume will appear in this file - a reminder of this book's long journey from the publisher to a library and finally to you.

Usage guidelines

Google is proud to partner with libraries to digitize public domain materials and make them widely accessible. Public domain books belong to the public and we are merely their custodians. Nevertheless, this work is expensive, so in order to keep providing this resource, we have taken steps to prevent abuse by commercial parties, including placing technical restrictions on automated querying.

We also ask that you:

+ *Make non-commercial use of the files* We designed Google Book Search for use by individuals, and we request that you use these files for personal, non-commercial purposes.

+ *Refrain from automated querying* Do not send automated queries of any sort to Google's system: If you are conducting research on machine translation, optical character recognition or other areas where access to a large amount of text is helpful, please contact us. We encourage the use of public domain materials for these purposes and may be able to help.

+ *Maintain attribution* The Google "watermark" you see on each file is essential for informing people about this project and helping them find additional materials through Google Book Search. Please do not remove it.

+ *Keep it legal* Whatever your use, remember that you are responsible for ensuring that what you are doing is legal. Do not assume that just because we believe a book is in the public domain for users in the United States, that the work is also in the public domain for users in other countries. Whether a book is still in copyright varies from country to country, and we can't offer guidance on whether any specific use of any specific book is allowed. Please do not assume that a book's appearance in Google Book Search means it can be used in any manner anywhere in the world. Copyright infringement liability can be quite severe.

About Google Book Search

Google's mission is to organize the world's information and to make it universally accessible and useful. Google Book Search helps readers discover the world's books while helping authors and publishers reach new audiences. You can search through the full text of this book on the web at `http://books.google.com/`

Library
of the
University of Wisconsin

A TREATISE ON

MILLING

AND

MILLING MACHINES

Price, $1.50

ELEVENTH THOUSAND

COPYRIGHT, 1919, BY

THE CINCINNATI MILLING MACHINE COMPANY

CINCINNATI, OHIO

THE PLANT IN WHICH CINCINNATI MILLERS ARE MADE

This illustration is made from a scale drawing and shows the plant as it actually is today. The machineshop building is 810 feet long; combined length of all the buildings 1300 feet. The three-story front is 380 feet wide. The entire plant, exclusive of the power plant, has eight acres (350,000 square feet) of floor space. It is the largest plant in the world devoted exclusively to the manufacture of Milling Machines and Milling Cutter Grinders.

Visitors are cordially welcome to inspect this plant at all times.

234478
MAY 20 1920
TDJ
.C49
6924913

PREFACE

The past few years have seen an unusually rapid development in the art of milling. We have carried out some very exhaustive experiments in cutter design, cutter and work cooling, and other branches of the art, which have led to marked improvements, not only in these particular branches, but in the Milling Machine itself.

Although some of the data pertaining to these developments have already appeared in various publications, we believe that their compilation in complete form, as found in this book will make them of much more general use to those interested in, and responsible for, efficient production from Milling Machines. A more complete knowledge of the action of milling cutters, the effect that action has on production, a familiarity with the different constructions and types of milling fixtures and holding devices, the cause of unsatisfactory Milling Machine performance and the basic principles of cutter sharpening, are all necessary for the intelligent application of the modern Milling Machine.

We have in this book given considerable space to various phases of these subjects, and to this end are presenting some matter never before published.

The mathematical chapters dealing with the computations involved in cutting spur, bevel, spiral and worm gears, present these subjects in a simple, detailed manner, which will, we believe, make them clear and useful to those for whom the usual method of presentation of this matter has always been too much involved.

The arrangement of the various formulas and mathematical tables will prove of convenience to all who have occasion to use them.

The formulas and diagrams in the chapters on gearing have been adapted from Machinery's Handbook and are printed by permission of the publishers.

The mathematical chapters, especially the chapters on Shop Trigonometry, Continued Fractions, Spiral and Bevel Gears, are based on material prepared by Mr. A. L. DeLeeuw, while Chief Engineer of The Cincinnati Milling Machine Company.

CONTENTS

CHAPTER I PAGE
The Construction and Use of Milling Machines 7

CHAPTER II
Erection, Care and Adjustment of Milling Machines 41

CHAPTER III
Toolroom Millers—The Dividing Head, etc 55

CHAPTER IV
Setting up the Machine 77

CHAPTER V
An Analysis of the Process of Milling 91

CHAPTER VI
Milling Machine Feeds 101

CHAPTER VII
Speeds of Milling Cutters 104

CHAPTER VIII
Stream Lubrication—Cutter and Work-Cooling System ... 125

CHAPTER IX
Milling Cutters—Notes on the Design and Efficiency of Modern Cutters 140

CHAPTER X
Cutter Sharpening 172

CHAPTER XI PAGE
Power Required to do Milling 182

CHAPTER XII
Various Methods of Milling 186

CHAPTER XIII
Milling Jigs and Fixtures 197

CHAPTER XIV
The Sizing and Cutting of Spur Gears 247

CHAPTER XV
Shop Trigonometry—Bevel Gears and their Calculation—Instructions for Cutting 267

CHAPTER XVI
Spiral Gear Cutting—Calculations, Formulas, Tables, etc. 291

CHAPTER XVII
Worm Gearing—Calculations and Methods of Cutting 310

CHAPTER XVIII
Continued Fractions and their Application to Shop Problems—Angular Indexing 319

CHAPTER XIX
Change Gears for Cutting Spirals 332

CHAPTER XX
Cams—Tables for Setting the Milling Machine for Milling Spiral Cams 345

CHAPTER XXI
Tables of Natural Trigonometric Functions 385

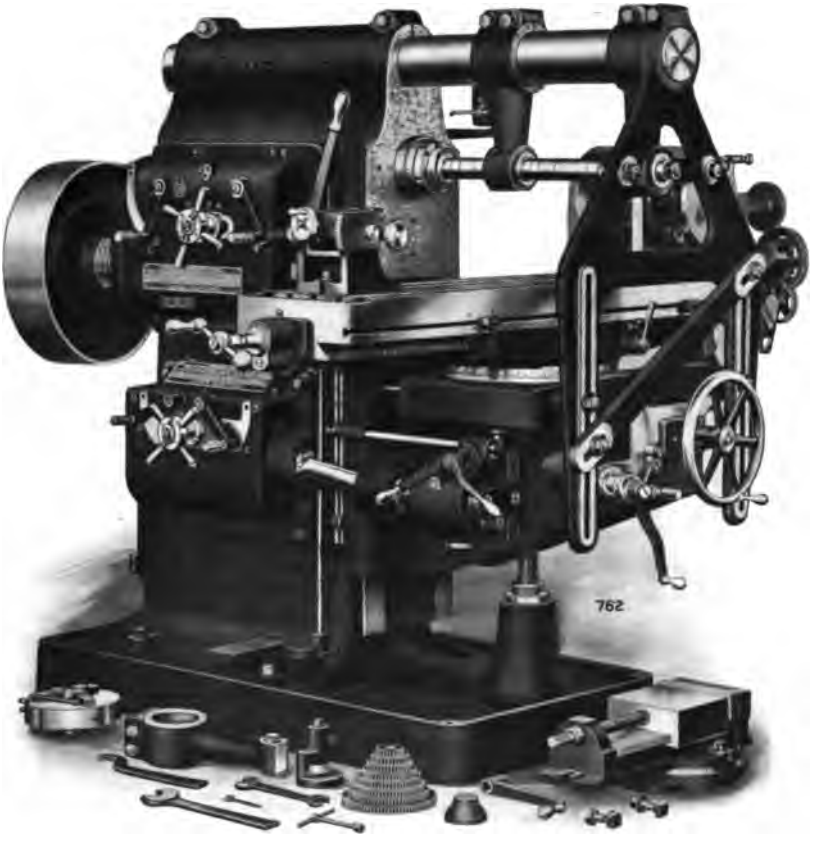

High-Power Universal Cincinnati Miller

Made in Six Sizes

(Patent Rights Fully Reserved)

CHAPTER I

THE CONSTRUCTION AND USE OF MILLING MACHINES

Before entering into an analysis of the process of milling, the design of milling cutters, jigs, fixtures, etc., and the mathematics involved in the setting up of the machine for some classes of milling, it may be best to first examine into the construction of the machines and attachments available.

Classification of Machines. In this book we will confine ourselves to the Column and Knee Type Milling Machines and the smaller sizes of Manufacturing Millers in most general use. These comprise the types of machines with which everyone is more or less familiar. They are the machines that are used in the toolroom, in the jobbing shop, for model work, repair shops and for manufacturing.

Universal Milling Machines, so called because of the great range of work that they will accommodate, are arranged with a swiveling table, and regularly equipped with a dividing head. They can thus be used, in addition to a general line of milling, for all sorts of indexing and milling work between centers, such as spur and spiral gears, and also on angular work, such as bevel and mitre gears. Each toolroom should contain one or more of these Universal Machines.

Plain Milling Machines are similar to the Universals, differing only in that the Plain Machines do not have a swiveling table, and that their equipment does not include index centers of any sort. They are used both in the toolroom and for regular manufacturing.

Vertical Milling Machines are similar to the Plain Milling Machines, with this exception—that the spindle is in a vertical position, and at right angles to the plane of the table. They are particularly adapted for the use of face and end mills in the manufacturing department, for the milling and boring of jigs in the toolroom, and for the machining of dies.

Manufacturing Millers are particularly adapted for repetition work produced in large quantities. They are, generally speaking,

simpler in construction than the Knee Type Millers, and are used in large quantities in the manufacture of firearms, typewriters, automobiles, etc. All of these machines will be briefly described in the following pages.

The Selection of a Milling Machine. The selection of the type of Miller best adapted for the economical production of a given class of work can not be given too careful consideration. The quantity and quality of work that the machine will produce must justify the investment.

We have gone far towards helping our customers in the solution of their milling problems and have thus gained a wider knowledge

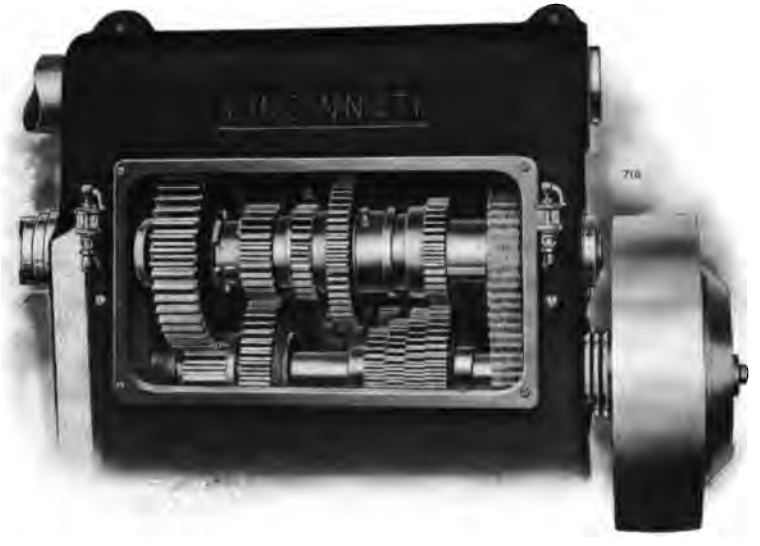

Fig. 1. The Spindle Driving Gears (the chain drives the feed only)

The chain shown has nothing to do with the Spindle Drive. It is solely a feed chain and is supplied only on special order when feeds are to be read in thousandths per revolution. Normally the feed is driven from the constant speed shaft and reads in inches per minute.

of the economic field of milling than can be obtained from the limited experience of one shop on one class of work.

We are prepared to make complete time studies of all the milling operations on any piece of work, suggest methods, fixtures, etc., and furnish the complete equipment for doing it.

Our wide experience in this work and the great variety of milling machines made by us, enable us to recommend and furnish that size,

style and type of machine which will prove most economical in view of all the conditions attendant upon its installation and use.

It would hardly be appropriate to attempt to deal here with all the considerations upon which an intelligent selection of a machine depends, but mention of the most important factors will, we believe, prove helpful.

Whether it should be a Cone-Driven or a High-Power Constant Speed Drive type machine depends on—

The quantities in which parts are made.

The kind of work to be milled.

Power required.

Method of transmission used, whether by line shaft, group drive or individual motor drive.

Whether it should be Plain, Universal or Vertical depends on—

Whether it will be one of many machines or the only Milling Machine in the department.

The amount of time it will be used for spiral cutting.

Whether it will be used for jobbing or manufacturing.

Whether for machining flat surfaces, die sinking or gang work.

Whether it should be an Automatic depends on the quantities in which the parts are made.

The suggestions contained in the illustrations of machines in operation will be helpful in the selection of the proper machine.

Plain Milling Machines. These are made in both the Constant Speed Drive High-Power type and the Cone-Driven type. The rapid development of the use of Milling Machines is constantly extending their field into heavier work, demanding more power at the cutter and therefore, increased strength and rigidity in the machines. This development has led to the design of the constant speed drive machines. In their design the spindle power is not handicapped by the limitations of a driving cone, and for all practical purposes it may be assumed that the constant speed belt drive delivers the same power to the cutter at all spindle speeds, so that the operator knows just what can be expected from the machine under all conditions.

These machines lend themselves readily to direct connected motor driving. They may be driven direct from the line shaft. A countershaft is not necessary. The main driving pulley is journaled on a bracket bolted to the column of the machine and is connected to the driving shaft by means of a disk friction clutch of large proportions. The machine is started and stopped through this clutch by means of a lever at the front of the machine. The spindle drive gearing is arranged as shown in Fig. 1. All the gears are steel and hardened. Those most used for speed changing are chrome nickel steel, heat treated and hardened, making an extremely durable drive. There are sixteen speeds provided. The small gear "M" in the illustration is never used for transmission but serves as a pilot when engaging the large gears.

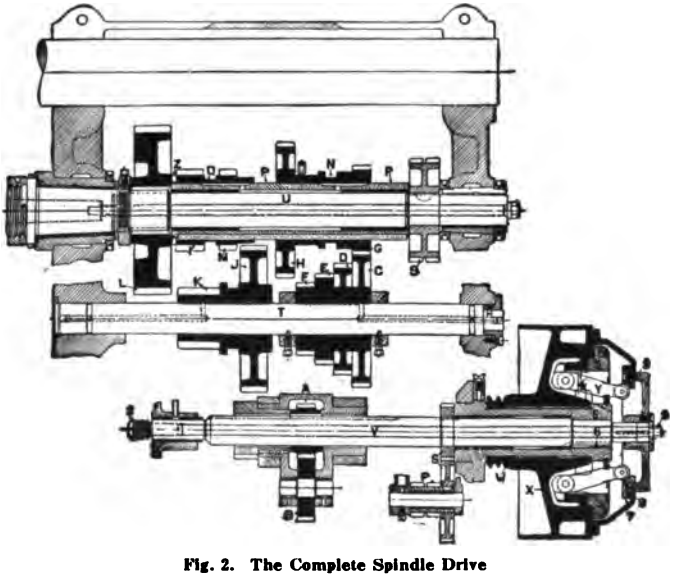

Fig. 2. The Complete Spindle Drive

Gears I, J, K and L are steel forgings. All others are nickel steel, heat treated, and all the gears are hardened. Face gear L is the only gear keyed to the spindle. No gears are in mesh except those doing work.

Fig. 2 shows the driving gears of a horizontal machine in section. In order to reduce torsional strains and consequent vibrations to a minimum, there are no gears keyed directly to shafts with the single exception of the main gear "L," which is keyed to the front end of the spindle close to the bearings.

Another feature which gives these machines the strength and

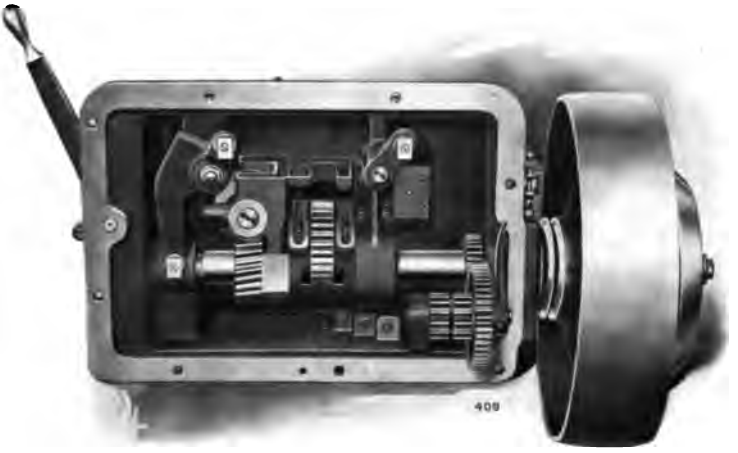

Fig. 3. Inside of Spindle Drive Box

Showing driving shaft, tumbler and chain wheel for driving feed from constant speed shaft. The feed may also be driven from the spindle as shown in Fig. 1.

rigidity which modern practice demands is the automatically clamped tumbler, Fig. 3 and Fig. 4. The tumbler frame is supported from the machine frame. None of its weight comes on the main driving shaft. The swinging frame carrying the tumbler gear rocks on the trunnions "C" and is operated by means of the pilot wheel on the outside of the machine through the spiral gears "S." By means of this same pilot wheel the entire tumbler frame can be adjusted laterally. When the pilot wheel is turned to the right the gears are brought into mesh and the lug "D" of the swinging tumbler frame abuts on the stop pins governing the proper meshing. Now if the pilot wheel is turned farther to the right, the swinging frame, the tumbler frame and the spiral gears act as a system of levers and screw which lock the tumbler frame securely to its slide on the machine frame and hold the support for the tumbler gear as

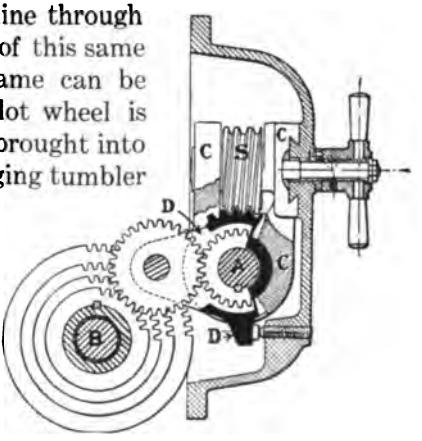

Fig. 4. Section through Tumbler

The frame C C C is a steel casting of large dimensions, supported entirely on the dovetail bearing in the drive box, and the operation of speed changing automatically clamps it to this bearing in each working position.

firmly as if it were permanently bolted in place. By turning the pilot wheel to the left as far as it will go, the tumbler gears are brought out of engagement.

Fig. 5. Outside of Speed Change Box
All changes are made through the pilot wheel and two levers shown.

The speeds are very easily and quickly changed by means of the pilot wheel above mentioned and the two levers shown in Fig. 5. The lever positions for each speed are clearly marked. For example: to obtain 115 r. p. m., the index plate shows corresponding to this number the symbols 3-BC.

It is therefore merely necessary to move one lever to "B," the other to "C," and move the tumbler to the No. 3 position. By pressing lightly on the treadle, while moving these levers, the gears are given a sufficient amount of motion to facilitate easy speed changing.

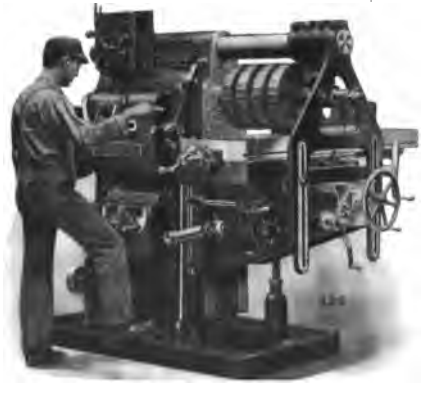

Fig. 6. Position of Operator when Changing Speeds
He moves the lever as far as it will go and then by gently pressing on the treadle the gears slowly turn and will go into position.

The position of the operator when changing speeds is shown in Fig. 6. The feed is driven

Fig. 7. The Feed Box

This remains the same for feeds driven from spindle or from constant speed shaft.

from the constant speed shaft and the feed plate reads in inches per minute, unless otherwise specified at the time the machine is ordered.

The outside of the feed box is shown in Fig. 7. The feed index and feed change levers are the same as for the drive box, but feed changing is done best while the machine is running.

The inside of the feed box is shown in Fig. 8.

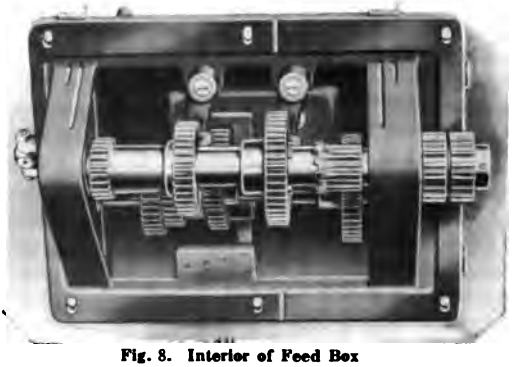

Fig. 8. Interior of Feed Box

This is the complete mechanism for providing the 16 changes of feed.

The Column, Knee, Saddle and Table. A powerful spindle drive must be supplemented by correspondingly strong main frame members. In our designs we have made use of the box section principle. The illustrations show that the Column is a rectangular box with openings only large enough for inserting the main drive gearing and the feed gearing.

The base deserves especial attention. It must have sufficient strength to rigidly support the machine and its work, and to withstand the wedging action of the cutter as discussed on page 93. Any tendency to spring in the manner of a diaphragm seriously affects the alignments as well as the rigidity of the machine. As a result of careful experiments, we have changed the design of our milling machine bases, giving them about six times the strength that had formerly been considered adequate.

The Knee, Fig. 9, must carry the entire weight of the work and its fixture and in addition to this must resist the twisting strains resulting both from taking the cut and from the varying twisting moments set up through the changing position of the table with its work, in relation to the knee.

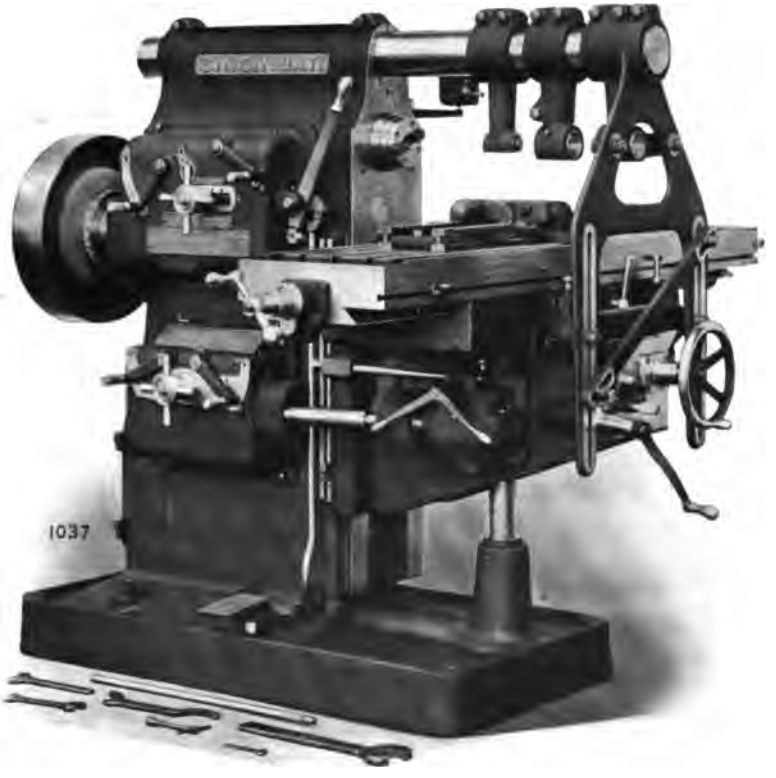

High-Power Plain Cincinnati Miller

Made in Six Sizes

(Patent Rights Fully Reserved)

It has been general practice to provide the knee with clamping levers for locking it to the column when taking a cut, but we have found this rapidly distorts the knee, reduces the bearing to a small area under the clamping screws, and ultimately it becomes impossible to so clamp the knee that it will not rock on the column. To avoid this difficulty we have eliminated knee clamps entirely, have increased very considerably the metal in the knee where it engages the column, and provided a long taper gib, Fig. 11, adjusted length-

Fig. 9

This shows the knee. Note the heavy tapered gib, which provides a full length metal to metal bearing at all times.

wise, which affords at all times a full bearing on the column. This gib, when adjusted so as to give a nice sliding fit between these two members, provides a degree of rigidity that enables new pattern Cincinnati High-Power Millers to do heavier cutting than was previously possible and also to do accurate work within closer limits.

For example, a No. 5 Machine (which has a standard 20 h. p. motor rating) had been for some nine months in operation in our factory on a variety of work, taking cuts which sometimes required 40 h. p., when it was called upon to mill some long bars. These are shown in the illustration, Fig. 12. They are 42″ long, 4″ wide, and 1¾″ thick. Two of them were milled with a spiral mill mounted on an arbor in the usual way, two with a shell end mill, using a Vertical Attachment, and two with the same mill in the spindle of the

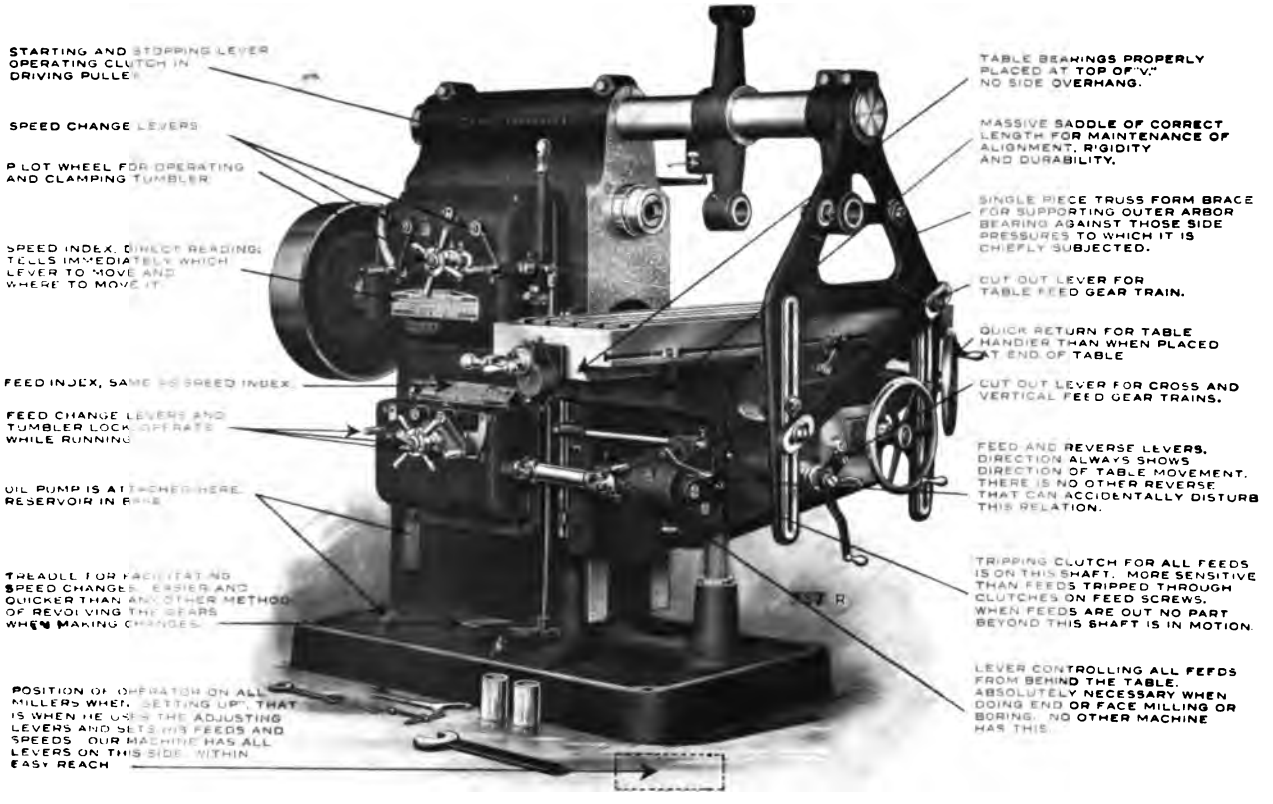

Fig. 10. Efficiency Diagram of Cincinnati High-Power Millers

machine. They were machined on both sides and when placed on a surface plate as shown, they showed flat within .001", each holding tight eight pieces of tissue paper. This, we believe, is conclusive evidence that with our new construction there is no movement between the knee and column, nor is there any springy action in the other essential parts of the machine.

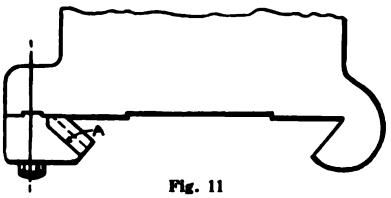

Fig. 11

The section through the knee shows its great strength in the V's. The gib always has a full bearing at "A" through its entire length. This gives Cincinnati High-Power Millers unusual solidity.

The construction of the knee is clearly shown in the illustrations, and the line drawing indicates its strength at the point where it engages the column.

Our tables have their bearings at the top of the "V" along the outer edge of the table face, thus supporting the full width of the table.

The Saddle is shown in Fig. 13. Its mechanism is so constructed that the feed is direct to the table feed screw. There are no auxiliary shafts. The driving gears are close to the nut and therefore only a short section of the lead screw is in torsion. This contributes largely to the efficiency of our feeding mechanism.

Centralized Control. A modern machine tool must be handy to operate. It is essential that the operator's task should be made as easy as possible. With this in mind we have grouped all our levers on that side of the machine where the operator would naturally stand when using them. The diagram, Fig. 10, shows this quite clearly.

Fig. 12

The illustration, Fig. 14, shows an added feature of handiness, resulting from placing a feed lever where the operator can control his machine from behind the table. This is indispensable when doing end milling, face milling, or boring on a large piece of work. The arrangement of the table feed levers at the front of the saddle enables the operator on a Vertical Machine to traverse the periphery of a rectangle without stop-

Fig. 13. The Saddle, Lead Screw and Quick Return

ping either feed or speed. This makes it quite practical to mill such a piece of work without leaving an off-set where the cut ends.

Power Quick Traverse and Return. All of the larger Plain and Vertical Machines are regularly equipped with our Power Quick Traverse and Return Arrangement, Fig. 15. It is driven

Fig. 14
Control of feeds from behind the table, enabling the operator to see his cutter in engagement with the work when doing endmilling, boring, etc.

direct from the main pulley independent of the feed mechanism and provides a movement forward or back at 100″ per minute. The controlling lever indicates the direction and when the lever is released, the table stops. The feed and power quick traverse can not both be engaged at the same time. There are limit stops which

prevent going beyond the limits of the table travel. All these things make for safety. Being driven from the main pulley, which does not stop when the machine is shut down, this power quick traverse is available for making quick table adjustments when setting up the machine preparatory to milling a piece of work. This arrangement can be furnished on our smaller high-power machines as an extra attachment.

Fig. 15. The Power Quick Traverse and Return

Direct-Connected Motor Drive. We have developed a simple and highly efficient arrangement which is shown in Fig. 16. The motor is mounted on a swinging base hinged to the base of the machine so that part of the weight of the motor is supported by the belt, keeping it at all times at the proper tension and doing away with the need for any attention on the part of the operator. An endless leather belt and a metal belt guard are included in the equipment. This arrangement is suitable for any make or style of constant speed motor running not faster than 1200 r. p. m.

Fig. 16. The Constant Speed Belted Motor Drive Arrangement
Suitable for constant speed motors having a maximum speed not over 1,200 revolutions.

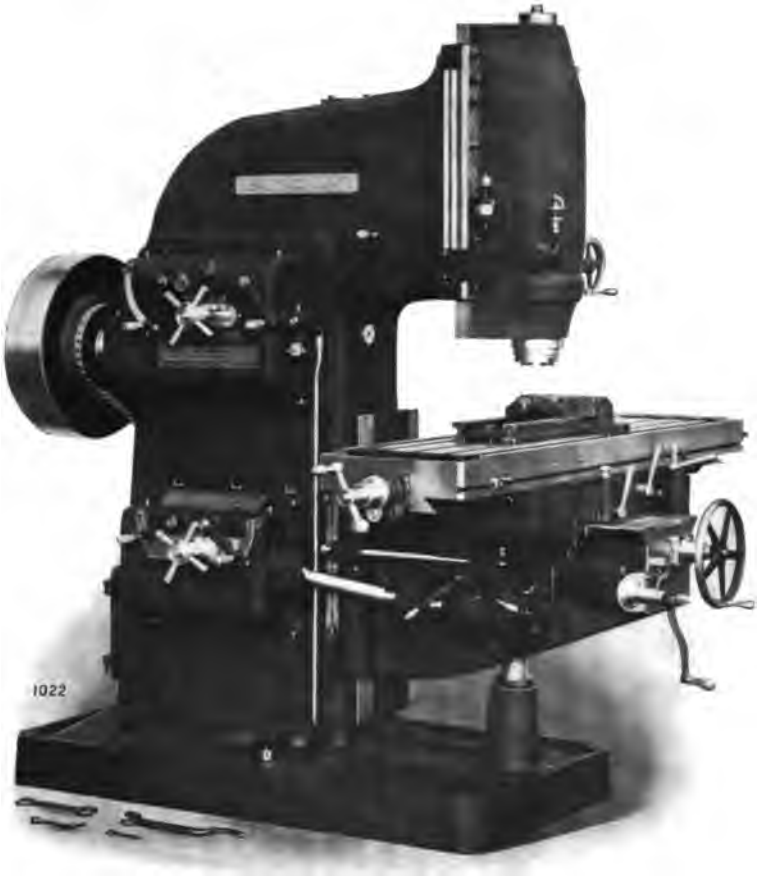

High-Power Vertical Cincinnati Miller

Made in Three Sizes

(Patent Rights Fully Reserved)

Another style of Motor Drive Arrangement is shown in Fig. 17. In this case the motor is mounted on a fixed extension fastened to the base of the machine and the drive is through reducing gears and a silent chain to the main shaft of the machine. This arrangement is suitable for motors of any speed up to 1200 r. p. m. The reducing gears, sprockets, chain, chain guard and base are all included in the equipment.

Fig. 17. The Chain Motor Drive Arrangement
The motor is placed where it does not increase the working floor space of the machine.

Vertical Millers. These machines are similar to the High-Power Plain Millers in all particulars, except that the spindle is in a vertical position. Here again we have aimed to make a machine

Fig. 18. The Spindle and Spindle Driving Gears
These gears are made of steel and hardened.

that will have the same degree of strength in all its important parts, bearing in mind that the pressure against the cutter which must be resisted by the members carrying the spindle is the same as the pressure against the piece of work on the table.

The construction of the spindle head and its driving gearing is shown in Fig. 18. All the driving gears, including the mitre gears shown, are steel and hardened. These latter have self-contained bearings. The one through which the spindle passes has a long hub bearing which takes the entire thrust of the gears, thus relieving the spindle from these strains. The spindle is as long as the spindle in the corresponding horizontal machines. Its bearings are both carried in the head frame and are always a maximum distance apart.

Vertical adjustment of the spindle is obtained by moving the entire head frame carrying the spindle. This frame has long bearings provided with an adjustable taper gib, and when the machine is in constant operation on heavy repetition work, this frame may be securely clamped to the body of the machine, converting it temporarily into a fixed head machine.

The head adjustments are quickly made by means of a pilot-wheel, the head itself being counter-balanced. There is also a slow movement provided through worm and wormwheel when desired.

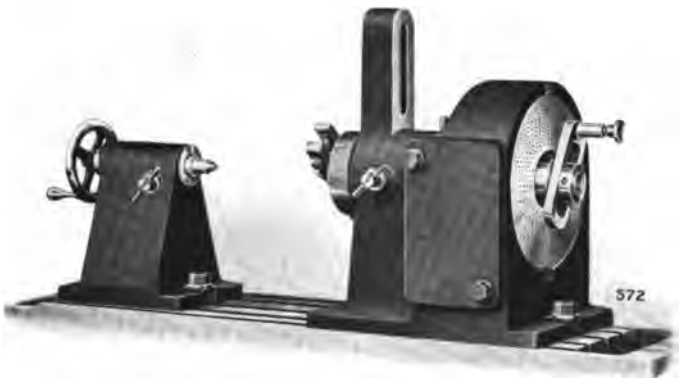

Fig. 19. Plain Index Head

Milling Machine Attachments

The range of work that a Milling Machine can do is greatly increased by the use of attachments. An almost endless variety of

Fig. 20. Gear-Cutting Attachment

attachments has been devised for special requirements. It is somewhat difficult to determine where to draw the line between what are essentially attachments for the machine and those other devices which should be properly classed as fixtures.

We always carry in stock a full variety of standard attachments suitable for the various sizes of machines. In their design we have again followed the principle that each part of the machine should be equal in capacity to all other parts.

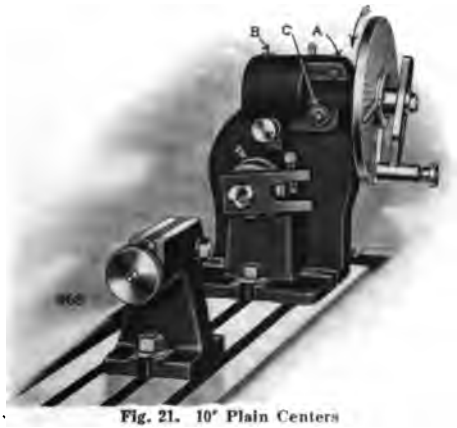

Fig. 21. 10" Plain Centers

The Universal Indexing and Dividing Head, which forms part of the equipment of Universal Machines and which can also be used on Plain Machines for work done between centers as well as for angular work, such as bevel gears, mitre gears, etc., is described in another place.

The Combination Index Heads. For a general line of indexing work, the Combination Index Heads will be found extremely convenient. These can be furnished as Plain Index Centers, Fig. 19, indexing through a plate at the rear by means of an index lever mounted directly on the spindle. To this can be added the bracket

carrying a side index plate, which makes the same divisions as our Universal Dividing Heads, for universal indexing through worm and wormwheel. This makes our Gear-Cutting Attachment, Fig. 20, and the use of this can be still further extended to include spiral milling by adding a shaft and gears for connecting it with the lead screw. In this form it is the Spiral Milling Head. These heads are made in both 12″ and 16″ sizes and are recommended for use not only on Milling Machines, but on other machines that are called upon to do work between centers.

Fig. 22. High Number Indexing Attachment

Another form of indexing centers for small light work is shown in Fig. 21. These centers swing work 10″ in diameter and index through a side index plate which operates through a worm and wormwheel in a manner similar to that employed on our Universal Indexing and Dividing Head, Gear-Cutting Attachment, and our Spiral Milling Head. The worm and wheel can readily be disengaged and the indexing may then be done direct by revolving the spindle by means of the handle attached to the disk at the rear of the head, which disk also serves as an index plate, and indexes any number dividing evenly into 24. The divisions for 3, 4, 6, 8 and 12 spaces are plainly marked.

High Number Indexing Attachment. All our index heads using the side index plate make an unusually large number of divisions, as shown in the table in the chapter on Universal Toolroom Millers. These divisions include all numbers, odd and even up to 60, even numbers and those divisible by 5 up to 120, and many useful divisions beyond these. However, it often happens that additional divisions are required for special work in the toolroom, or for model making and experimental

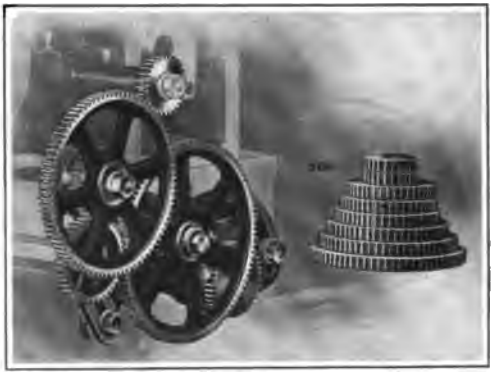

Fig. 23. The Driving Mechanism

work. For all these requirements the High Number Indexing Attachment, Fig. 22, will be found very convenient.

It consists of three plates of the same size and interchangeable with the regular side index plate. They will make all divisions, odd and even, up to and including 200, all even and those divisible by 5 up to 400, except 225-275-325-375. This is sufficient for practically all requirements. The indexing is all simple indexing direct through the plates and is therefore more desirable than any system of compounding or differential arrangements requiring the use of change gears.

Driving Mechanism. When it is desired to equip a Plain Machine with a Spiral Milling Attachment and Universal Dividing Head, or Spiral Milling Head for a general line of spiral work, it is also necessary to add the Driving Mechanism shown in Fig. 23, for connecting the lead screw with the Spiral Head. This mechanism includes the 12 change gears and the segment.

Fig. 24. Undercutting Attachment

Undercutting Attachment. The Milling Machine is frequently called upon to cut gears of larger diameter than will pass under the spindle. For such work our Undercutting Attachment greatly extends the range of the machine. It consists of two

heavy raising blocks for supporting the Dividing Head, or work-carrying member, and a special arbor support which is attached to the Knee as shown in Fig. 24, instead of to the overarm, as is regular practice. A standard arbor and either a Universal Dividing Head or a Gear-Cutting Attachment can be used. The work is supported immediately above the cut by an adjustable stud in the raising block under the tailstock, which takes the strain due to the thrust of the cutter, and thus relieves the centers from any strain from this source.

Fig. 24-A High-Speed Attachment

High-Speed Milling Attachment. Sometimes work requires the use of very small end milling or profiling cutters which should run at very much faster speeds than the highest speeds provided on standard milling machines. For such work the High-Speed Attachment, shown in Fig. 24-A, comes in very handy. It is a geared attachment driven from the main spindle and is supported by the front box to which it is clamped. It is made in sizes suitable for use on Nos. 1 and 2 Cone-Driven Machines.

Spiral Milling Attachment and Universal Milling Attachment. It is often desired to mill short lead spirals which have an angle that is greater than that to which the table of the Universal Machine can be swiveled. This can be easily and satisfactorily accomplished by adding to the equipment of the Universal Machine, a Spiral Milling Attachment, Fig. 25, or, where the work is lighter, a Universal Milling Attachment, Fig. 26. These attachments will both cut spirals of any angle up to 70°, and can be used on the Plain Milling Machine in conjunction with a Dividing Head or Spiral Head, and Driving Mechanism for this class of work.

Fig. 25. The Spiral Milling Attachment

Fig. 26. Universal Milling Attachment

The Universal Attachment, Fig. 26, can also be used as a Vertical Attachment. When it is desired to mill spirals on Plain Machines, the Spiral Milling Attachment is recommended.

Fig. 27. Style H Vertical Attachment

Vertical Attachments. There are many occasions when horizontal machines, both Plain and Universal, are called upon to do the work that could be best done on a Vertical Machine. At the same time there may not be enough of this to justify the instal-

lation of a Vertical Miller. For all such work horizontal machines can be converted into very efficient Vertical Machines by the addition of a Vertical Attachment.

Fig. 28. Style A Vertical Attachment

These are made in two sizes —the heavy attachment as shown in Fig. 27, and the light attachment, especially adapted for light profiling on the small machines, as shown in Fig. 28.

Rack Attachments. A general line of rack cutting can be done on a milling machine by using a Rack Attachment, as shown in Fig. 29, and the usefulness of this attachment is further increased by the use of the Rack Indexing Attachment, Fig. 30. This attachment includes different combinations of gears which enable racks to be indexed by making either a half or complete turn of the index plate, and will index all diametral pitches from 4 to 16 inclusive, and all even diametral pitches from 18 to 32 inclusive; standard circular pitches from $\frac{1}{8}$ to $\frac{3}{4}$ varying by sixteenths, also such odd pitches as $^1/_7$″, $^1/_6$″, $^1/_5$″, $^2/_7$″, $^1/_3$″, $^2/_5$″.

Slotting Attachment. Toolroom work, pattern making, and similar work requires the use of a slotter, but it is rarely that there is enough of this sort of work to justify the installation of such a machine. It can be very well done on a Miller by the addition of a Slotting Attachment, as shown in Fig. 31, which has been especially designed for meeting the requirements of tool and diemakers. It can be set at an angle on either side of the vertical position without disturbing the length of stroke. The toolholder is of clapper-box construction, relieving the tool on the up-stroke. It may be

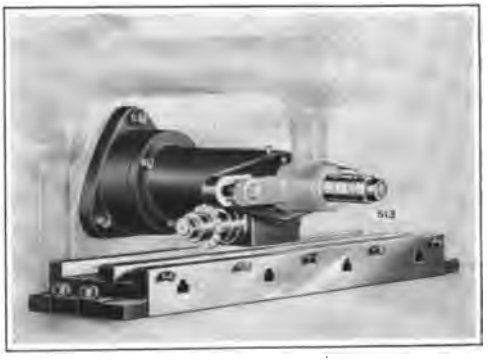

Fig. 29. Rack Milling Attachment

swiveled through a complete circle and a graduated dial is provided for setting it at any desired angle.

Fig. 30. Rack Indexing Attachment

Circular Milling Attachment. This is shown in Fig. 32. It is applicable to Plain, Universal and Vertical Machines. It greatly

Fig. 31. Slotting Attachment

increases the usefulness of any machine. It is driven from the feed box and is provided with an automatic throw-out operated by

adjustable dogs. The direction of rotation may be reversed, which adapts it thoroughly for internal and external milling.

The driving worm may be thrown out of mesh at any time when milling short sections of the circumference of work, and the attach-

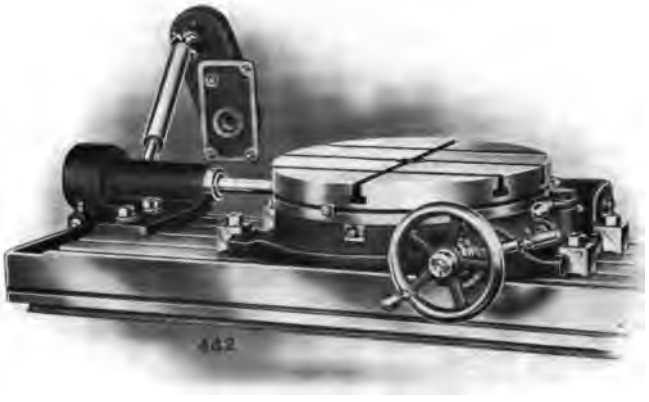

Fig. 32. The Circular Milling Attachment

ment revolved by hand to bring the next surface to the cutter. The circumference of the attachment is graduated in degrees.

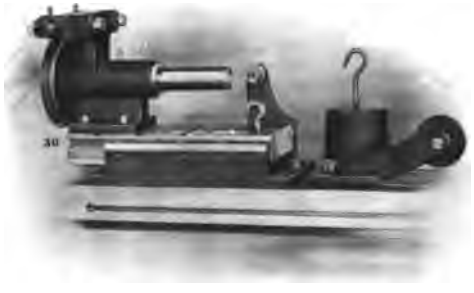

Fig. 33. The Cam Milling Attachment

Cam Milling Attachment. An attachment especially designed for milling face cams up to 16″ in diameter and cylindrical cams up to 8″ in diameter is shown in Fig. 33. The change from face to cylindrical cam milling is readily made by setting the wormwheel

Fig. 34. Oil Pump for Cone-Driven Machines

spindle at right angles to the milling machine spindle. It can be provided with a countershaft for power feeds when desired.

Fig. 35. Oil Pump for High-Power Machines

Oil Pumps. We can furnish oil pump equipments for either Cone-Driven or High-Power Millers. In both cases the oil reservoir is formed in the base of the machine and the pump is attached to the outside of the column, making a very neat and compact arrange-

ment. The oil is returned to the reservoir through a flexible tube connected with the end of the table. These equipments are shown in Figs. 34 and 35.

Our pump and equipment for flooded lubrication are fully described in the chapter on stream lubrication.

Fig. 36. Swivel Vise

Fig. 37. Plain Vise

Vises. Since the work required of toolroom machines is constantly changing special fixtures are seldom used. The work is usually held in the vise furnished with the machine. Our standard design of Swivel Vise for Universal Millers is shown in Fig. 36. These vises are made in four sizes with jaws from $5\frac{1}{8}$" wide to $8\frac{5}{8}$" wide. They are provided with a graduated swivel base.

They are also furnished as Plain Vises by omitting the swivel base, and are shown in this form in Fig. 37.

Another standard type is the Toolmaker's Universal Vise, Fig. 38. This is intended for toolroom work, requiring angular settings, not obtainable with the other styles of vises. Its jaws are 6" wide, $1\frac{7}{16}$" deep and open $3\frac{1}{2}$". When in a horizontal position the top of the jaws are $8\frac{5}{16}$" above the table.

Fig. 38. Toolmakers' Vise

All-Steel Vises. Our larger Plain and Vertical Machines are furnished with our new All-Steel Machine Vise, shown in Fig. 39. These larger machines are usually called upon for heavy work and the material comes to them in the rough state. An extremely accurate tool like our standard Plain Vise, described above, is not

Fig. 39. The All-Steel Vise (Patented)

adapted for holding this sort of work. The coarsely serrated hardened jaws of the All-Steel Vise are so arranged that the clamping pressure causes the jaws to move downward, carrying the work with them until it bears solidly upon the side bars of the vise, or some other supporting member.

These vises are low, and therefore hold the work as closely as possible to the table. The movable jaw is free to swivel and thus adjusts

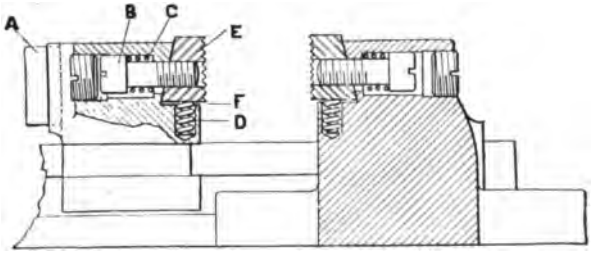

Fig. 40. Section of All-Steel Vise Showing Construction

itself to irregular pieces. The vise is quick-acting and being made entirely of steel, is durable. It is made in two sizes, with jaws 8″ wide and jaws 10″ wide; 2″ deep and opening 10″. The vise is light and easy to handle. It is recommended for use not only on milling machines, but on other machines using vises.

The 18-inch Automatic Cincinnati Miller

With Intermittent Feed, Automatic Spindle Stop and Power Quick Return

Plain and Duplex, with 18″ or 24″ table travel

(Patent Rights Fully Reserved)

Automatic Milling Machines

Whenever duplicate parts are manufactured in large quantities as in the construction of firearms, typewriters, adding machines, etc., the work of the milling machine is reduced to absolute routine, and it has been the practice to employ a simple single purpose machine for the work. Since one operator must serve a number of these machines, it is clear that the more automatic the machines, the simpler the functions of the operator, and consequently, the greater the number of machines that he can conveniently take care of. With this in mind, the Cincinnati Automatic Milling Machines were designed.

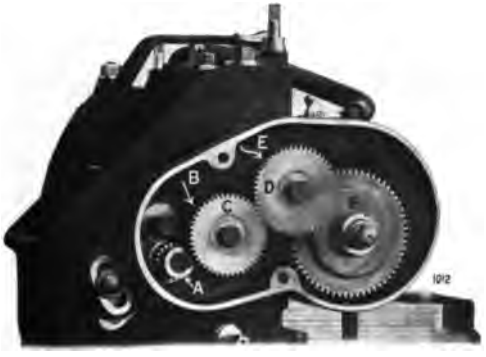

Fig. 41
Showing normal spindle drive gear arrangement.

The machines are of rigid and powerful construction. All unnecessary slides have been eliminated. There is no saddle. The table rests directly on the bed. When the machine is set up for operation, the only movable parts are the rotating spindle and the sliding table. A stream lubrication system, as described in the chapter on that subject, forms part of the equipment of each machine.

Fig. 42
Arrangement of spindle drive gears for reverse speeds as used for face milling and also on Duplex Machine. The reversing Gear R and its stud are not furnished with the plain machine.

The Automatic Spindle Stop. These machines are so arranged that at the termination of the table feed a dog will automatically throw out the spindle clutch and apply the brake while the table is automatically reversing, so that the table returns while the cutter is stationary. This adds greatly to the safety of the operator and also improves the quality of the finished work. The automatic

spindle stop can be easily disengaged when the nature of the work does not require the use of this feature.

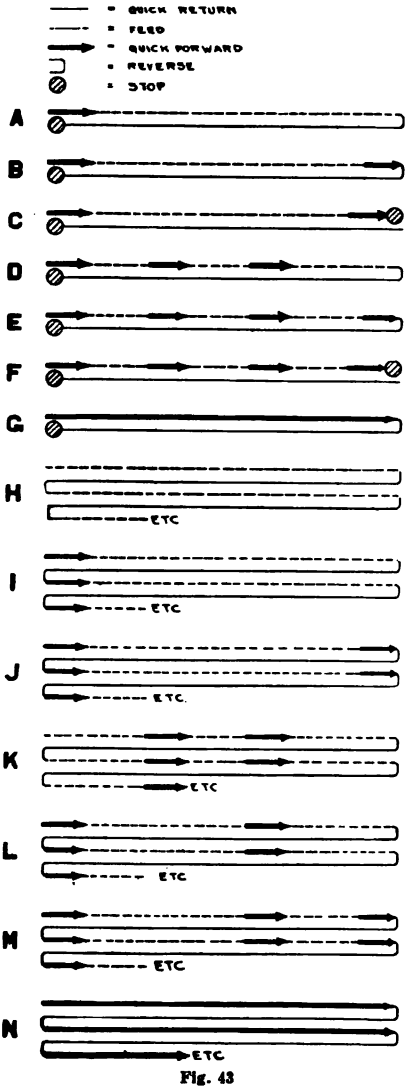

Fig. 43

Diagram showing some cycles of table movement obtainable with the Intermittent Feeding Mechanism.

The Speeds. A choice of one of 24 spindle speeds is offered, and the gears which furnish this one speed, when reversed, will also give an additional speed in that same series. The three series of speeds and the gear arrangements are shown in Table A, with reference to Fig. 41.

FOR EXAMPLE. If the machine is geared for 62 revolutions, reversing the gears will give 212 revolutions; or, if geared for 103 revolutions, reversing the gears will give 127 revolutions, and so on. The change gears are the same for each series. For example, gears that will give 31 revolutions in the low series will give 49 revolutions in the standard series and 110 revolutions in the high series. But extra back gears are required for each additional series. The arrangement of the spindle drive gearing is shown in Fig. 41, and the arrangement of this same gearing for reverse speeds is shown in Fig. 42.

The Feed. The feed movements of the machine are operated in the cycles shown in Fig. 43. The fundamental cycles are:

1. Forward quick to the work, feed across the work, automatically stop spindle, automatically reverse and return to starting point with spindle stationary.

2. Forward quick to the work, feed across the work, quick forward to clear and automatically stop both feed and spindle. Then, when the work has been removed, the table may be returned quickly to the starting point by shifting the lever on the feed box.

In both of the above cases the stopping of the spindle is automatically accomplished by tripping and applying a brake. In all cases, after the work is chucked, the main starting lever starts both feed and speed simultaneously. Under no conditions can the feed be engaged with the spindle stationary.

3. If it is desired to chuck a string of pieces on the table, dogs can be provided to produce an intermittent forward movement, by which the space between pieces is automatically traversed at the rapid rate of 100″ per minute. This can be repeated for as many pieces as there are on table.

A number of variations of the above fundamental cycles may be obtained by the use of additional dogs. A full representation of the most useful cycles is given in the accompanying diagram, Fig. 43.

We offer a choice of one of the 12 feeds provided. These are in two series as shown in table B. Feeds are given in inches per minute.

It will be seen that should a feed of 1.09″ be selected, then by reversing these feed gears, 3.87″ feed will be obtained. In the same way, reversing gears for 1.36″ feed will give a feed of 3.12″, and so on. The feed gears are the same for both series. But to use both series an extra pair of feed back gears is needed.

TABLE A—SPEEDS AND GEARS

CHANGE GEARS (Two speeds obtained with one pair of Change Gears by reversing on Studs D and C)		BACK GEARS AND SPEEDS					
		Low Series Spindle F 59T Stud D Inner Gear 18T		Standard Series Spindle F 52T Stud D Inner Gear 25T		High Series Spindle F 37T Stud D Inner Gear 40T	
		Speeds		Speeds		Speeds	
Stud D Outer Gear	Stud C Outer Gear	Gears as Shown	Gears Reversed	Gears as Shown	Gears Reversed	Gears as Shown	Gears Reversed
68 T	29 T	31	170	49	268	110	603
63 T	34 T	39	135	62	212	139	477
57 T	40 T	51	104	80	163	180	367
51 T	46 T	66	81	103	127	232	285

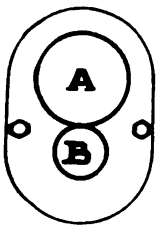

TABLE B—FEEDS AND GEARS

CHANGE GEARS (Two feeds obtained with one pair of Change Gears by reversing on Shaft A and Stud B)		BACK GEARS AND FEEDS			
		Low Series Shaft A Inner Gear 59T Stud B Inner Gear 19T		High Series Shaft A Inner Gear 31T Stud B Inner Gear 47T	
		Feeds		Feeds	
Shaft A Outer Gear	Stud B Outer Gear	Gears as Shown	Gears Reversed	Gears as Shown	Gears Reversed
27 T	51 T	1.09	3.87	5.1	18.3
31 T	47 T	1.36	3.12	6.4	14.75
36 T	42 T	1.76	2.4	8.3	11.3

The 18-inch Plain Manufacturing Cincinnati Miller with Constant Speed Drive

(Patent Rights Fully Reserved)

18-inch Plain Manufacturing Miller with Constant Speed Drive

This is a simple machine of the column and knee type, designed for the rapid production of small machine parts as used in the construction of typewriters, sewing machines, adding machines, registering machines, etc.

Evidence of its rigid construction is very clearly furnished by the illustration. The drive is by single pulley, direct from the line shaft. The machine has 12 speeds, from 30 to 600 r. p. m., and four feeds, driven from the spindle, ranging from .011″ to .032″ per revolution of spindle.

Quick-Acting Operating Arrangement. The operator from his position in front of and at the left-hand end of the table controls the feed movements with his right hand. Assuming a piece of work placed in the fixture, he moves the table forward at the rate of 2¾″ per turn of handwheel until the dog hits the trip, which automatically engages the power table feed. At the end of the cut a second dog disengages the table feed and stops the table, which is then returned to the starting point, bringing the fixture immediately in front of the operator who, after a new piece has been chucked, repeats the above movements.

An analysis of these movements compared with usual practice will show that the operator's work has been simplified and many of the usual time-consuming elements are eliminated. He may move the table forward as rapidly as he wishes, and he need not slow down when he approaches the cutter because the trip removes all need of precaution.

Therefore, with the dog properly set, the work is brought rapidly close to the cutter before the power feed is thrown in, thus reducing the actual feed distance to very little more than the actual amount needed to traverse the work.

Both of the foregoing machines have proven very popular with managers because they increase output, and with operators, because they very materially reduce labor.

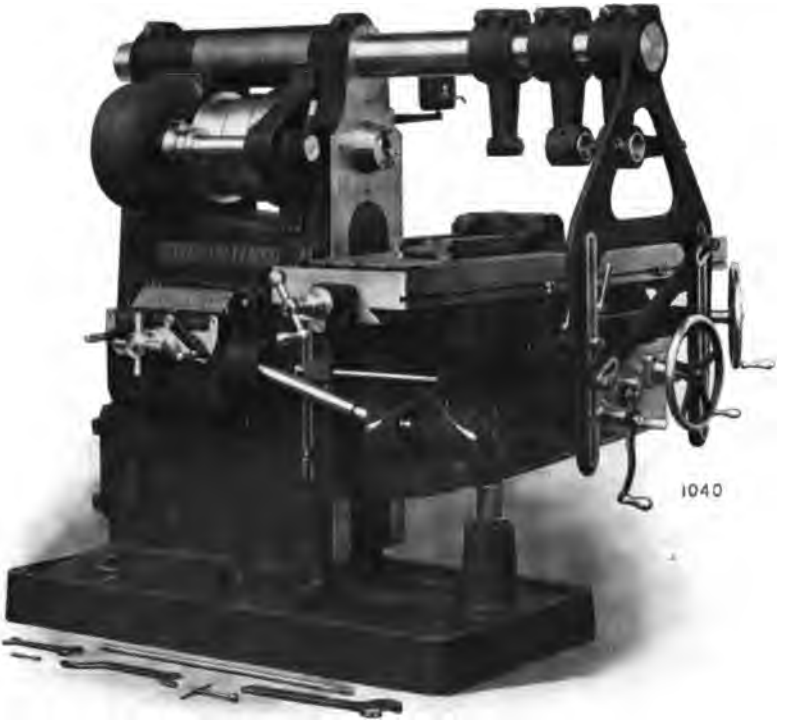

Cone-Driven Plain Cincinnati Miller

Made in Five Sizes

(Patent Rights Fully Reserved)

CHAPTER II

ERECTION, CARE AND ADJUSTMENT OF MILLING MACHINES

Erection. Although the Milling Machine is a self-contained machine, it is desirable that it be set on a solid floor. It is important that it be set level and it is best when setting up a machine to place a level on the table, and then with ordinary shingles, wedge under the base until the table shows level. Shingles should then be driven under the base all around so that the weight of the machine will be distributed over the entire base.

The Countershaft. The Countershaft for Cone-Driven Machines, Fig. 44, should be placed as nearly as possible directly over the machine in order that the belt will clear the overhanging arm. Care must of course be taken to insure that the countershaft is level and in proper alignment with the machine. The construction of the countershaft will be clear from Fig. 45.

Fig. 44. The Countershaft

It is of the disk clutch construction and always has a driving capacity considerably in excess of the power required by the machine. When wear does take place it is easily adjusted. The clutch disk is placed on the shaft so as to face the disk on the pulley. The holder for fingers is screwed to the body of the disk, the ends of the fingers reaching over the disk on the pulley. Wear is taken up by first loosening the clamping screws and then screwing the holder for fingers

on the clutch disk away from the pulley. Make sure that the screw is again tightened after the adjustment has been made, to insure that the holder for fingers will be tightly locked to the clutch disk.

Fig. 45. Detail of Countershaft Clutch

Constant Speed Drive High-Power Machines are not furnished with a countershaft, but are driven direct from the line. Care should be taken when belting up the machine to be sure that the pulley runs in the direction indicated by the arrow on the pulley. A suitable pulley should be placed on the line shaft to drive the machine pulley at the proper speed. In determining the size of this pulley, follow this rule:

Revolutions of machine pulley multiplied by the diameter of machine pulley, divided by the revolutions of line shaft, equals diameter of pulley on line shaft.

FOR EXAMPLE. Assuming a line shaft running 200 r. p. m. and a machine pulley 20″ diameter running 325 r. p. m. Then, we have—

$$\frac{325 \text{ r. p. m.} \times 20}{200} = 32\tfrac{1}{2}''$$ for the diameter of the pulley on the line shaft.

This same rule, of course, applies when determining the size of the pulleys on the line shaft when driving a countershaft, except in this case we multiply **the speed of the countershaft** by the diameter of its pulley and divide by the revolutions of the line shaft.

Oiling. It is important that a Milling Machine be well oiled. We advise the use of a good grade of mineral oil. On all our machines the oiling places are plainly marked and those places provided with

oilers are all in plain sight. The operator should acquaint himself with all of them and be careful not to neglect any.

On our High-Power Machines sight-feed oilers are used for the important bearings, and most of the mechanism is oiled from central oiling places. These should be filled once a day. The table bearings are oiled through oil holes provided on the front and rear sides of the table. To oil the inside parts of the saddle, bring the zero line on the table over each one of the three lines on the saddle and in each case oil **through the oil hole over the zero line on the table.** Be sure to keep the table in each of these positions long enough to give the oil time to pass through the tube to the place to be oiled.

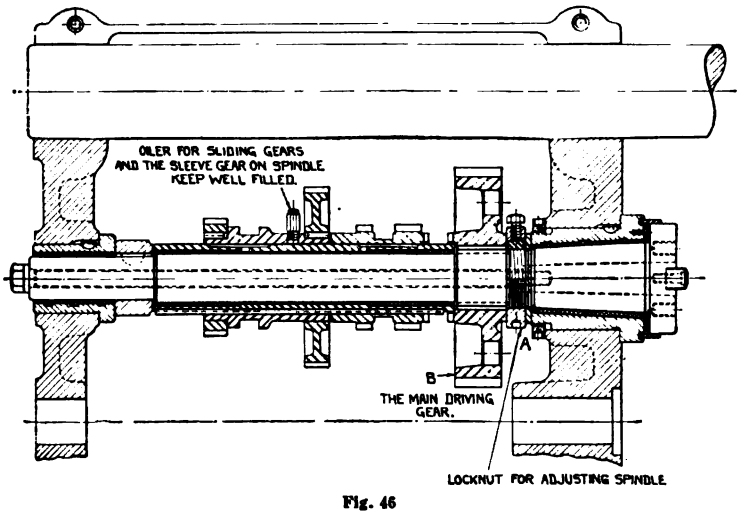

Fig. 46

Section through driving gears and spindle of a High-Power Machine.

To Remove the Spindle from the Machine. This is an operation that is rarely necessary. When, after long and hard use, extensive overhauling makes this advisable, it is only necessary to loosen the lock nut on the Spindle, Fig. 46, at the same time driving the spindle forward. After the spindle has passed through the main gear at its front end on both Cone-Driven and High-Power Machines, it will come out freely.

Adjustments. The machine spindles are tapered at the front end, and are so proportioned that under ordinary service the wear on the end thrust collars and on the spindle bearing proper is about equal, so that by screwing the lock nut on spindle against the front

box, the spindle is drawn into its taper bearing to proper adjustment. All machines are properly adjusted before they leave the factory, and this adjustment is seldom necessary. When the spindle adjustment has been properly made, the machine should again run without further adjustment for a number of years.

The white metal thrust bearing of the spindle rests against thin washers of hard paper. By removing some of these or adding additional ones, as the case requires, an independent adjustment of the thrust bearing can be made when excessive continuous service on one kind of work may make this advisable.

Adjusting Knee, Saddle and Table Bearings. These bearings are all provided with taper gibs. The table and knee gibs are adjusted endwise by means of a substantial screw and should be kept snug so as to take up all play, keeping these members in the condition of a good sliding fit. The knee gib on High-Power Machines is no longer provided with clamping levers and if kept in proper adjustment, it will be found that the machine has greater solidity between the knee and column than can be obtained by any system of locking or clamping levers.

Operating Levers on High-Power Millers. The operation of Cincinnati High-Power Millers is the same for all types—Plain, Universal and Vertical. The important operating levers are indicated in Fig. 47.

To Use the Table Feeds. Throw in the lever for the table feed gear train and then start and stop the feeds by the table feed operating lever. To feed to the left, move the lever towards the left, and to feed towards the right, move the lever towards the right.

To Use Cross Feeds. Throw out the lever for table feed gear train and set the lever for cross feed gear train to the position marked "cross feed" on front of knee. Operate the cross feed by operating lever at side of knee.

To Use Vertical Feed. Throw out the lever for table feed gear train and set the lever for vertical feed to position marked "vertical feed," on front of knee. Operate the vertical feed by operating lever at side of knee. Move lever up to feed up, and down to feed down.

To Change the Spindle Speeds. Stop the machine. Read from speed plate the lever positions for the speed wanted; for example,

115 revolutions requires lever positions 3-BC. Turn the pilot wheel to the left as far as it will go. Then move it along until the detent drops into the hole under 3; then turn pilot wheel to the right until you feel the gears come together; then press on the treadle lightly, which will revolve the gears slowly, at the same time turn the pilot wheel right as far as it will go, and finally pull it home tight. This sets and locks the tumbler.

Next, move the levers "B" and "C." If the gears interfere, press lightly on the treadle and they will go into place. It is best to press on the treadle just hard enough to start the gears. The position of the operator when speed changing is shown in Fig. 48.

To Change the Feeds. Change the rate of feed by means of the levers and pilot wheel on feed box in the same way as the speed changing is done. Do this while the machine is running. You need therefore not use the treadle.

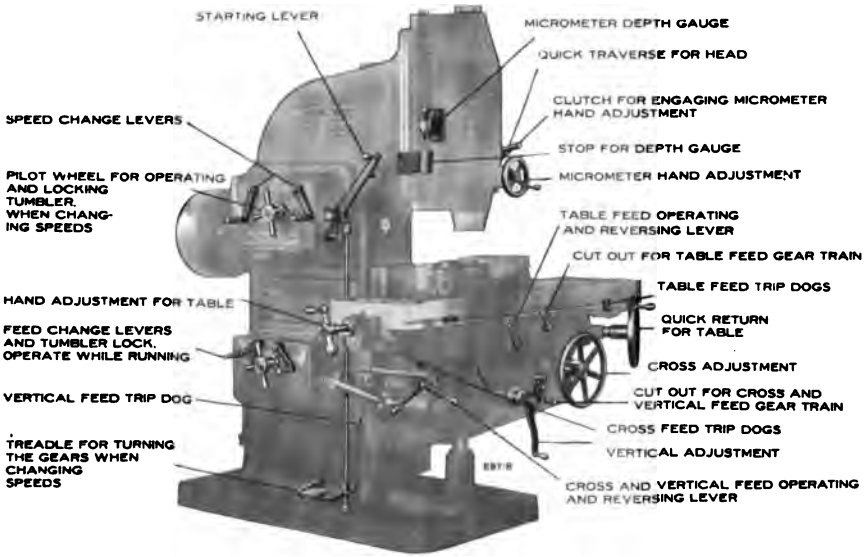

Fig. 47

Arrangement of operating levers.

Before engaging either table, cross or vertical feed, it is always desirable to see that the handwheel on the end of the lead screw, cross screw, or vertical adjusting screw, is disengaged from the clutch, as otherwise, the sudden rotation of these handwheels may cause injury to the operator.

Safety Pins. The feed mechanism of all Cincinnati Millers is provided with a safety pin, which will shear when the machine is overloaded with too heavy a feed before breakage occurs in any important part of the feed mechanism. A number of these pins are supplied as part of the regular equipment with the machine. The bushes in which these pins are located will be found just outside the reverse box on the left-hand side of the knee on the High-Power Machines, and just outside the feed bracket on the right-hand side of the column of the Cone-Driven Machines. Instructions for removing the sheared and inserting fresh pins will be found on the envelope containing the pins, which accompanies the machine.

Adjusting the Clutch of High-Power Machines. This friction clutch may be set so that it will slip when very delicate cutters are used, and can also be set up so firmly that it will transmit the maximum horsepower that the belt can supply. To adjust this clutch, remove the cover from the end of the main driving pulley, release the clamping screw which holds the large threaded finger carrier, and screw up in a right-hand direction until the proper degree of friction is obtained. Tighten up the locking screw and replace the cover.

Care of the Machine. The machine should be kept clean. This point can not be emphasized too strongly. The continued accuracy and durability of the machine depends upon this more than on any other one thing. All oil holes should be kept closed, and it is advisable when oiling to first wipe iron dust and chips away from oiling places before inserting the oil can. After a bearing has been allowed to run dry due to insufficient or improper oiling, and has become cut, any amount of flooding with oil will not improve its condition. It is best, therefore, to exercise proper care in the first place.

When oil holes or oil tubes become clogged with gummy oil they should be thoroughly flushed with gasoline. This will not injure the bearings, but will have a cleansing effect which will insure that all bearings will again get their full supply of clean oil.

The machine should never be taken apart unless absolutely necessary, and then the work should be done by a competent man who has first familiarized himself with the construction of the machine. To remedy some temporary trouble, it seldom is necessary to take any great portion of the machine apart. For example, trouble due to an improperly oiled bearing may always be located

by turning the various members of the mechanism by hand until the injured member is located. By bearing these things in mind a great deal of the time and trouble required to dismantle a machine may be saved.

The careful workman will see to it that wooden coverings are provided for the front of the knee and the top of the table, so that he may place work or tools on these parts without injury to the slides or to the upper surface of the table. Attention to this will do much to maintain the original accuracy of the machine.

When ordering repairs always give us the construction number and letter stamped on the front face of the column immediately below the front box of the machine. Also, specify the part wanted by number. We have for some time past numbered every part entering into the construction of our machines, and these numbers are placed where they are not liable to be obliterated by wear. By specifying the part number in each case, making replacements will be very much facilitated.

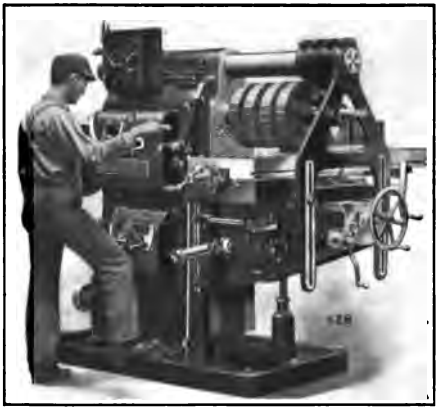

Fig. 48. Position of Operator when Changing Speeds

He moves the lever as far as it will go and then by gently pressing on the treadle the gears slowly turn and will go into position.

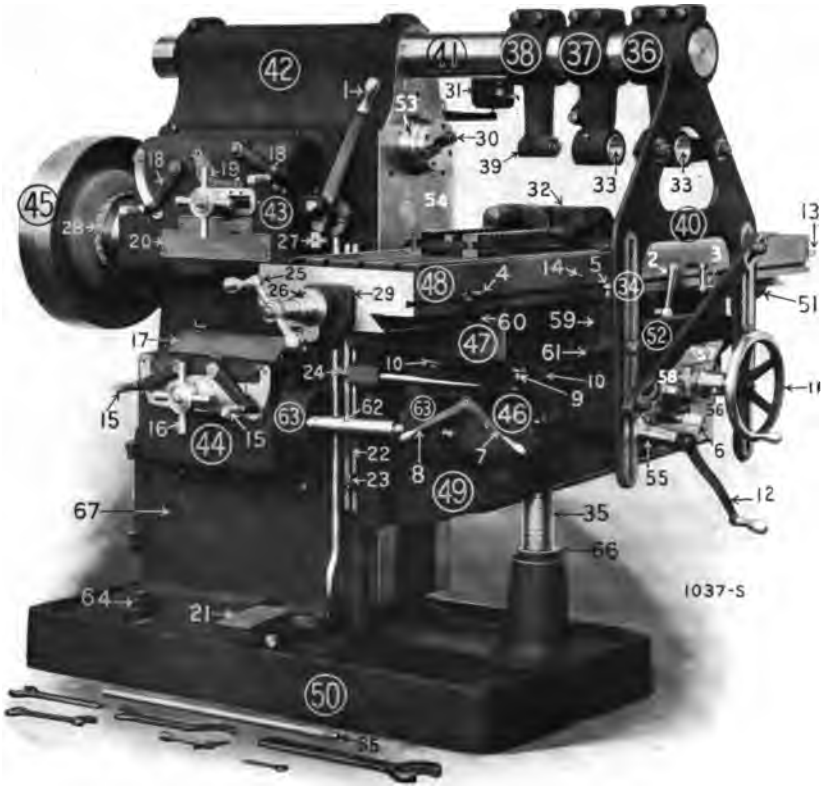

Fig. 49

Names of Parts of Cincinnati High-Power Plain Millers and Their Use

These illustrations show the location on the machine of the different parts referred to in this book. They will contribute to a better understanding of the machine and also facilitate ordering repairs. Numbers in circles are on the part to which they refer, or they are directly over that part when it is concealed.

1. Clutch lever for starting and stopping machine.
2. Table feed setting lever.
3. Power quick traverse operating lever.
4. Table feed adjustable trip dogs.
5. Table feed trip plunger.

6. Cross and Vertical feed setting lever.
7. Vertical and cross feed lever.
8. Lever for operating feed when standing behind the table.
9. Cross feed trip plunger.
10. Cross feed adjustable trip dogs.
11. Cross adjustment handwheel.
12. Vertical adjustment crank.
13-14. Quick traverse limit stops.
15. Feed change levers.
16. Pilot wheel for operating feed change tumbler.
17. Feed index plate.
18. Speed change levers.
19. Pilot wheel for operating speed change tumbler.
20. Speed index plate.
21. The treadle for giving the gears slight motion to facilitate speed changing.
22. Guide for Vertical feed trip dogs.
23. Vertical feed, adjustable trip dogs.
24. Vertical feed trip plunger.
25. Ball crank for longitudinal table adjustment.
26. Micrometer dial for longitudinal table adjustment.
27. Rack on main clutch rod.
28. Quick traverse driving belt.
29. Bracket containing left-hand bearing for table feed screw.
30. Driving keys in flanged spindle end.
31. Oil pot.
32. All steel vise.
33. Bushings in arbor bearings.
34. Table feed operating lever (concealed behind the braces in Fig. 49. See Fig. 50.)
35. Telescopic elevating (Vertical feed) screw sleeve. The Vertical screw (35-A, Figs. 50 and 51) is inside of this sleeve.
35-A. Vertical feed screw (Fig. 50).
36. Outer arbor bearing support which can be bolted to the braces.
37. Intermediate arbor bearing support.
38. Outer support, for short arbors having a bearing on the outside of the nut. (Arbors style A, B, C, G, page 84.)
39. Adjustable bronze bush for arbor bearing.
40. Braces for tying the overarm, outer arbor support and knee together.
41. Overarm.

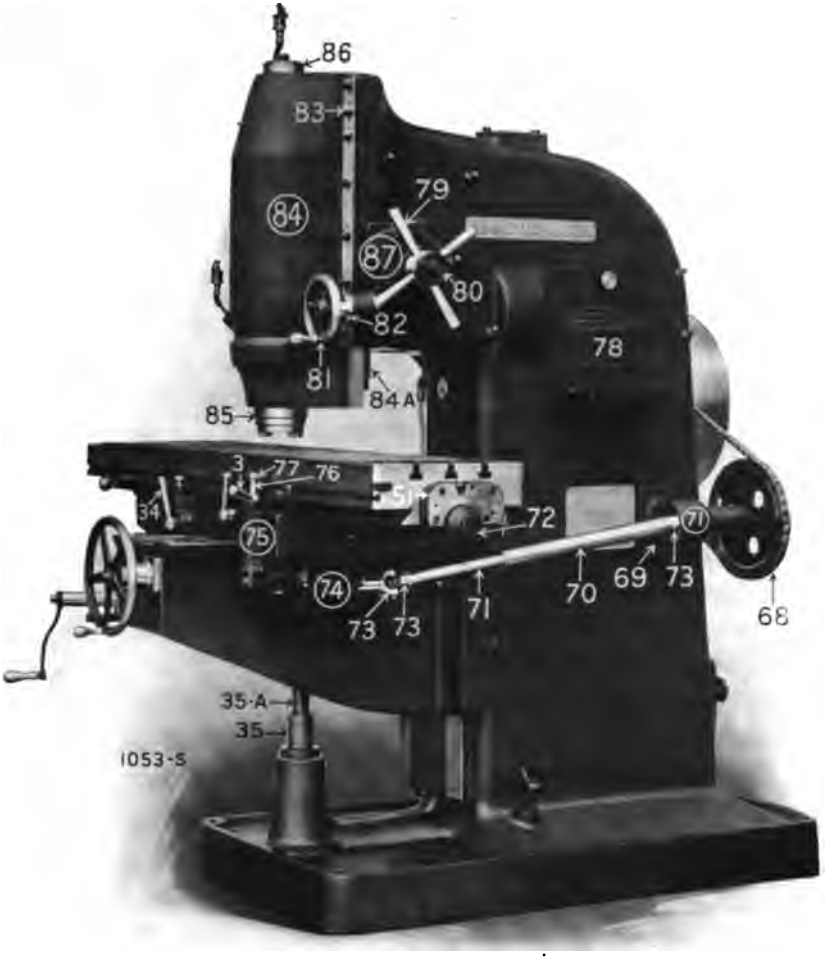

Fig. 50

42. Column of the machine.
43. Drive box.
44. Feed box.
45. Driving pulley.
46. Feed reverse box.
47. Saddle.
48. Table.
49. Knee.
50. Base.
51. Bracket containing right-hand bearing for table feed screw.
52. Bridle by which the braces are fastened to the knee.
53. Front spindle bearing box.

54. Front face of column where the construction number and letter will be found. Always give us this number and letter when ordering attachments or repairs. It identifies the machine.
55. Micrometer dial for vertical adjustment.
56. Micrometer dial for cross adjustment.
57. Front sliding covers in top of knee. Back sliding covers corresponding with these can not be seen.
58. Cross screw bracket at front of knee.
59. Trip plunger bracket.
60. Adjustable gib for table bearings.
61. Adjustable gib for saddle bearings.
62. Telescopic Universal joint shaft (long fork).
63. Universal joints (short forks and ball in fork). The short fork connecting with the shaft in reverse box has a flange which carries the shearing pins (safety fork).
64. Oil pump connection with tank which is in the base of the machine.
65. Ejector rod.
66. Vertical feed nut on base of machine.
67. Location of oil pump when furnished.

The following parts are shown in Fig. 50:

68. Power quick traverse pulley.
69. Quick traverse bracket on column.
70. Long fork on quick traverse shaft.
71. Extension shaft, quick traverse.
72. Cover over end of lead screw. (Remove when setting up for cutting spirals.)
73. Short forks of Universal joints. (These are identical with the forks used for driving the feed.)
74. Quick traverse bracket under saddle.
75. Quick traverse operating lever bracket.
76. Quick traverse lever shaft.
77. Quick traverse safety lever.
78. Cover over driving gears. (Remove when oiling inside parts.)

Additional Parts Applying to Vertical Machines Fig. 50

79. Pilot wheel for quick adjustment of spindle (6″ per turn).
80. Knob for engaging hand feed movement.
81. Handwheel for hand feed movement.
82. Micrometer dial for hand feed movement.

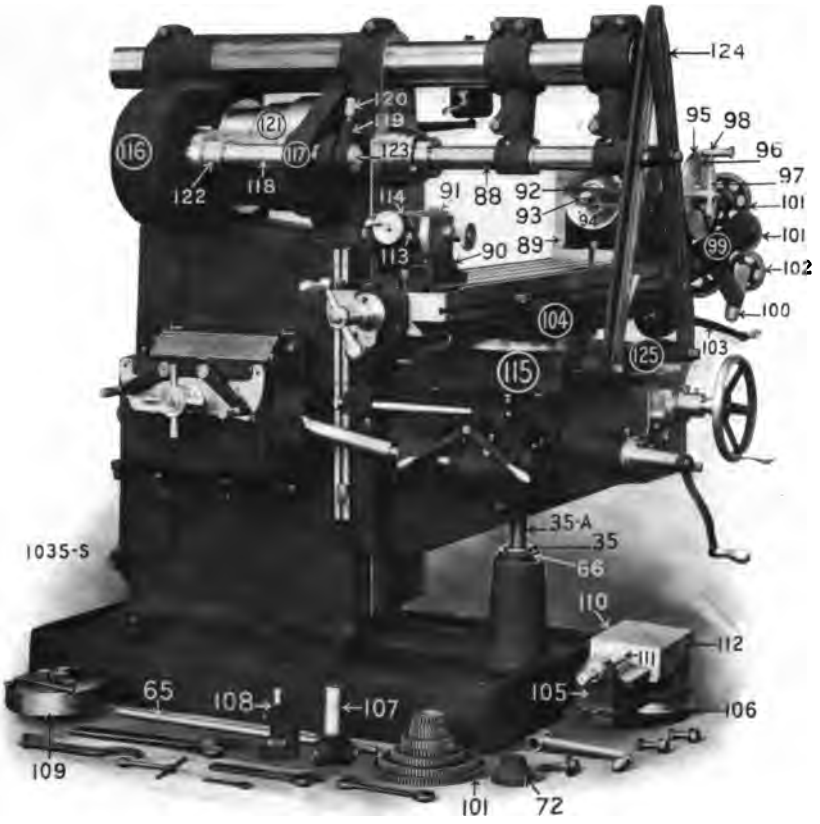

Fig. 51

83. One of four bolts for clamping spindle head solidly to frame of machine for heavy work.
84. Spindle head.
84-A. Rack for adjusting spindle head.
85. Lower spindle bearing box.
86. Upper spindle bearing box.
87. Head adjustment worm casing.

Additional Parts Applying to Universal Machines Fig. 51

88. Arbor.
89. Universal Indexing and Dividing Head.
90. Tail stock.

91. Elevating center for tailstock.
92. Front index plate on spindle for direct indexing low numbers.
93. Head center.
94. Driver for dog.
95. Side index plate. Drilled both sides, reversible.
96. Sector for convenience in indexing.
97. Index pinholder.
98. Index pin (in the holder).
99. Segment for change gears. (This segment with a complete set of change gears constitutes a Driving Mechanism.)
100. Swinging arm or bracket for idler gear.
101. Change gears for cutting spirals (12 in a set).
102. Idler gear.
103. Quick return crank handle.
104. Swivel carriage or housing.
105. Vise body.
106. Swivel base for vise.
107. Holder for adjustable bronze bush for outer arbor support. (This is substituted for the large bearing holder in the intermediate arbor support.)
108. Steady rest.
109. Universal Milling Machine chuck.
110. Vise housing.
111. Vise screw.
112. Vise jaws.
113. Swivel block in tailstock.
114. Tailstock center carrier.
115. Saddle of Universal Machine.

Additional Parts Applying to Cone-Driven Machines

116. Cover over back gears.
117. Cover over back gear pinion.
118. Back gear quill.
119. Back gear operating lever.
120. Back gear locking pin.
121. Driving cone.
122. Back gear sleeve.
123. Back gear shaft.
124. Braces as used on Nos. 1, 2 and 3 cone-driven machines.
125. Bridle for attaching braces to knee.

Cone-Driven Universal Cincinnati Miller

Made in Four Sizes

(Patent Rights Fully Reserved)

CHAPTER III

UNIVERSAL TOOLROOM MILLERS

The term "Universal" designates a Miller especially designed for automatically milling spiral forms.

This, in addition to its equipment for cutting spur, mitre and bevel gears, and doing a general line of indexing and other work that is held between centers, makes the Universal Miller the generally accepted toolroom machine.

Such machines have the table mounted on a swiveling carriage, permitting the work held between centers to be set at an angle with the cutter to suit the spiral being milled.

Their equipment includes a Universal Dividing Head, change gears, chuck, etc. These two particulars, viz., swiveling table and Dividing Head equipment, constitute the only difference between Universal and Plain Millers.

The development of modern machinery has brought with it the use of spiral gears of wider angles than that to which the table of a Universal Miller can be swiveled.

To meet these requirements we brought out our Spiral Milling Attachment some years ago to increase the range of Universal Millers to take in this work. Since then we have arranged our Plain Millers so that they can be used with the Dividing Head geared to the table feed screw for generating spirals, the same as Universals. By adding to this equipment the Spiral Milling Attachment, Cincinnati Plain Millers will cut spirals of greater angle than can be cut on any Universal Miller with regular equipment.

Fig. 52. Plain Miller Equipped for Cutting Spirals

In recent years Plain Millers have been coming into more general use as toolroom machines than formerly, it being recognized that only a portion of toolmaking consists of spiral work and for all other purposes the Plain Machine has the advantage of greater rigidity. For a small toolroom using only one machine, it is customary to select a Universal. Additional machines may be Plain or Universal in proportion to the amount of spiral work to be done. It should be borne in mind that our Plain Millers are made to the same close limits of accuracy as our Universals.

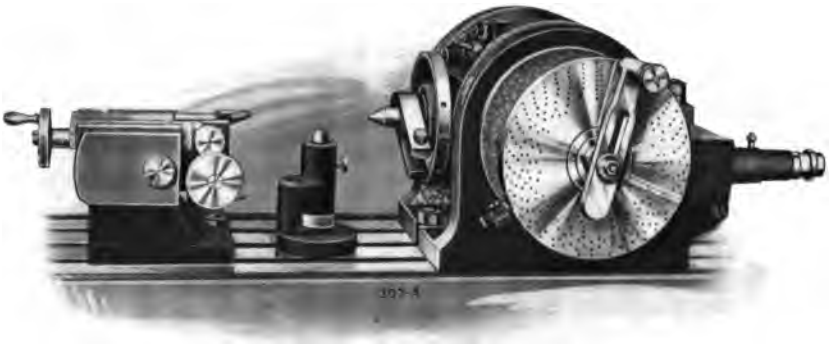

Fig. 53. The Dividing Head
This is the most important feature of a Universal Miller

Toolroom machines are not often required to do heavy cutting. Extreme accuracy is more essential than great power. But in order to produce accurate results, it is essential that all the working parts of these machines be as rigid as it is practical to make them. This is especially important in regard to the large sliding members of the frame—such as the table, saddle, knee and column. On our machines these are constructed on the enclosed box principle, all as detailed in the preceding pages describing Plain Machines.

We have based our design of each of these members on a definite knowledge of the nature of the strains to which it is subjected.

The Dividing Head

A modern, powerful Universal Miller is severely handicapped unless it is equipped with a Dividing Head that is strong enough to do work commensurate with the capacity of the machine itself.

The construction of ours is shown below. The worm and wormwheel are unusually large, and when, after long service, wear does take place, it can be quickly taken up by means of the adjusting screws shown in Fig. 55. These screws are made accessible by simply removing a cover which encloses the worm casing. Thus the adjustment can be made when necessary without taking the head apart, and in the same manner and to the same degree of nicety as it is done in our shop when the heads are first assembled and tested. The adjustment for wear is made in a straight line perpendicular to the axis of the wormwheel, the worm casing being confined between two parallel vertical walls shown in section in Fig. 57. Repeated adjustments do not throw the worm and wormwheel out of alignment, and therefore do not affect the accuracy of the mechanism.

Fig. 54

The work spindle is large in diameter and its bearings are adjustable for wear. It is provided with a clamping device, Fig. 58, by means of which it can be firmly locked during cutting operations without disturbing the accuracy of the spacing. This relieves the worm, the wormwheel and index pin from all strain, thereby avoiding unnecessary wear.

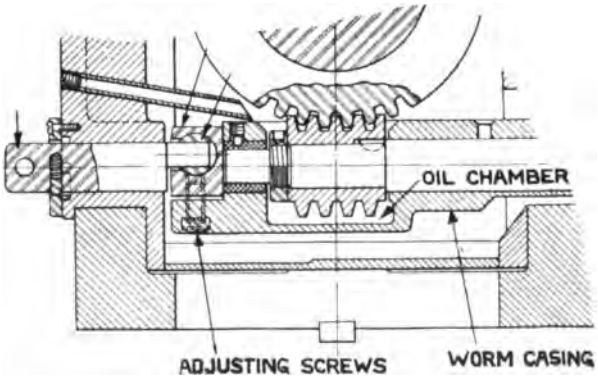

Fig. 55

It will be noted that the front bearing TAPERS TOWARD THE FRONT END. The effect of the clamp therefore is to take up whatever play

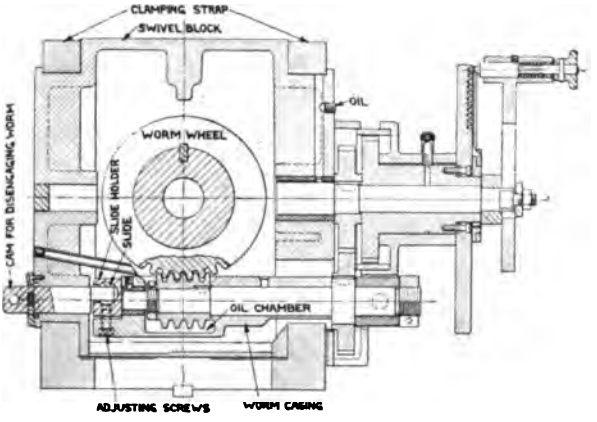

Fig. 56

exists by pushing the spindle forward in its bearing and thus bringing it into perfect alignment before actually clamping it.

The spindle may be set at any angle from 5° below the horizontal to 50° beyond the perpendicular position. The swiveling block is

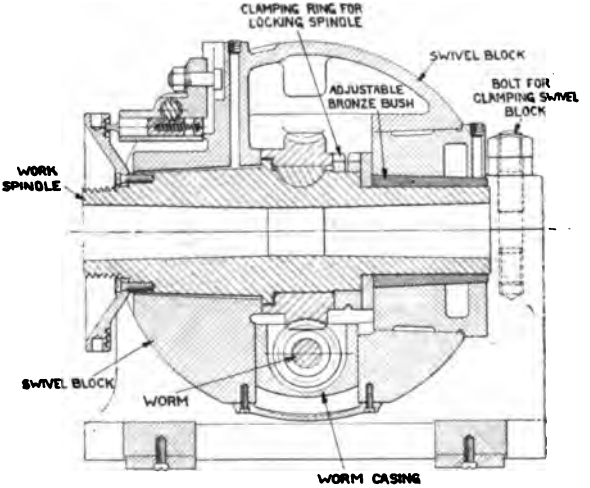

Fig. 57

graduated about its circumference and provided with a vernier reading to five minutes, or $1\frac{1}{2}$ of a degree. The swiveling block swings on large trunnions ($6\frac{1}{2}$" diameter on 10" head and $8\frac{1}{2}$" on 12"

and 14″ heads), clearly shown in the illustrations, and may be held rigidly at any angle by clamping the large trunnion bearings by simply tightening two cap screws. The rigidity with which the clamps hold the trunnions is carefully tested, Fig. 59, on each head as soon as the swivel block and clamps have been fitted.

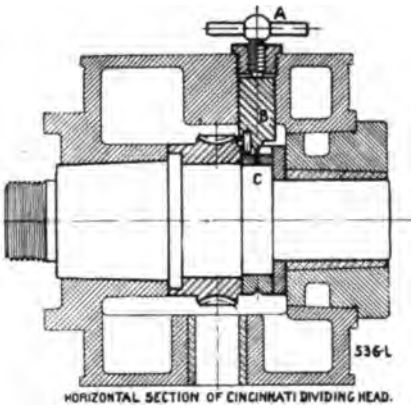

Fig. 58

The spindle clamp consists of a split ring, C, which is spread by the wedge B by tightening the screw A, thus clamping the spindle endwise, securely, without crowding it out of alignment.

Every head must carry 600 pounds 22 inches from the center of the swivel without any evidence whatever of failure on the part of the clamps to rigidly hold the swivel block in position.

Fig. 59. Test of Rigidity of Clamps

Note the simplicity of our clamp: the large clamping surface; and that the swivel bearing is completely protected. This insures that it will not become injured so as to destroy the alignment of the head.

In addition to cutting spirals, the Dividing Head is especially adapted for bevel and mitre gear cutting as described in the special chapter on that subject.

Work of this sort should always be done with the Dividing Head spindle set at an angle away from the direction of the cut, so that any springing that may result from the small arbors that the nature of such work often requires, will be away from the cutter and prevent its gouging in. This requires that the spindle be set past the vertical position. Ours can be set to 50°. It also requires a head of the greatest rigidity. The details of ours are all very large, and the test on the preceding page shows how securely our spindle is held.

The Dividing Head Tailstock. The tailstock has an adjustable center bar which may be raised and lowered through rack and pinion. It is carried in a slide which can be swiveled to 10° above or below the horizontal to bring the centers in line with the center

Fig. 60
An example of accurate indexing.

of taper work. It is so constructed that the cutter can pass over it without injury when set at an angle. It is provided with two centers, one for small light work and the other for heavy work, and may be reversed to bring either in position.

The centers are carried in a massive slide which has V-bearings in the housing. The clamping bolt passing through the latter serves as a journal about which both the housing and the slide carrying the centers revolve.

TEST SHEET FOR DIV. HEADS

	Maximum Error Allowed	Test in Thousandths
Center runs true on point	.0025"	.0002.5"

Shop Order 7002 Size 12" Div. Head Number A2-6490
Date Assembled February 21 1916
Assembler's Number 423 Name R. Engel
Date Inspected 2/21/16 Inspector Pappelmeier 389-6

Fig. 61
Test of accuracy of Dividing Head Center.

Some Evidences of Dividing Head Accuracy. The accompanying dividing head test records were drawn at random from our files. They represent average accuracy. They are only a few of the many similar tests which every one of our Dividing Heads must pass.

We call special attention to the indexing test. This puts our regular product in the same class with instruments of precision.

We are able to accomplish this because of special worm and wormwheel generating machines and other special tools which we have developed for this work alone.

Fig. 60 is an example of the accuracy of our index mechanism. Six 1″ diameter holes are spaced equally on a circle 14½″ in diameter. They are first drilled, then bored to size. The maximum radial error is less than two ten thousandths (.0002) inch, and the maximum chordal error is less than three-quarter thousandths (.00075) inch. The radial measurement is made from the centrally placed standard plug gauge and read from the lead screw dial in the usual way and finally checked with micrometer calipers.

This extreme chordal accuracy (that is, the accuracy from hole to hole) results directly from the accuracy of the 12″ index

TEST SHEET FOR DIV. HEADS

	Maximum Error Allowed	Test in Thousandths
Spindle in line with tee slot in table at center end of 12" test bar	.001"	.0005"
Spindle central with tee slot in table front or back	.002"	.001"

Shop Order 7002 Size 12" Div. Head Number A2-6490
Date Assembled February 21 1916
Assembler's Number 423 Name R. Engel
Date Inspected 2/21/16 Inspector Pappelmeier 389-6

Fig. 62
Test of accuracy of alignment

head on which the work is done. The data given with the indexing test show why our index heads can do such work.

Accurate indexing can not be done, no matter how accurate the index mechanism, unless the dividing head is made to close limits in other particulars. To give a better understanding of the care we take in testing out each part, a few of our methods are shown.

If the center does not run true you can not do accurate work of any kind between centers. Ours are all tested by revolving the spindle with the indicator resting against the point of the center, Fig. 61.

This test is repeated after the center has been removed, turned part way around and replaced. The record shows a total error of one-quarter thousandth (.00025) inch, that is, one-eighth on each side of the true position—too small an error to affect work usually done on a Miller.

The alignment test, Fig. 62, insures that their spindles are in close alignment and central with the T-slots of the Miller table.

Readings taken along one side of the 18″ test bar show the parallel relation with the T-slots. The central relation with the T-slots is shown by the difference between readings on both sides of the test bar. The record shows a total "error found" of one-thousandth (.001) inch in each case. That's accurate enough for the most exacting requirements.

Fig. 63
The indexing test.

Fig. 63 shows how the indexing accuracy of the wormwheel is tested in the finished head. The disk contains an accurately graduated silver ring. By means of a microscope with a micrometer adjustment, we can read the errors in the wormwheel and also those in the worm, to one-fortieth of a thousandth (.000025) of an inch; not only the errors in pitch, but also the inaccuracies of the tooth face. Every Cincinnati Dividing Head is so tested, a record being kept.

A piece of accurate indexing is shown in Fig. 64. Thirty-six holes, ¼″ diameter are spaced on the periphery of a 19″ disk, rigidly held on a 12″ index head. They are first drilled and then bored a

trifle under size, and finally reamed to a plug gauge fit with a specially ground ¼″ end mill. The error between holes is less than one thousandth (.001) of an inch. In addition to illustrating the accurate results that can be obtained, this also shows the best method of handling work of a larger diameter than the index centers will swing.

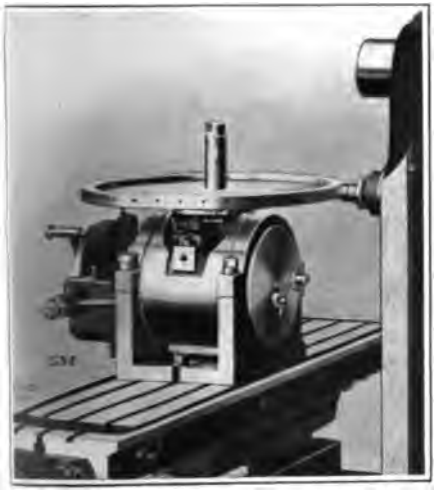

Fig. 64

Fig. 65 shows the use of the Dividing Head for indexing a drill jig. This jig has 12 holes distributed over all of its sides. Some are radial, and some are at an angle. By holding it between centers, the spacing and the angles are obtained by a combination of movements; circumferentially, by indexing; at an angle with the radius by indexing and vertical adjustment; and lengthwise by means of the lead screw. The lengthwise and vertical measurements are checked by micrometer calipers in the usual way. They show an accuracy within one-half thousandths (.0005), inch but the accuracy of the circumferential spacing results entirely from the accuracy of the index, and comes within one-tenth of a degree or six-tenths of a thousandth (.0006) inch on this diameter of 7″.

Fig. 65

Fig. 66 shows a piece of work that requires a machine that is not only extremely accurate, but must be in correct adjustment throughout. The disk is 18″ in diameter when finished and has five slots evenly spaced. The sides of the slots are radial and must be finished individually. The maximum variation in the distance between slots is not over one thousandth (.001) inch.

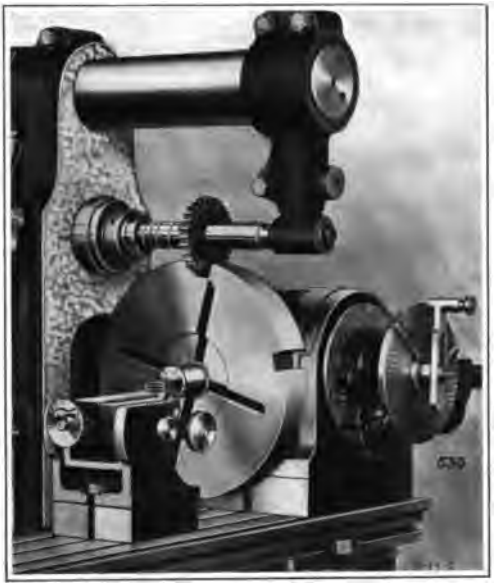

Fig. 66

Care and Use of the Dividing Head

The preceding illustrations show that the Dividing Head is in reality a precision tool. We go to unusual expense to make it accurate, and this is a large factor in the cost of the Universal Machine. But all this accuracy and refinement can be lost in a short time if the Dividing Head is not properly taken care of. It should be kept well oiled with a good grade of mineral oil. It should be kept clean and it should never be placed on the floor, but a suitable bench or shelf should be provided for it. In fact, when not in use, it should be given the same care and protection that is given other precision tools, gauges and instruments.

Even the most accurate Dividing Head will not produce accurate work unless the conditions under which the work is done are correct. For instance, it sometimes happens that a gear is to be cut very accurately and dependence is placed on the Dividing Head alone, without taking proper care that the machine is adjusted, that the work is held properly, that the cutters are in good condition, etc., resulting in disappointment in the finished piece of work. In such cases the blame may very often be improperly attributed to the Dividing Head.

Where to Look for Cause of Errors. An understanding of those things which cause inaccuracies will readily point the way to a remedy. We have had complaints in which the proof submitted to show the inaccuracy of the Dividing Head was that after the gear had been cut, the cutter would not pass through the first space without removing metal from one side or the other. When we remember, that after having indexed through a full revolution, exactly the same points of the indexing worm and wormwheel are in contact that were in contact when the first slot was cut, it is evident that no matter how inaccurate these members might be the piece of work will come back to exactly the same position in relation to the cutter. It follows therefore, that the conditions above mentioned are positive proofs not of inaccuracies of the Dividing Head, but that the trouble is somewhere else. Either the work slipped on the mandrel; the mandrel did not run true; the driver had play; the milling machine was out of adjustment; the indexing had not been properly done; or, the cutter was dulled on one side.

The Milling Machine spindle must be in close adjustment endwise; otherwise, its end motion will change the relation between the cutter and the centers of the Dividing Head and produce inaccurate work. The same thing will happen if the table gib is not properly adjusted. The usual result of these faults is thick and thin teeth in the gear being cut. If the work slips on the mandrel, accurate work can not be produced and the same is true if there is any play between the dog and the driver. In the same way, it must be clear that if the mandrel does not run true on centers, the gear blank will wobble and this wobbling may be sufficient to cause greater errors than are permissible on the finished work. If the cutter is dull, especially if it is duller on one side than on the other, it is likely to crowd the work sufficiently to produce inaccuracies for which neither the Dividing Head nor the machine is to blame.

It is sometimes thought by Milling Machine users that inaccuracies in the side index plate are to blame for large inaccuracies in the finished work. This is not likely to be so, because the ratio between the worm through which the index operates and the wormwheel is 40 to 1. Therefore, the error in the finished work due to this cause can not be more than one-fortieth of the error between the holes in the index plate on a circle the same diameter as the circle on which these holes are drilled. Inaccuracies in indexing frequently result from the back lash not being properly taken up.

How to Set Up for Indexing a Gear. When an accurate piece of indexing is to be done, a Dividing Head that is in good condition should be placed on a machine that is in similarly good condition. Then care should be taken to see that the machine is in proper adjustment in all respects, such as end play in the spindle, looseness in the table, saddle or knee gibs, etc. The arbor should be in good condition and properly held in the spindle of the machine; the cutter should be placed as near the shoulder of the arbor as the work will allow, and **the cutter must be sharp.** The Dividing Head must of course also be in proper adjustment; then, with the Dividing Head in place on the machine the cutter must be properly centered with the Dividing Head center. Then, with the work securely mounted on a mandrel, which itself runs true, and properly secured between centers with no play between the dog and the driver, we are ready to proceed.

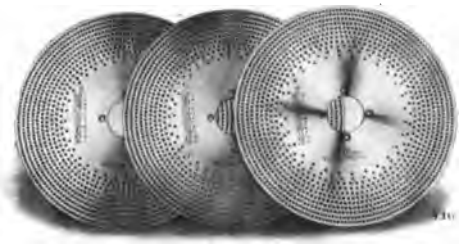

Fig. 67. High Number Indexing Attachment
For indexing prime, odd and even numbers.

The Dividing Head must be set with the indexing pointer in place for the proper number of divisions, and the sector must be set for the proper spacing, as described a little later. The Dividing Head spindle must now be clamped.

The machine should be started and the gear blank should be adjusted vertically until there is evidence that the running cutter touches it. Then it must be moved aside and the knee raised vertically for the proper depth, as shown by the dial, and we will be ready to take the first cut.

After this has been taken we loosen the clamp, and index for the next tooth making sure that the pointer moves in one continuous direction. If, by any chance, it passes the hole, we must return some distance and again come forward and let the pin touch the plate a little before it enters the hole. In this way we will be sure that all the back lash is taken up. We then clamp the spindle and proceed with the next cut, and so on.

The various methods of indexing, the use of the sector, and index tables are given on the following pages.

Indexing. There are two methods of indexing employed:

1. PLAIN INDEXING. By converting the Head into plain index centers and using the front plate and index pin shown in the illustrations. This plate has three circles of holes: 24, 30 and 36. It will index any number that divides evenly into any one of these. It is especially convenient for indexing low numbers, as when making four or six-fluted reamers, etc. It saves all the time lost by the old method of indexing through the side index plate, which requires ten turns of the pointer to make each one of the divisions of a four-fluted reamer.

To change the Head from universal to direct indexing the worm is dropped out of mesh with the worm wheel by simply turning the T-bolt shown in Fig. 55 through half a turn. The indexing is done by turning the spindle by hand. When the job is finished the Head can be set for universal indexing again by turning the T-bolt in the opposite direction. All this can be done in a few seconds. The mechanism is positive in its action and does not depend upon clamping arrangements of any sort.

2. UNIVERSAL INDEXING. This is the usual indexing arrangement by means of a plate and pin on the side of the head, but differs widely from others in the following very important feature: THE PLATE IS PLACED CONCENTRIC WITH THE SWIVEL BLOCK, bringing it on a line with the work spindle, which enables us to use an index plate very much larger ($8\frac{13}{16}$" in diameter) than is practical by any other construction.

We employ only one plate. It is drilled on both sides, and reversible, and makes an unusually large number of useful divisions because its large diameter gives room for many circles and a large number of holes in these circles, and consequently a wider range of indexing than can be done from plates of smaller diameter. They include all numbers up to and including 60, and all even numbers and those divisible by 5 up to and including 120.

The table furnished with the machine gives all divisions obtainable up to 400. This covers the requirements of most shops. It is printed in full on page 76.

If higher and prime numbers are to be indexed, the range of the index mechanism can be greatly extended by using the HIGH NUMBER INDEXING ATTACHMENT shown in Fig. 67. By using it, all indexing becomes simple indexing—no compound arrangement is necessary—no combinations of change gears need be set up to accomplish the

result—there is no complicated and bothersome chart to be consulted. All obtainable divisions are indexed direct from the plates. This can be applied to any of our Dividing Heads, Combination Index Heads and 10″ Plain Centers, and will index all numbers up to and including 200, all even numbers and those divisible by 5 up to and including 400, and make many divisions beyond. It may be added at any time at small cost. The complete high number indexing tables are printed on pages 72 to 75.

How to Calculate Indexing. The calculations by which the index tables are produced and which must be followed for determining the circle and moves for indexing numbers not given in the tables can, perhaps, be best understood by taking several practical examples which follow:

FIRST CASE: Indexing less than 40 divisions. Let us assume that a piece of work mounted between centers is to be divided into 20 equal parts. This will require $\frac{1}{20}$ of a turn of the spindle for each division, and since the ratio between worm and wormwheel is 40 to 1, this will require $\frac{40}{20}$ or two turns of the worm and, therefore, two turns of the index crank. (The gears connecting the wormshaft and the index crankshaft are equal in size.)

SECOND CASE: Indexing more than 40 divisions. Let us assume that it is desired to divide the circle into 80 divisions. This time the wormwheel will make $\frac{1}{80}$ of a turn, while the worm and index crank will make $\frac{40}{80}$ or $\frac{1}{2}$ a turn. In both of the above cases the index pointer always engages the same hole in the index plate, consequently it is immaterial which one of the even number circles of holes it is set to.

THIRD CASE: Indexing 152 divisions. We have seen from the above two cases that, since the ratio between worm and wormwheel is 40 to 1,

(RULE 1.) Forty divided by the number of divisions required will determine the number of turns or the fractional part of a turn to be made by index pointer, which we saw was two turns for 20 divisions and $\frac{1}{2}$ a turn for 80 divisions. Now, following this rule, we will divide 40 by 152, which, expressed in the form of a fraction, is $\frac{40}{152}$, of which

(RULE 2.) The denominator represents the circle to be used and the numerator represents the number of holes in this circle over which the index pin must be passed for each division.

Applying these rules to the first case mentioned we have the fraction $\frac{40}{152}$, which we need analyze no further than to say that, if the pin were in the 20-hole circle, it would pass over 40 holes, or two turns for each division. Now, referring to our present case, we find that the index plate does not have a circle containing 152 holes. It is therefore necessary to transform this fraction into an equivalent fraction whose denominator will be the same number as the number of holes in one of the circles of the index plate. It does contain a 38-hole circle. We will then transform our fraction $\frac{40}{152}$ to the equivalent fraction of $\frac{10}{38}$, by dividing both the numerator and denominator by 4. Applying Rule 2 to this new fraction, 38 is the circle to which the index pin must be adjusted, and it must move over a series of 10 holes for each one of the 152 divisions into which we are dividing our work.

FOURTH CASE: Indexing 33 divisions. Our fraction now takes the form of $\frac{40}{33}$. The plate does not contain a 33-hole circle, neither does it contain an 11-hole circle nor a 3-hole circle, and since these are the only numbers which can be evenly divided into 33, we must make our transformation by multiplying instead of dividing. We find that the plate does contain a 66-hole circle; therefore, by transforming our fraction into an equivalent fraction of larger numbers by multiplying both numerator and denominator by 2, we get the equivalent fraction of $\frac{80}{66}$, in which 66 is the circle and 80 is the number of holes over which the pin must pass for each division; but since 80 holes are more than the 66-hole circle contains, we divide 80 by 66, and find that it is contained once with 14 left over; therefore, the pointer must make one complete turn and 14 holes in addition.

FIFTH CASE: Indexing 395 divisions. Our fraction is $\frac{40}{395} = \frac{80}{790} = \frac{8}{79}$, in which case we use the 79-hole circle and index over eight holes.

The highest number that can be obtained with a High Number Indexing Attachment is 7960. Our fraction is $\frac{40}{7960} = \frac{1}{199}$. Here we must use the 199-hole circle and index one hole for each of the 7960 divisions.

The Sector. Referring to third case (page 68): In order to save counting the ten holes each time, the index plate is provided with a sector, as shown in Fig. 68. The arms of this sector may be set by loosening the screw A so as to take between them any desired number of holes. One arm rests against the index pin, as

indicated by the black hole, and the other arm is set 10 holes ahead. We must remember that the hole in which the pin rests must never be counted, for the simple reason that we are actually counting spaces and not holes. When the first division has been made the index pin is moved forward 10 holes to the arm C of the sector, and the sector itself is moved up until the arm B again strikes the index pin. This will set arm C ahead the required distance to indicate the hole into which the index pin is to drop for the next division. In moving the index pin forward it is always best to move slowly as the hole is approached and let the pin drop into place just as the hole is reached. In this way all the lost motion in the gearing is taken up. It will never do to let the pin pass the hole and then bring it back, because in this way the lost motion is not taken up and the indexing will not be accurate. Should the pin pass the hole accidentally, it must be brought back some distance and then moved forward again in the original direction and carefully placed in the hole.

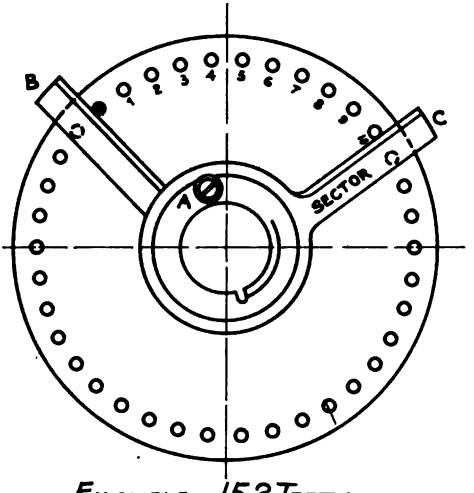

Fig. 68

Resetting Work to the Cutter—Notched Index Plate

It often occurs in toolmaking and experimental work that a piece of indexed work that has been milled must be put back into the machine for remilling. A simple case is that of a disk with teeth of some form on its periphery. If it is found that the teeth are all too thick, another cut must be taken all around the disk.

When the work has been replaced in the machine, as before, it must be revolved the proper amount to bring the spaces to the cutter for recutting. This can not be done by indexing, because it will be found that when the work is in proper relation with the cutter, the

index pin is somewhere between the holes. To meet this condition our index plate has notches in its periphery and the lock has corresponding notches, Fig. 69. By loosening the lock and holding the index pinholder stationary, the plate can be revolved until one of the holes comes to the pin. The plate may then be locked again, the lock engaging a different set of notches.

Again, it may be desired to remill indexed slots in order to cut them deeper. The problem now is to reset the work so the cutter will line up with the slots as originally cut. Here again, the final adjustment may be made by revolving the plate as in the previous case. Another very useful application of this feature is bevel or mitre gear cutting. When the blank is revolved toward the cutter, after the offset has been made, the index pin will nearly always fall between two holes. Then by revolving the plate we can bring one of the holes to the pin.

The notches are of such size that by revolving the plate the amount of one notch, a piece of work 1″ in diameter will be revolved .00017″. The diameter of any piece of work multiplied by this figure gives the amount its periphery will be revolved (that is, the amount it will move towards the cutter). For example, a piece of work 6″ diameter held between centers will be revolved toward the cutter 6 x .00017″=.00102″ for each notch that the index plate is revolved. This has proven a very useful feature on Cincinnati Dividing Heads.

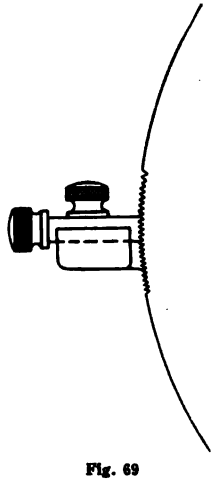

Fig. 69

A section of the 8½″ diameter index plate showing the notches and lock.

HIGH NUMBER INDEX TABLE

For Simple Indexing High Numbers, Prime, Odd and Even

FOR USE WITH HIGH NUMBER INDEXING ATTACHMENT.

INDEXES ALL NUMBERS UP TO AND INCLUDING 200; ALL EVEN NUMBERS AND THOSE DIVISIBLE BY 5 UP TO AND INCLUDING 400, EXCEPT 225-275-325-375.

This attachment consists of a set of 3 index plates which are drilled on six sides, A, B, C, D, E and F. (See note, page 75.)

Example to index 35 divisions: The preferred side is F, since this requires the least number of holes. But should either D, A or E be in place, it can be used, thus avoiding the bother of changing plates.

No. of Divisions	Side	Circle	Turns	Holes	No. of Divisions	Side	Circle	Turns	Holes	No. of Divisions	Side	Circle	Turns	Holes
2	ANY	ANY	20	.....	15	A	30	2	20	26	F	26	1	14
3	A	30	13	10	15	B	36	2	24	26	A	91	1	49
3	B	36	13	12	15	E	42	2	28	26	B	169	1	91
3	E	42	13	14	15	C	93	2	62	27	B	81	1	39
3	C	93	13	31	15	F	159	2	106	27	A	189	1	91
3	F	159	13	53	16	E	26	2	13	28	F	28	1	12
4	ANY	ANY	10	.....	16	F	28	2	14	28	E	42	1	18
5	ANY	ANY	8	.....	16	A	30	2	15	28	D	77	1	33
6	A	30	6	20	16	D	32	2	16	28	A	91	1	39
6	B	36	6	24	16	C	34	2	17	29	E	87	1	33
6	E	42	6	28	16	B	36	2	18	30	A	30	1	10
6	C	93	6	62	17	C	34	2	12	30	B	36	1	12
6	F	159	6	106	17	E	119	2	42	30	E	42	1	14
7	F	28	5	20	17	C	153	2	54	30	C	93	1	31
7	E	42	5	30	17	F	187	2	66	30	F	159	1	53
7	D	77	5	55	18	B	36	2	8	31	C	93	1	27
7	A	91	5	65	18	A	99	2	22	32	F	28	1	7
8	ANY	ANY	5	.....	18	C	153	2	34	32	D	32	1	8
9	B	36	4	16	19	F	38	2	4	32	B	36	1	9
9	A	99	4	44	19	E	133	2	14	32	A	48	1	12
9	C	153	4	68	19	A	171	2	18	33	A	99	1	21
10	ANY	ANY	4	.....	20	ANY	ANY	2		34	C	34	1	6
11	D	44	3	28	21	E	42	1	38	34	E	119	1	21
11	A	99	3	63	21	A	147	1	133	34	F	187	1	33
11	F	143	3	91	22	D	44	1	36	35	F	28	1	4
12	A	30	3	10	22	A	99	1	81	35	D	77	1	11
12	B	36	3	12	22	F	143	1	117	35	A	91	1	13
12	E	42	3	14	23	C	46	1	34	35	E	119	1	17
12	C	93	3	31	23	A	69	1	51	36	B	36	1	4
12	F	159	3	53	23	E	161	1	119	36	A	99	1	11
13	E	26	3	2	24	A	30	1	20	36	C	153	1	17
13	A	91	3	7	24	B	36	1	24	37	B	111	1	9
13	F	143	3	11	24	E	42	1	28	38	F	38	1	2
13	B	169	3	13	24	C	93	1	62	38	E	133	1	7
14	F	28	2	24	24	F	159	1	106	38	A	171	1	9
14	E	42	2	36	25	A	30	1	18	39	A	117	1	3
14	D	77	2	66	25	E	175	1	105	40	ANY	ANY	1	....
14	A	91	2	78										

Index Table for High Numbers—Continued

No. of Divisions	Side	Circle	Holes	No. of Divisions	Side	Circle	Holes	No. of Divisions	Side	Circle	Holes
41	C	123	120	66	A	99	60	92	A	69	30
42	E	42	40	67	B	67	40	92	E	161	70
42	A	147	140	68	C	34	20	93	C	93	40
43	A	129	120	68	E	119	70	94	B	141	60
44	D	44	40	68	F	187	110	95	F	38	16
44	A	99	90	69	A	69	40	95	E	133	56
44	F	143	130	70	F	28	16	95	A	171	72
45	B	36	32	70	D	42	24	96	B	36	15
45	A	99	88	70	A	91	52	96	A	48	20
45	C	153	136	70	E	119	68	97	B	97	40
46	C	46	40	71	F	71	40	98	A	147	60
46	A	69	60	72	B	36	20	99	A	99	40
46	E	161	140	72	A	117	65	100	A	30	12
47	B	141	120	72	C	153	85	100	E	175	70
48	A	30	25	73	E	73	40	101	F	101	40
48	B	36	30	74	B	111	60	102	C	153	60
49	A	147	120	75	A	30	16	103	E	103	40
50	A	30	24	76	F	38	20	104	E	26	10
50	E	175	140	76	E	133	70	104	A	91	35
51	C	153	120	76	A	171	90	104	F	143	55
52	E	26	20	77	D	77	40	104	B	169	65
52	A	91	70	78	A	117	60	105	E	42	16
52	F	143	110	79	C	79	40	105	A	147	56
52	B	169	130	80	E	26	13	106	F	159	60
53	F	159	120	80	F	28	14	107	D	107	40
54	B	81	60	80	A	30	15	108	B	81	30
54	A	189	140	80	D	32	16	108	A	189	70
55	D	44	32	80	C	34	17	109	C	109	40
55	F	143	104	80	B	36	18	110	D	44	16
56	F	28	20	80	E	42	21	110	A	99	36
56	E	42	30	81	B	81	40	110	F	143	52
56	D	77	55	82	C	123	60	111	B	111	40
56	A	91	65	83	F	83	40	112	F	28	10
57	A	171	120	84	E	42	20	112	E	42	15
58	E	87	60	84	A	147	70	113	F	113	40
59	A	177	120	85	C	34	16	114	A	171	60
60	A	30	20	85	E	119	56	115	C	46	16
60	B	36	24	85	F	187	88	115	A	69	24
60	E	42	28	86	A	129	60	115	E	161	56
60	F	159	106	87	E	87	40	116	E	87	30
61	B	183	120	88	D	44	20	117	A	117	40
62	C	93	60	88	A	99	45	118	A	177	60
63	A	189	120	88	F	143	65	119	E	119	40
64	D	32	20	89	D	89	40	120	A	30	10
64	A	48	30	90	B	36	16	120	B	36	12
65	E	26	16	90	A	99	44	120	E	42	14
65	A	91	56	90	C	153	68	120	C	93	31
65	F	143	88	91	A	91	40	120	F	159	53
65	B	169	104	92	C	46	20	121	D	121	40

Index Table for High Numbers—Continued

No. of Divisions	Side	Circle	Holes	No. of Divisions	Side	Circle	Holes	No. of Divisions	Side	Circle	Holes
122	B	183	60	**160**	F	28	7	**197**	C	197	40
123	C	123	40	**160**	D	32	8	**198**	A	99	20
124	C	93	30	**160**	B	36	9	**199**	B	199	40
125	E	175	56	**160**	A	48	12	**200**	A	30	6
126	A	189	60	**161**	E	161	40	**200**	E	175	35
127	B	127	40	**162**	B	81	20	**202**	F	101	20
128	D	32	10	**163**	D	163	40	**204**	C	153	30
128	A	48	15	**164**	C	123	30	**205**	C	123	24
129	A	129	40	**165**	A	99	24	**206**	E	103	20
130	E	26	8	**166**	F	83	20	**208**	E	26	5
130	A	91	28	**167**	C	167	40	**210**	E	42	8
130	F	143	44	**168**	E	42	10	**210**	A	147	28
130	B	169	52	**168**	A	147	35	**212**	F	159	30
131	F	131	40	**169**	B	169	40	**214**	D	107	20
132	A	99	30	**170**	C	34	8	**215**	A	129	24
133	E	133	40	**170**	E	119	28	**216**	B	81	15
134	B	67	20	**170**	F	187	44	**216**	A	189	35
135	B	81	24	**171**	A	171	40	**218**	C	109	20
135	A	189	56	**172**	A	129	30	**220**	D	44	8
136	C	34	10	**173**	F	173	40	**220**	A	99	18
136	E	119	35	**174**	E	87	20	**220**	F	143	26
137	D	137	40	**175**	E	175	40	**222**	B	111	20
138	A	69	20	**176**	D	44	10	**224**	F	28	5
139	C	139	40	**177**	A	177	40	**226**	F	113	20
140	F	28	8	**178**	D	89	20	**228**	A	171	30
140	E	42	12	**179**	D	179	40	**230**	C	46	8
140	D	77	22	**180**	B	36	8	**230**	A	69	12
140	A	91	26	**180**	A	99	22	**230**	E	161	28
141	B	141	40	**180**	C	153	34	**232**	E	87	15
142	F	71	20	**181**	C	181	40	**234**	A	117	20
143	F	143	40	**182**	A	91	20	**235**	B	141	24
144	B	36	10	**183**	B	183	40	**236**	A	177	30
145	E	87	24	**184**	C	46	10	**238**	E	119	20
146	E	73	20	**184**	A	69	15	**240**	A	30	5
147	A	147	40	**184**	E	161	35	**240**	B	36	6
148	B	111	30	**185**	B	111	24	**240**	E	42	7
149	E	149	40	**186**	C	93	20	**240**	A	48	8
150	A	30	8	**187**	F	187	40	**242**	D	121	20
151	D	151	40	**188**	B	141	30	**244**	B	183	30
152	F	38	10	**189**	A	189	40	**245**	A	147	24
152	E	133	35	**190**	F	38	8	**246**	C	123	20
152	A	171	45	**190**	E	133	28	**248**	C	93	15
153	C	153	40	**190**	A	171	36	**250**	E	175	28
154	D	77	20	**191**	E	191	40	**252**	A	189	30
155	C	93	24	**192**	A	48	10	**254**	B	127	20
156	A	117	30	**193**	D	193	40	**255**	C	153	24
157	B	157	40	**194**	B	97	20	**256**	D	32	5
158	C	79	20	**195**	A	117	24	**258**	A	129	20
159	F	159	40	**196**	A	147	30	**260**	E	26	4

Index Table for High Numbers—Continued

No. of Divisions	Side	Circle	Holes	No. of Divisions	Side	Circle	Holes	No. of Divisions	Side	Circle	Holes
260	A	91	14	305	B	183	24	355	F	71	8
260	F	143	22	306	C	153	20	356	D	89	10
260	B	169	26	308	D	77	10	358	D	179	20
262	F	131	20	310	C	93	12	360	B	36	4
264	A	99	15	312	A	117	15	360	A	99	11
265	F	159	24	314	B	157	20	360	C	153	17
266	E	133	20	315	A	189	24	362	C	181	20
268	B	67	10	316	C	79	10	364	A	91	10
270	B	81	12	318	F	159	20	365	E	73	8
270	A	189	28	320	D	32	4	366	B	183	20
272	C	34	5	320	A	48	6	368	C	46	5
274	D	137	20	322	E	161	20	370	B	111	12
276	A	69	10	324	B	81	10	372	C	93	10
278	C	139	20	326	D	163	20	374	F	187	20
280	F	28	4	328	C	123	15	376	B	141	15
280	E	42	6	330	A	99	12	378	A	189	20
280	D	77	11	332	F	83	10	380	F	38	4
280	A	91	13	334	C	167	20	380	E	133	14
282	B	141	20	335	B	67	8	380	A	171	18
284	F	71	10	336	E	42	5	382	E	191	20
285	A	171	24	338	B	169	20	384	A	48	5
286	F	143	20	340	C	34	4	385	D	77	8
288	B	36	5	340	E	119	14	386	D	193	20
290	E	87	12	340	F	187	22	388	B	97	10
292	E	73	10	342	A	171	20	390	A	117	12
294	A	147	20	344	A	129	15	392	A	147	15
295	A	177	24	345	A	69	8	394	C	197	20
296	B	111	15	346	F	173	20	395	C	79	8
298	E	149	20	348	E	87	10	396	A	99	10
300	A	30	4	350	E	175	20	398	B	199	20
302	D	151	20	352	D	44	5	400	A	30	3
304	F	38	5	354	A	177	20				

NOTE.—These three plates have holes as follows:

PLATE { A—30, 48, 69, 91, 99, 117, 129, 147, 171, 177, 189
B—36, 67, 81, 97, 111, 127, 141, 157, 169, 183, 199

PLATE { C—34, 46, 79, 93, 109, 123, 139, 153, 167, 181, 197
D—32, 44, 77, 89, 107, 121, 137, 151, 163, 179, 193

PLATE { E—26, 42, 73, 87, 103, 119, 133, 149, 161, 175, 191
F—28, 38, 71, 83, 101, 113, 131, 143, 159, 173, 187

STANDARD INDEX TABLE

For the Standard Index Plate Used with Dividing Head

INDEXES ALL NUMBERS UP TO AND INCLUDING 60; ALL EVEN NUMBERS AND THOSE DIVISIBLE BY 5 UP TO 120, AND ALL DIVISIONS OBTAINABLE UP TO 400.

This Plate is drilled on both sides and has holes as follows:

FIRST SIDE—24-25-28-30-34-37-38-39-41-42-43.
SECOND SIDE—46-47-49-51-53-54-57-58-59-62-66.

No. of Divisions	Circle	Turns	Holes	No. of Divisions	Circle	Holes	No. of Divisions	Circle	Holes	No. of Divisions	Circle	Holes
2	ANY	20	..	44	66	60	104	39	15	205	41	8
3	24	13	8	45	54	48	105	42	16	210	42	8
4	ANY	10	..	46	46	40	106	53	20	212	53	10
5	ANY	8	..	47	47	40	108	54	20	215	43	8
6	24	6	16	48	24	20	110	66	24	216	54	10
7	28	5	20	49	49	40	112	28	10	220	66	12
8	ANY	5	..	50	25	20	114	57	20	224	28	5
9	54	4	24	51	51	40	115	46	16	228	57	10
10	ANY	4	..	52	39	30	116	56	20	230	46	8
11	66	3	42	53	53	40	118	59	20	232	58	10
12	24	3	8	54	54	40	120	66	22	235	47	8
13	39	3	3	55	66	48	124	62	20	236	59	10
14	49	2	42	56	28	20	125	25	8	240	66	11
15	24	2	16	57	57	40	130	39	12	245	49	8
16	24	2	12	58	58	40	132	66	20	248	62	10
17	34	2	12	59	59	40	135	54	16	250	25	4
18	54	2	12	60	42	28	136	34	10	255	51	8
19	38	2	4	62	62	40	140	28	8	260	39	6
20	ANY	2	..	64	24	15	144	54	15	264	66	10
21	42	1	38	65	39	24	145	58	16	270	54	8
22	66	1	54	66	66	40	148	37	10	272	34	5
23	46	1	34	68	34	20	150	30	8	280	28	4
24	24	1	16	70	28	16	152	38	10	290	58	8
25	25	1	15	72	54	30	155	62	16	296	37	5
26	39	1	21	74	37	20	156	39	10	300	30	4
27	54	1	26	75	30	16	160	28	7	304	38	5
28	42	1	18	76	38	20	164	41	10	310	62	8
29	58	1	22	78	39	20	165	66	16	312	39	5
30	24	1	8	80	34	17	168	42	10	320	24	3
31	62	1	18	82	41	20	170	34	8	328	41	5
32	28	1	7	84	42	20	172	43	10	330	66	8
33	66	1	14	85	34	16	176	66	15	336	42	5
34	34	1	6	86	43	20	180	54	12	340	34	4
35	28	1	4	88	66	30	184	46	10	344	43	5
36	54	1	6	90	54	24	185	37	8	360	54	6
37	37	1	3	92	46	20	188	47	10	368	46	5
38	38	1	2	94	47	20	190	38	8	370	37	4
39	39	1	1	95	38	16	192	24	5	376	47	5
40	ANY	1	..	96	24	10	195	39	8	380	38	4
41	41	..	40	98	49	20	196	49	10	390	39	4
42	42	..	40	100	25	10	200	30	6	392	49	5
43	43	.	40	102	51	20	204	51	10	400	30	3

CHAPTER IV

SETTING UP THE MACHINE

Placing Cutters on the Arbor. When setting up the machine preparatory to milling a piece of work, care should be taken to have the cutters as close to the end of the spindle as the work will permit. Milling Machine arbors in general use are as a rule very much smaller in diameter than they should be, and their weakness is simply emphasized by placing cutters at or near the middle of a long, unsupported arbor. Cutters on hand may have small holes, making small diameter arbors necessary, but whenever new cutters are ordered, careful consideration should be given to having them made large enough to permit of using arbors of large diameter, since it is only with properly designed cutters and arbors of sufficient size that the best results can be obtained from modern High-Power Milling Machines. (See paragraph on chattering, page 87.)

Cutters should always be keyed to the arbors. The friction due to tightening up the arbor nut can not be expected to hold them. Particular attention should be paid to the proper cleansing of the hole in the spindle and the taper shank of the arbor. Unless this point is carefully watched, a true running arbor can not result, accurate work can not be secured, both the hole in the spindle and the bush in the arbor support will be spoiled. The body of the arbor, the arbor collars, and the shank should be thoroughly cleaned before the cutters and collars are placed on the arbor. Any foreign matter between these members will bend the arbor when the nut is tightened.

Arbor Supports. We supply with all our machines two different styles of arbor supports. For the small arbors which have a bearing on the outside of the arbor nut, there is a suitable adjustable bronze bush in one of the supports. The larger arbors all have one or two spacing collars that are larger than the rest, and these collars fit the bushing in the arbor bearing bracket and serve to give the arbor an additional support. This bearing collar should be as close to the cutters as practical so that the support may be close to the cutters and thus properly support the arbor. The

braces for tying the arbor support to the knee of the machine should always be used if the work will permit.

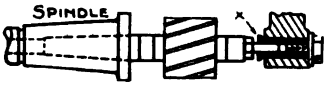

Fig. 70

Fig. 70. All short arbors are provided with a pilot bearing at the end. This fits a split bronze bushing, X, in the arbor support. Adjust this bushing to a close bearing.

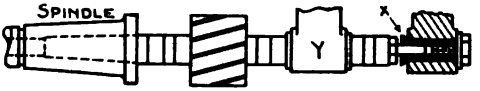

Fig. 71

Fig. 71. Some medium length arbors have in addition to an end pilot bearing, X, as above, an arbor bearing collar to fit the intermediate support Y. This support should be placed as close to the cutter as practical, the cutter itself being located as close to the shoulder of the arbor as conditions will permit.

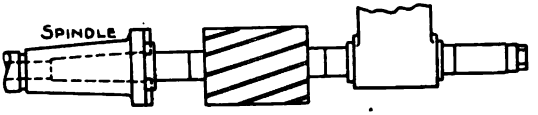

Fig. 72

Fig. 72. Another style of medium length arbor does not have the pilot bearing for bronze bush at end, but is furnished with a bearing collar which permits of placing the support anywhere close to the cutter.

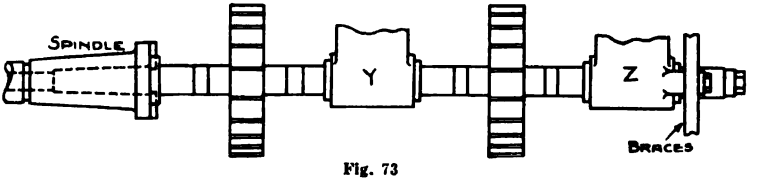

Fig. 73

Fig. 73. All our long arbors have two bearing collars. Whenever possible, one of these, Y, should be placed between cutters that are spaced some distance apart on the arbor and the other, Z, to which the braces are fastened, should be as close to the outside of the gang as conditions will permit.

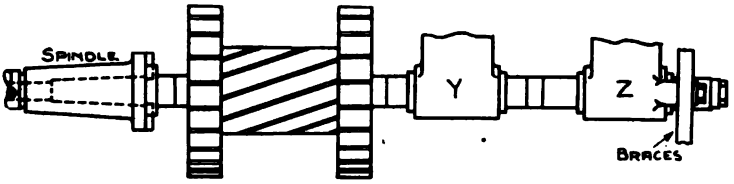

Fig. 74

Fig. 74. Another way of supporting a long arbor. In this case the width of the table does not permit of bringing the support Z, to which the braces are fastened, close to the cutters. The intermediate support Y is therefore placed close to the gang and between it and the outer support Z.

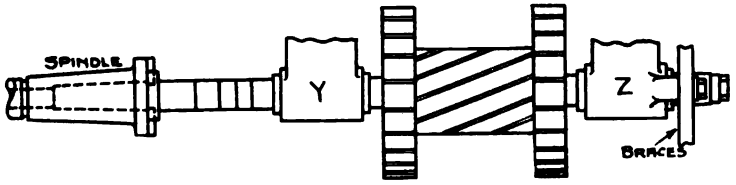

Fig. 75

Fig. 75. Sometimes the nature of the work requires the cutters to be near the outer end of the arbor. Then the intermediate support Y should be placed inside of the gang, that is, between the gang and the spindle.

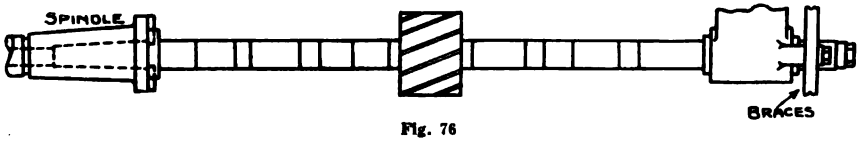

Fig. 76

Fig. 76. **The Wrong Way.** In all of the above cases the cutters have been placed as near the end of the spindle as conditions permit. When this was not possible the supports have been placed close to each side of the cutters. Compare these conditions with this sketch, which shows a cutter in the middle of a long, unsupported arbor. This sort of set-up should never be tolerated. It can not possibly produce satisfactory results.

The Drive for Arbors and Cutters. All of our High Power Machines as well as our larger Cone Driven Machines, Automatic

Fig. 77

Machines and Manufacturing Machines have flanged spindles, as shown in Fig. 77. These flanges are fitted with hardened keys.

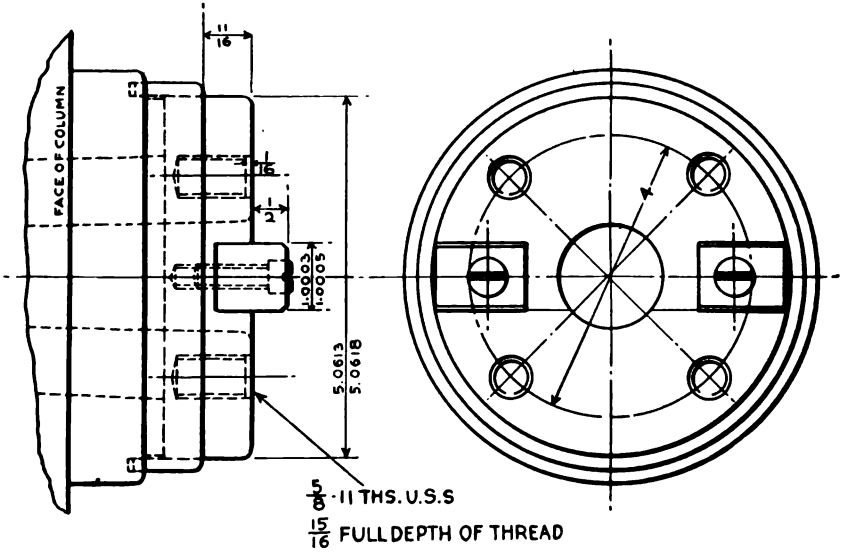

Fig. 78

The cutter arbors are made of solid forgings providing corresponding flanges for driving. This provides a powerful, durable drive that is not easily injured even when doing the heaviest cutting. Face mills are driven in the same way. They are slightly counterbored to fit over the flanges, thus centering them, and they are recessed to receive the driving keys. They are held in place by four screws.

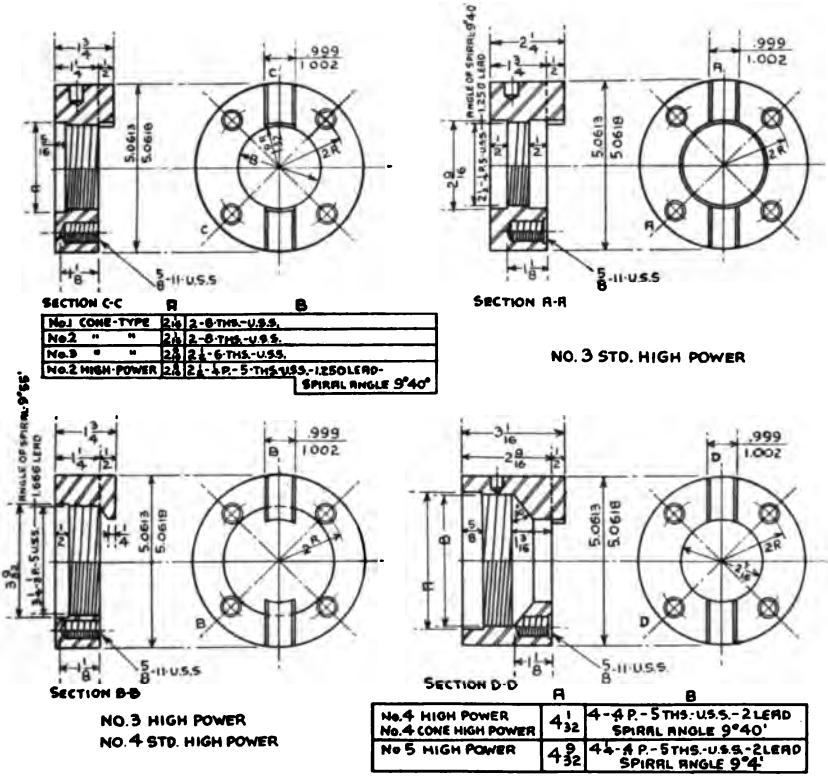

	A	B
No.1 CONE-TYPE	2 1/8	2-8 THS.-U.S.S.
No.2 " "	2 1/8	2-8 THS.-U.S.S.
No.3 " "	2 1/4	2 1/4-6 THS.-U.S.S.
No.2 HIGH-POWER	2 1/4	2 1/4-4 P.-5 THS.-U.S.S.-1.25 LEAD-SPIRAL ANGLE 9°40'

	A	B
No.4 HIGH POWER No.4 CONE HIGH POWER	4 1/32	4-4 P.-5 THS.-U.S.S.-2 LEAD SPIRAL ANGLE 9°40'
No 5 HIGH POWER	4 9/32	4 1/4-4 P.-5 THS.-U.S.S.-2 LEAD SPIRAL ANGLE 9°4'

Fig. 79

This is simpler than the use of threaded spindle ends; it makes a more powerful drive, and mills are easily removed after doing heavy cutting.

The same face mill will fit all sizes and styles of Cincinnati Millers which have flanged spindle ends. This complete interchangeability reduces the number of face mills it is necessary to keep on hand. Complete working dimensions for use when making face

mills to fit standard flanged spindle ends are given in the drawing Fig. 78.

Spindle Flanges for Threaded Spindles. It will be found very simple to put flanges on the older machines having threaded spindle ends, and thus gain the full advantage of complete interchangeability of face mills between these and the later machines. On some sizes such a flange will also adapt the older machine for using the new flanged arbors.

The sketches, Fig. 79, show flanges suitable for Cincinnati Millers with threaded spindles as made in recent years, and give sufficient dimensions to enable anyone to make similar flanges to suit the spindle ends of any other Cincinnati machines.

Cutter Arbors. All our arbors 1″ diameter and larger have standard keyways as listed in the table. These are also the standard keyways used in cutters.

Standard Keyways for Cutters and Arbors

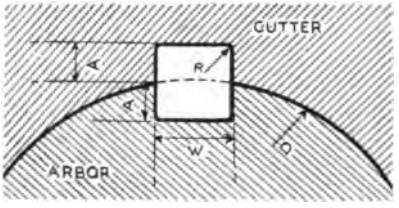

Fig. 80

Diameter of Hole (D) in Cutter, Inches	Width (W), Inches	Depth (A), Inches	Radius (R), Inches
$\frac{3}{8}$ to $\frac{9}{16}$	$\frac{3}{32}$	$\frac{3}{64}$	.020
$\frac{5}{8}$ to $\frac{7}{8}$	$\frac{1}{8}$	$\frac{1}{16}$	.030
$\frac{13}{16}$ to $1\frac{1}{8}$	$\frac{5}{32}$	$\frac{5}{64}$	.035
$1\frac{3}{16}$ to $1\frac{3}{8}$	$\frac{3}{16}$	$\frac{3}{32}$	.040
$1\frac{7}{16}$ to $1\frac{3}{4}$	$\frac{1}{4}$	$\frac{1}{8}$	.050
$1\frac{13}{16}$ to 2	$\frac{5}{16}$	$\frac{5}{32}$	.060
$2\frac{1}{16}$ to 2	$\frac{3}{8}$	$\frac{3}{16}$	.060
$2\frac{9}{16}$ to 3	$\frac{7}{16}$	$\frac{3}{16}$	.060

Cutters should be held on the arbor by keys that are a good **side** fit in the keyways in both the cutter and the arbor. The height of the key should be a little less than twice A, so as to have **top clearance.** A key that fits top and bottom like a wedge and not on the sides is bad because it will roll and ruin the arbor, and probably split the cutter in two.

When heavy cutting is done, there is always the danger that the side pressure will cause the key even when properly fitted, to crush in the side of the keyway in the arbor. It is best to make the key longer than the cutter. This is especially true of narrow cutters such as saws. By using a long key the pressure is distributed over a greater area, reducing the tendency to crush the keyway. The better method of driving large narrow saws is through a flange fitted with pins which will drive through holes drilled in the saws.

For especially heavy service, the special key and keyway, Fig. 81, was designed, the idea being to substitute for the shearing action of the ordinary key, a wedging action that would have no tendency to distort either key or arbor. The arbor is first flattened and then a standard size keyway is milled into it.

The keyway in the cutter is an arc of a circle and the key is made out of a piece of round stock milled in on both sides and then sawed apart lengthwise, one piece of stock forming two keys.

If, for instance, the driving pressure is from right to left, the key will be forced over to the right and the flat portion of the key pressed down on the flat on the left of the arbor. This pressure being almost directly downward, there is practically no side pressure, and therefore no distortion of the keyway in the arbor can result.

This style of key has proven very satisfactory. Cutters so mounted can be readily removed after the heaviest milling.

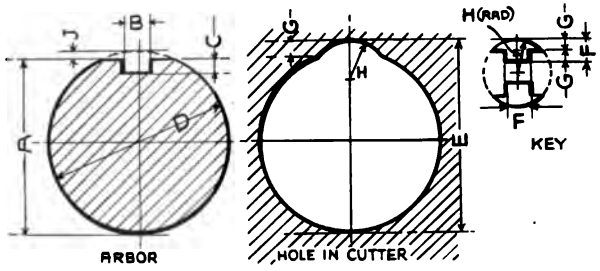

Fig. 81

A	B	C	D	E	F	G	H	J
.9737	5/32	5/64	1	1.0518	5/32	5/64	13/64	.0263
1.0378	5/32	5/64	1 1/16	1.1159	5/32	5/64	13/64	.0247
1.2187	3/16	3/32	1 1/4	1.3125	3/16	3/32	1/4	.0312
1.4543	1/4	1/8	1 1/2	1.5793	1/4	1/8	21/64	.0457
1.7111	1/4	1/8	1 3/4	1.8361	1/4	1/8	21/64	.0389
1.9473	5/16	5/32	2	2.1036	5/16	5/32	13/32	.0527

Standard Cutter Arbors Carried in Stock

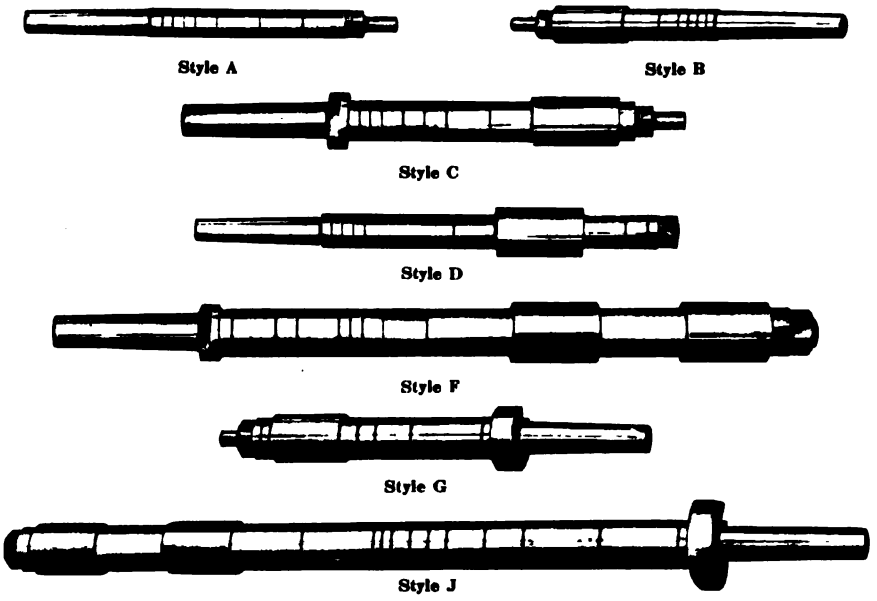

Fig. 82. Milling Cutter Arbors

We carry in stock arbors as listed. We no longer put tangs on arbors, because tangs are not strong enough to do the heavy work that is now being required of milling machines. The small end of the arbor shank is tapped $\frac{5}{8}$", 11 threads for drawing-in bolt, and a $\frac{5}{8}$" bolt long enough to reach through the spindle of the machine and draw the arbor firmly into the taper, is furnished as part of the equipment of every machine. All arbors 1" diameter and over are splined for standard keys.

MACHINES ON WHICH THEY FIT	No.	Style	No. of Taper	Diameter	Length from Shoulder to Nut	Diameter Bearing Collar	Flanged	Code Word
18" and 18" B. G....	08	A	9	$\frac{7}{8}$	5	.....	.....	BRAIL
	09	A	9	1	6	.....	.....	BREAM
18" Plain manufacturing.....	‡141	J	10	1	$14\frac{1}{2}$	2	Yes	BADGE
	‡143	J	10	$1\frac{1}{4}$	$14\frac{1}{2}$	2	Yes	BEXI
1 and 2 Plain and Universal Cone Machines; also No. 2 High-Power when spindle end is threaded. 18" Plain Manufactur'g Machines also use Arbors Nos. 41 and 43	7	A	10	1	6	.....	.....	BROTH
	9	A	10	$1\frac{1}{4}$	6	.....	.....	BUGLE
	*10	A	10	$\frac{7}{8}$	8	.....	.....	BUNG
	11	A	10	1	8	.....	.....	BUOY
	13	A	10	$1\frac{1}{4}$	8	.....	.....	BUSBY
	41	D	10	1	$14\frac{1}{2}$	2	.....	CHIME
	43	D	10	$1\frac{1}{4}$	$14\frac{1}{2}$	2	.....	CHINK
	44	D	10	$1\frac{1}{4}$	27	2	.....	CHIX
	45	D	10	$1\frac{1}{2}$	27	$2\frac{3}{8}$	.....	CHOIR

Standard Cutter Arbors—Continued

MACHINES ON WHICH THEY FIT	No.	Style	No. of Taper	Diameter	Length from Shoulder to Nut	Diameter of Bearing Collar	Flanged	Code Word
No. 3 Plain and Universal Cone Type, with threaded spindle end. 18", 24" Auto. Machines	16	A	11	1	10	.....	.....	CABAL
	18	B	11	1¼	10	2⅜	.....	CALP
	53	D	11	1	18½	2⅜	.....	CLANG
	55	D	11	1¼	18½	2⅜	.....	CLIFF
	56	D	11	1½	18½	2⅜	.....	CLOUD
No. 3 Pl. and Un. H. P. and Std. with Threaded Spindle End	59	F	11	1¼	29	2⅜	.....	CODEX
	57	F	11	1½	29	2⅜	.....	COACH
Nos. 2 and 3 High-Power Plain and Universal, No. 3 Plain and Universal Cone and Nos. 3 and 4 Plain and Universal Standard with flanged spindle end.† 18", 24" Automatic with flanged spindle end	16	A	11	1	10	.....	.....	CABAL
	81†	G	11	1¼	†12	2⅜	Yes	CZECH
	83†	J	11	1¼	†18½	2⅜	Yes	CZAR
	84†	J	11	1½	†18½	2⅜	Yes	BRYCE
	85	J	11	1¼	29	2⅜	Yes	BRUS
	86	J	11	1½	29	2⅜	Yes	BRIN
Nos. 4 and 5 Plain and Universal Cone and High-Power Millers when spindle end is threaded	23	C	12	1	10	.....	.....	CANAL
	25	C	12	1¼	12	2⅝	.....	CAPER
	26	C	12	1½	14	2⅝	.....	CAUL
	66	F	12	1¼	26	2⅝	.....	CALON
	67	F	12	1½	26	2⅝	.....	CALZA
No. 4 Plain and Universal High-Power, also No. 4 Plain and Universal Cone with flanged spindle end	90	A	12	1	10	.....	.....	BLIF
	91	G	12	1¼	12	2⅝	Yes	BLUP
	92	G	12	1½	14	2⅝	Yes	BLYO
	93	J	12	1¼	26	2⅝	Yes	BYRT
	94	J	12	1½	26	2⅝	Yes	BIXY
	95	J	12	1¾	26	2⅝	Yes	BIZA
	96	J	12	2	26	2⅝	Yes	BIUD
	101	J	12	1½	36	2⅝	Yes	BEWE
	102	J	12	1¾	36	2⅝	Yes	BUXE
	103	J	12	2	36	2⅝	Yes	BUZZ
Nos. 4 and 5 Plain and Universal with flanged spindle end and No. 14 taper hole	104	J	14	1¼	27	2⅝	Yes	FARBE
	105	J	14	1½	27	2⅝	Yes	FRUG
	107	J	14	2	27	2⅝	Yes	FRAES
	108	J	14	1½	38	2⅝	Yes	FREND
	110	J	14	2	38	2⅝	Yes	FUDI
	111	J	14	2½	38	3¼	Yes	FLANS
Nos. 1M and 2M Plain and Universal Constant Speed Drive	112	A	14	1	8	2	.....	ARMIL
	118	D	14	1¼	20	2	.....	ARTRE

*When it is necessary to use a ½" arbor on the larger machines we recommend the No. 10 arbor in connection with standard collets as follows:

Nos. 2 and 3 High-Power, No. 3 Standard and Cone Type Machines with flanged or threaded spindle ends, use 459 collet.

Nos. 4 and 5 Machines with flanged or threaded spindle ends, use 461 collet.

Nos. 4 and 5 Machines, with No. 14 taper hole, use 463 collet.

‡Furnished with only one bearing collar.

†These arbors are suitable for plain automatics.

Arbor Equipments for Millers are as Follows:

Machine Size	Arbor Included	Arbor Sent on Approval
Cone-Type Machines		
18″ Pl.	.....	No. 09—1″ x 6″
18″ B. G.	.....	No. 09—1″ x 6″
18″ Pl. Mfg.	.....	No. 141—1″ x 14½″ No. 143—1¼″ x 14½″
1 Pl.	.....	No. 11—1″ x 8″ No. 41—1″ x 14½″
2 Pl.	.....	No. 11—1″ x 8″ No. 43—1¼″ x 14½″
3 Pl.	.....	No. 81—1¼″ x 12″ No. 86—1½″ x 29″
4 Pl.	.....	No. 92—1½″ x 14″ No. 103—2″ x 36″
1 Un.	No. 11—1″ x 8″	.....
2 Un.	No. 11—1″ x 8″	No. 43—1¼″ x 14½″
3 Un.	No. 16—1″ x 10″	No. 86—1½″ x 29″
4 Un.	No. 91—1¼″ x 12″	No. 103—2″ x 36″
M Type Constant Speed Drive Machines		
With Flanged Spindle Ends		
1M Pl. 2M Pl. 1M Un. 2M Un.	.....	No. 112—1″ x 8″ No. 118—1¼″ x 20″
High-Power Machines		
Constant Speed Drive with Flanged Spindle Ends		
2 Pl.	.....	No. 16—1″ x 10″ No. 86—1½″ x 29″
3 Pl. Std.	.....	No. 81—1¼″ x 12″ No. 86—1½″ x 29″
3 Pl.	.....	No. 81—1¼″ x 12″ No. 86—1½″ x 29″
4 Pl. Std.	.....	No. 81—1¼″ x 12″ No. 86—1½″ x 29″
4 Pl.	.....	No. 105—1½″ x 27″ No. 110—2″ x 38″
5 Pl.	.....	No. 105—1½″ x 27″ No. 110—2″ x 38″
2 Un.	No. 16—1″ x 10″	No. 86—1½″ x 29″
3 Un. Std.	No. 16—1″ x 10″	No. 86—1½″ x 29″
3 Un.	No. 16—1″ x 10″	No. 86—1½″ x 29″
4 Un. Std.	No. 16—1″ x 10″	No. 86—1½″ x 29″
4 Un.	No. 105—1½″ x 27″	No. 110—2″ x 38″
5 Un.	No. 105—1½″ x 27″	No. 110—2″ x 38″

Chattering

Probably the greatest annoyance to which users of Milling Machines are subjected, is the peculiar action called "chattering." This is a condition of vibration that sometimes is so serious as to affect the entire machine, and frequently gives the impression that it is caused by the driving gearing. This is hardly ever the case. Chattering always starts at the cutter, and whatever vibration may result from it in other members is due entirely to this intermittent motion of the cutter as it passes through the work and this motion carried through the spindle and gears causes a corresponding and exaggerated vibration in those members. We can not emphasize too strongly that **chattering always starts at the cutter,** although the fault may not always lie in the cutter itself.

The action of the cutter at work is fully described in the chapter on An Analysis of the Process of Milling. Now, if the cutter can spring away from the work, or if the cutter is not properly sharpened so that it alternately digs in and then slides over the work again, it throws intermittent torsional strains on the arbor and these are carried through to the gears.

When investigating the trouble it is well to make sure first that the machine is in proper adjustment, especially the spindle; that the arbor is properly fitted into the spindle and securely held there; that the cutters and arbor supports are all as close to the end of the spindle as possible so as to keep the arbor from bending and springing away from the work; that the braces are properly attached and that the table, saddle and knee gibs are properly adjusted. If all these things are as they should be, the cause of the chatter lies either in the cutter, the method of mounting the cutter, the work itself, the method of holding the work, or a combination of some or all of these.

Mounting the Work. The work should be mounted so as to bring the cutter as near the end of the spindle as possible and then the outer arbor support should be brought as close to the cutter as the work will allow. You can not get good results from a cutter held in the middle of a 1″ arbor, 16″ or 18″ long, supported at its outer end only. The arbor should be as large as possible. The work must be securely held either in the vise or in a properly designed fixture, and the fixture itself must be strong enough to hold the work.

We have known of serious cases of chattering that were caused by the operator having failed to carefully clean the fixture before inserting a new piece with the result that the piece rocked in the fixture. In another case, pieces made on an automatic machine were held in an excellent fixture made to fit the pieces and hold them securely, but serious chattering resulted from the fact that when adjusting the automatic machine which made the pieces, after the tools had been sharpened, the pieces were not made to the exact size as before, and therefore did not fit the jig. Although they were held down tight enough for the milling operation, they were not properly supported and this caused all the trouble. Yet our customer did not suspect this because he felt sure that the pieces were being turned to uniform size and shape. Sometimes the work itself is so frail that it springs under the cut and this induces chattering.

When the arbor is of proper size and the cutters are properly mounted; the work of sufficient strength to stand the cut and securely held in proper fixtures, serious chattering may still result because of a faulty cutter. It is certain that if each tooth of a cutter has an opportunity to take an even chip of the same size, there will be no chattering provided that each tooth has an opportunity to take a chip of adequate thickness. Cutters with teeth close together are almost sure to chatter because the chip per tooth becomes so small that it is practically impossible for each tooth to take a chip. This condition is exaggerated if a slow feed rate is used. For instance, if we have an old-fashioned cutter with 16 teeth, feeding .008″ per revolution, each one of these 16 teeth has a chance to take a maximum chip only .0005″ thick. It is not practical to grind a cutter that will run as accurately as this after it has been mounted on the arbor. Some of the teeth will therefore slide over the work. Even with all the other conditions as they should be, such a cutter is likely to cause those minute vibrations which produce the high pitched singing effect.

If the feed in this case is increased to .030 or .040″ per revolution, the difficulty is quite sure to disappear. Again, an entirely new cutter of correct design may cause chattering because the cuttermaker, not knowing on what class of work the cutters will be used, usually grinds them with about 7° clearance. This is about 50% more than it should be for cast iron and about twice what it should be for steel. Such a cutter having too much clearance will dig into the work and then spring back again at close intervals, causing the worst kind of chattering conditions.

Every new cutter should therefore first be properly sharpened for the work to be done. It sometimes happens that a cutter chatters when first put into the machine and after some use the chattering disappears. This is because the extreme cutting edge has been worn off a sufficient amount to reduce the clearance at the edge.

One of the classes of milling that causes annoyance is milling keyways in shafts. These keyways usually are at the end of the shaft. The clamps are therefore some distance back from the end. The result is that when the cutter enters the work it lifts the shaft off the Milling Machine table, and of course, chattering results. On such work the trouble is exaggerated because usually milling cutters with side teeth are used. We recommend against this. A cutting-off tool in a lathe does not have side teeth, yet the action is the same. A plain milling cutter of proper width, with its sides very slightly hollow-ground will produce better results and the action of such a cutter will be still further improved if about two-fifths of the width of the teeth is ground off alternately so that each tooth will take a chip a little more than one-half of the width of the keyway to be cut. (See Chapter on Milling Cutters.)

Frequently some degree of chattering is induced by the cutter not running true and it is not unusual for the user to feel that this is caused by either the hole in the spindle of the miller or the arbor not being true. This may be the case if the arbor and the hole in the spindle are not always carefully cleaned before inserting the arbor but the trouble is frequently due to the cutter teeth not having been ground true with the hole.

Remedies for Chattering—Make sure that the machine is in proper adjustment all over; make sure that the arbor is of proper size; that its shank fits the hole in the spindle; that it is clean, and that the cutters are properly mounted and the arbor properly supported. The piece of work must be securely held and properly supported so it can not spring. If the cutter is the old-fashioned kind with teeth close together, grind out every other tooth. If the clearance angle is too great, reduce it. Cutters should be of the design as described in the chapter on Milling Cutters. These cutters used with a suitable feed rate are sure to eliminate chattering if other conditions are anywhere near right. If everything else appears to be in proper order, it is advisable to change the feed rate. Increasing the feed frequently improves the relation of each tooth to the size of chip that it takes to such an extent, as to stop

the chattering action. All of the above refers to Milling Machines using cutters on an arbor.

When face mills are used, particularly on Vertical Machines, too wide a cutting face on the teeth of the mills may cause chatter. The actual work of a face mill is not done by the face edges of the teeth, but by the peripheral edges. The face edges should therefore, not be too wide, or they will have a dragging action on the work which will induce vibration. These face edges should be only about $\frac{3}{16}$" wide and the balance of the width of the blade should be ground back towards the center of the mill at an angle of about 7° (Fig. 83.)

Since chattering is really a synchronizing of the vibrations due to the different strains set up by cutting, it will sometimes be found effective to release some member, as for instance, one side of the brace, in order to break up this synchronism. Another point to be watched is the base of the fixture. It is not enough for the milling fixture to be strong enough to withstand the feed strain. It ought to be heavy enough to absorb the vibrations as discussed in the chapter on Milling Fixtures, but it is proper to say here that the provision of adequate end supports and clamps will often do away with a good deal of chatter. This is particularly true of pieces which stand high above the table, in which case the pressures or forces resulting from the cut have a great moment around the knee.

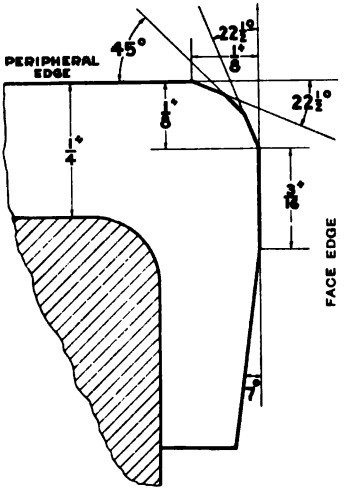

Fig. 83

Outline of a properly sharpened face mill.

CHAPTER V

AN ANALYSIS OF THE PROCESS OF MILLING

The preceding pages describe the various types of Milling Machines available for the work to be done in most machine shops and toolrooms. Bearing these machines in mind, we will proceed with an analysis of the process of milling and a discussion of the tools used.

Milling is the removal of metal by means of a tool which rotates while the work is advancing or feeding in a direction at some angle with the axis of the tool. When we mill with an ordinary spiral mill, the axis of the tool is the center line of the arbor or spindle and the feed takes place at right angles to this axis. When we use a face mill on a Vertical Machine the axis of the tool is vertical, but the table again feeds at right angles to the axis. When we cut spiral gears the axis of the tool is the same as the axis of the spindle, and the table travels at an angle with this axis, but this time it is not a right angle.

Classification of Milling Cutters

The tools used for milling are called milling cutters. Milling cutters as we know them have a number of teeth, but it is not absolutely necessary that they should have a large number; in fact, some milling cutters have only one tooth. Such cutters are called fly cutters.

Fig. 84

With the exception of fly cutters, all cutters are bodies of revolution. A body of revolution is a body with such a shape that it can be formed in a lathe; in other words, a body which has a central axis. The simplest bodies of revolution we know are cylinders,

cones and spheres, but a body of revolution may have any imaginable section.

When such a body of revolution is provided with cutting teeth, it becomes a Milling Cutter. When the teeth are on the outside of the cylinder, as in Fig. 84, it is called a Spiral Mill. When the teeth are on the base of the cylinder, as in Fig. 85, it is called a Face Mill.

When a face mill is of small diameter and of relatively great length, it is called an End Mill, Fig. 86. When the teeth are cut on a truncated cone, Fig. 87, it is called an Angular Mill; and when it is neither a cylinder nor a cone, but has an irregular outline, it is called a Form Cutter, Fig. 88.

Fig. 85

From these five fundamental forms of cutters a great variety of shapes and styles of cutters for different purposes has been developed.

The Action of a Milling Cutter

Most of the difficulties in milling arise from the peculiar shape of the chip. The action of a milling cutter at work is therefore a very important thing to keep in mind. It will readily be seen without much discussion that the chip as taken by an ordinary milling cutter, a formed cutter or an angular cutter, is approximately of the shape as shown in Fig. 89, in the shaded portion. The cutter enters at A and leaves at B. When it enters, the chip has no thickness, theoretically speaking; when it leaves, the chip has its maximum thickness.

Fig. 86

Fig. 90 gives us a somewhat better idea of the shape of such a chip, but, whereas Fig. 89 completely overlooked certain things, Fig. 90 grossly exaggerates these same points. Here a milling cutter

is shown with its center at O_1. This same cutter is also shown with its center at O_2, and it is supposed that the cutter has advanced in relation to the work from O_1 to O_2 during the time it made one revolution; in other words, that this distance O_1O_2 is the feed per revolution. (As a matter of fact, it is not the cutter which advances, but the work. However, the effect is the same and the problem is simplified by assuming that the cutter has advanced as shown.) The cutter which we have represented here is supposed to have only one tooth and this tooth is shown in the position it would be in when the center of the cutter has arrived at O_2. The line XY shows the top of the work when rough. The line VW shows the top of that part of the work which is finished. The curve YV has been swept out by the tooth of the milling cutter when its center was at O_1. It will be seen that the tooth ABC strikes the work at the point B, and that this point B is a little higher than the finished line VW. It will also be seen that at this moment the cutting edge of the tooth advances not only to the left, but also slightly downward, following the curve BR, and that it has to compress the metal of the work before it gets to the vertical position. This is not true cutting of metal because some of the parts of the metal have to be squeezed downward into the work. It is more like a punching operation. The metal has to flow away from the cutter to give the cutter a chance to enter.

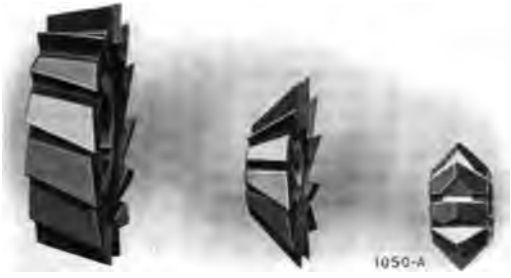

Fig. 87

Fig. 88

Fig. 91 gives a better and less exaggerated idea of what actually happens. The distance O_1O_2 is more than is ordinarily used in practice. It is true that such an amount of feed, or even more, is used per revolution, but not per tooth, and we are assuming a cut-

ter that has only one tooth. Fig. 91 shows that the tooth enters almost, but not quite, in a vertical position, and that the height of this little hill as shown at B in Fig. 90, is very small indeed, and that, therefore, there is perhaps more of a chance that the cutter will slide over the metal to be removed than that it will penetrate. This is actually what happens in practice—the tooth does not penetrate at once, but slides over the work. In doing so, the cutter and the arbor are lifted or sprung up and put an increasing amount of pressure on the work. This pressure finally becomes great enough to make the tooth of the cutter penetrate into the metal. From that moment on the chip is being removed.

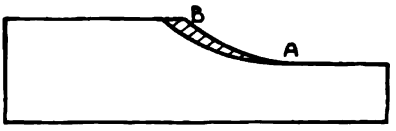

Fig. 89

There is something that makes the action described even more pronounced, and that is that a cutter is never absolutely sharp. However nicely a cutter tooth may be ground, it will be found that its edge is slightly rounded when viewed under a strong enough magnifying glass.

It is obvious that such a rounding helps the tooth to slide over the work and delays the moment when the tooth actually begins to penetrate.

All these things are not visible to the casual observer because the distances are so small and the cutter goes around so fast, but an analysis of the cutter action shows that these occurrences must actually take place.

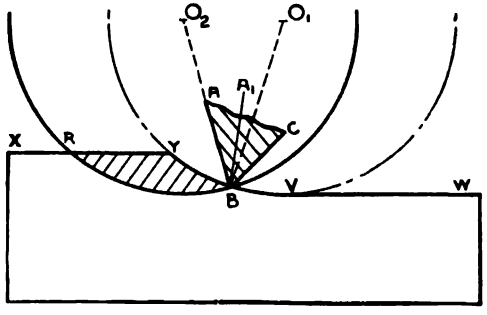

Fig. 90

Fig. 92 shows the cutter in various positions, each position being ahead of the previous one the amount of the feed per revolution. This sketch again is much exaggerated to show that the finished surface as obtained is not an absolutely smooth surface, but has ridges running across. We are all familiar with these ridges. They determine the QUALITY of the FINISH of the milled piece. It is plain that these ridges must be close together in order to give a tolerable finish. For mere roughing operations, the distance between the

ridges is of no importance, but for finished work these ridges must be close together, and the better the degree of finish required the nearer these ridges must be to each other.

Revolution Marks. These ridges are sometimes called "toothmarks." They are not toothmarks at all--they are revolution marks. If these marks were really toothmarks, then it would be possible to get the ridges very close together by simply putting more teeth in the cutter. However, as a matter of fact, the number of the teeth in the cutter does not affect the distance between these marks at all. This can be proven by putting two cutters next to each other on the same arbor. The cutters should preferably be of the same diameter and should have different numbers of teeth. They should be so placed that a pair of teeth are in line with each other. Then take a cut with both cutters at the same time over one piece of metal and you will find two important things.

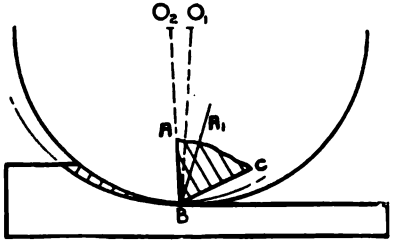

Fig. 91

In the first place, the two cuts side by side have exactly the same number of ridges per inch, showing that the number of teeth has no influence. In the second place, you will find that the ridges made by the two cutters are not in line with each other, notwithstanding the fact that we took care to line up one tooth of the one cutter with a tooth of the other.

Referring again to Fig. 92. The cutter positions are shown with a distance between them equal to the feed per revolution. We can calculate the height of the ridges if we know the diameter of the cutter, and the amount of the feed per revolution, and if we ASSUME THAT THERE IS ONLY ONE TOOTH IN THE CUTTER. The calculations show that for a $3\frac{1}{2}$" cutter, and with a feed of fifty thousandths per revolution, the height of the ridge is .00019, or practically two-tenths of a thousandth; with a feed of thirty thousandths, it would be .00007, or less than one-tenth of a thousandth; with a feed of twenty thousandths, it would be .00003, or

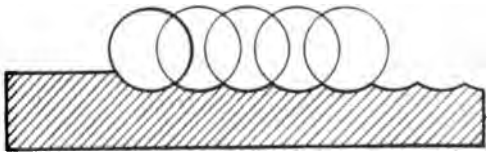
Fig. 92

three hundredths of a thousandth. Since there is only one tooth at work, it might be inferred that, if there were ten teeth, making the feed per tooth in the first instance not fifty thousandths, but only five thousandths, the height of the ridge would be much less than .00019". But this is not so, because a milling cutter never runs absolutely true. In order that a cutter shall run true every tooth of the 10-tooth cutter must be on exactly the same diameter,

Fig. 93

and describe a circle around exactly the same center, and in order to make this all perfect the cutter must be absolutely round; its hole must be absolutely round, its hole must be absolutely concentric with the outside; it must be mounted on an arbor without any clearance whatever; the arbor must be absolutely round and of even diameter; the center of the arbor must be absolutely in line with the center of its taper; the taper must be absolutely round and must fit into the hole of the spindle which again must be absolutely round; this hole in the spindle must be absolutely concentric with the bearing of the spindle; this bearing must be absolutely round and must work without any clearance in the front box. This is a condition which is impossible. In a practical machine all of the points mentioned here will have some variation. The highest degree of workmanship would not avoid some little error in all of these places, and it is fairly certain that the resultant error will be an accumulation of some of these.

If the sum of these errors is only two ten thousandths of an inch (and this would certainly be remarkably good workmanship), then the ridge made by the cutter will be two ten thousandths, regardless of how many teeth are at work. It is the swing of the cutter which makes the ridge. It is only then, when the swing of the cutter is less than two ten thousandths of an inch, that the ridge will be less deep. It is clear, therefore, that the ridge we see is a revolution mark and not a toothmark.

However, if we should increase the feed per revolution to .300", then the height of the revolution mark would be approximately .0006", and in that case, it is very likely that the number of teeth in the cutter will reduce the size of the revolution mark. Fig. 93

represents revolution marks produced by an extremely coarse feed and is the picture of the inaccuracies of the cutter, arbor, spindle, etc., which produce the revolution marks, and superimposed on this are slight depressions representing the toothmarks. It must be remembered that this represents a cut taken with an extremely fast feed per revolution, and that the faster the feed per revolution, the more pronounced the toothmarks will become.

An analysis of the action of the cutter will show that the tooth immediately following the low one (corresponding to the high point on the curve) will reduce the height of the revolution mark somewhat, making it less than the amount actually represented by the error in the cutter, arbor, spindle, etc., but it must be noted that even in these extreme cases the principal mark left on the work is the revolution mark, although the cutter no longer acts as if there were only one tooth.

With a fine feed per revolution, such as is more generally used, the cutter does act, so far as marking the work is concerned, as if it had only one tooth.

Referring again to Fig. 90, it will be seen how difficult it must be for the tooth of the cutter ABC to penetrate into the metal. The conditions shown here are worse than found in actual practice, but only in amount; the nature of the conditions is the same. If we should make the tooth in the form A_1BC, then it would be easier for the tooth to penetrate; there would be no necessity for the tooth to compress the metal downward, and there would be a true cutting action, such as we get with a lathe tool. This form of tooth would have a face which is not radial, but points back of the center; in other words, the tooth is undercut; or to express it as we do with lathe tools, the tooth has RAKE. Using a cutter with rake makes the action much easier. We will treat this subject more at length in the chapter on Milling Cutters.

Action of a Face Mill. In the previous paragraphs we have studied the action of the teeth of ordinary milling cutters, but this is not the action of the teeth of face mills or end mills. The tooth of a face mill acts like a planer tool, or shaper tool, the only difference being that instead of moving over the work in a straight line, it moves in a circle.

Fig. 94 shows a section of a face mill, the body shown in cross-section lines and two teeth projecting. XY is the top of the rough work, and VW is the top of the finished part of the work.

The work feeds against the cutter in the direction of the arrow. It will be seen at once that it is the peripheral edge of the tooth that does the work, taking away a slice every time a new tooth enters, as shown in cross-section, two slices having been represented in the sketch. It is often thought that the face edge of the tooth of a face mill does the cutting, but this is not so; the sketch shows clearly that the cutting is done by the peripheral edge of the tooth.

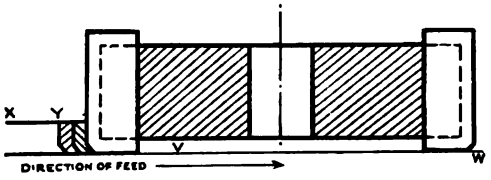

Fig. 94

Fig. 95 is a top view of this same face mill with one tooth shown in position. BW is the portion of the work already traversed by the tooth and XY is the metal about to be cut off. The cutter turns in the direction of the arrow, and takes a slice as shown in cross-section. In order to have a true cutting action, the line AB of the cutter tooth must clear the already finished portion, and the line BC must fall back of the center, the angle OBC being called the rake, and the angle ABD the clearance angle. These rake and clearance angles may vary for different kinds of material and different conditions, but there must be some clearance angle or else the cutter will refuse to cut, and if we wish to cut with some degree of efficiency, there also must be a rake angle, else the metal will be pushed off (the action of a punch) instead of being cut off (the action of a knife).

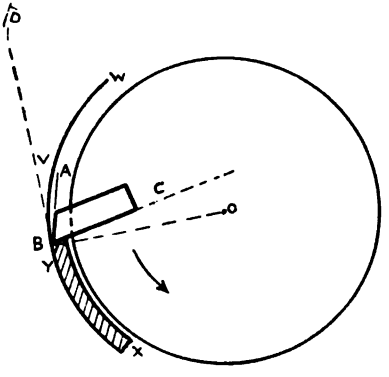

Fig. 95

The chips made by a properly designed face mill resemble planer chips; in fact, it would be impossible to say what machine has produced the chip by simply looking at it; but, if the cutter is not properly designed, then the chips produced will be short and badly crushed—entirely different from those produced by a proper planer tool.

The power required to remove metal will be very much more if the proper angles are not provided, and the life of the cutter,

and, for that matter, the life of the machine also, will be very much shortened.

Action of a Side Mill. A side milling cutter has both peripheral and side teeth. It is a fact, however, that the greater part of the cutting is done with the peripheral teeth, unless the amount of stock to be removed is very small. Fig. 96 shows a Side Milling Cutter at work on a piece of material cutting on both periphery and side.

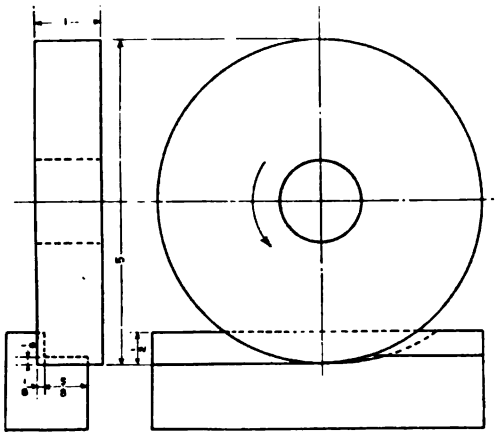

Fig. 96

The amount of metal to be removed is indicated by the dotted lines. Suppose the thickness of this stock is $\frac{1}{8}''$ and the other dimensions as given in the figure; at a speed of 70 feet per minute, we run 54 revolutions per minute. If the feed is very fast, say, 20″ per minute, there will be removed per revolution $\frac{20}{54}$, and as there are 11 teeth, each tooth has a feed of $\frac{20}{594}$, or practically $^1/_{30}''$. It will be seen that at the bottom of the groove, and for a width of $\frac{5}{8}''$, the cutter acts exactly as a spiral mill; that is, it does all the cutting with its peripheral teeth and removes a comma-shaped chip which is $^1/_{30}''$ thick at its thickest part. For the other $\frac{1}{8}''$ of the width of the cut, the cutter also acts like a spiral mill, the only difference being that here the cut is $\frac{1}{2}''$ deep instead of $\frac{1}{8}''$. The surface traversed by each side tooth is $\frac{1}{2}''$ high and $^1/_{30}''$ wide, that is, it is as wide as the chip is thick. This area therefore is $^1/_{60}$ of a square inch. The surface traversed by the peripheral edges of each tooth consists of two parts; one part is $\frac{5}{8}''$ wide and $\frac{1}{8}''$ high; the other is $\frac{1}{8}''$ wide and $\frac{1}{2}''$ high. The first part has an area of $\frac{5}{8}$ x $\frac{1}{8}$ equaling $\frac{5}{64}$ square inches, and the other part has an area $\frac{1}{2}$ x $\frac{1}{8}$ equaling $\frac{1}{16}$ square inch, altogether $\frac{9}{64}$ square inch, therefore it traverses practically nine times as much surface as a side tooth. If the feed were less than 20″ per minute, the surface traversed by the side teeth would be proportionately smaller. It will be seen then that the side teeth perform only a small portion of the total work, and their only function is to clean

up the side of the groove or slot, thus acting merely in a finishing capacity, and at the same time, of course, provide space for the accommodation of the chips produced.

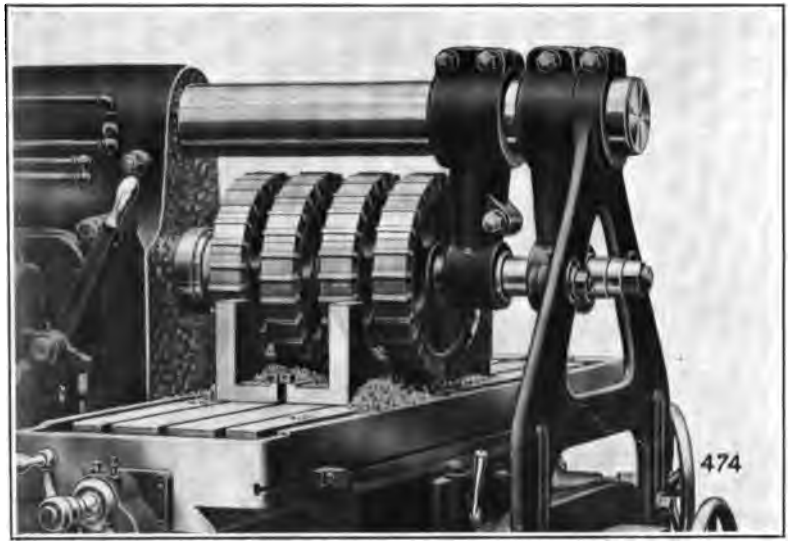

Fig. 96-A
AN ILLUSTRATION OF LARGE SIDE MILLS IN ACTION

The mills in Fig. 96-A are 13½" in diameter, and, in combination with a pair of spiral mills 3" in diameter, they take a cut ⅛" deep across these surfaces, having a width of 27½" at a table travel of 4¾" per minute. They work at a speed of 14 r. p. m. and remove altogether 11½" of metal per minute.. A final finishing cut brings the pieces accurate to within .001".

The work is done on a No. 4 Plain High Power design miller.

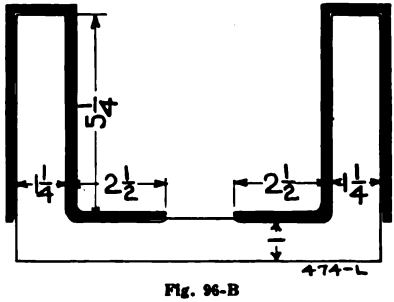

Fig. 96-B

CHAPTER VI

MILLING MACHINE FEEDS

The feed of the Milling Machine is the movement of the table which advances the work against the cutter. On knee and column type machines there are three possible movements of the table; namely, lengthwise of the table (longitudinal feed), crosswise of the table and vertical. In some machines all three feeds are automatic; that is, they are power-driven, but in quite a large number only one power feed is provided, namely, the longitudinal feed.

Two Systems in Use. There are two well-known feed systems in general use—feed in thousandths of an inch per revolution of spindle, and feed in inches per minute. With the first system the feed is driven from the spindle, so that when the spindle speed is increased, the amount of feed per minute will be increased in proportion, but the ratio between the advance of the table and the feed of the cutter will remain the same. The distance between revolution marks will therefore remain the same. With the second system, the feed is arranged in such a way that for any given position of the feed lever there is a fixed amount of feed per minute, regardless of how fast the spindle runs. A change in spindle speed will not affect the quantity of output unless the feed rate is also changed at the same time.

Standard American practice is to make all Cone-Driven Millers with the feed driven from the spindle, and therefore, reading in thousandths of an inch per revolution of the spindle. It would be difficult to arrange such machines with feeds reading in inches per minute, because to do this requires a constant speed shaft to drive from and there is no constant speed shaft on a Cone-Driven Miller. Cincinnati Cone-Driven Millers are provided with 16 feed changes, ranging in the smaller machines from .006 to .250 of an inch per revolution, and in the larger sizes from .007 to .300 of an inch per revolution of spindle.

Standard practice on Millers with constant speed drive is to arrange the feed to read in inches per minute. This is a simple

matter on these machines, because the main shaft always runs at constant speed and the feed is driven from it. There are some advantages in the older system used on Cone-Driven Machines, but except in special cases, these advantages are outweighed by those of the newer system, reading in inches per minute, as will be seen from what follows.

Feeds in Thousandths per Revolution. Let us first consider a machine with feeds reading in thousandths per revolution. Assuming a small end mill requiring a fast speed, say 350 r. p. m. The finest feed available on a large Cone-Driven Machine is .007 per revolution. On some work this feed may be entirely too fast for this small, frail cutter.

Now, let us assume a large cutter requiring a slow speed, say 14 r. p. m. The coarsest feed is .300 per revolution, and the fastest table travel we can get at 14 r. p. m. is 14 times .300″ or 4.2″ per minute, which is entirely too slow in many cases. These extreme cases indicate the limitations of this system. Most milling comes between these extremes and for the usual work the feeds provided are entirely satisfactory. This system has the advantage that it indicates at once the grade of finish; that is, the distance between revolution marks.

Feeds in Inches per Minute. Let us consider a machine with feeds in inches per minute. Assume again a small end mill running 350 r. p. m. The finest feed on Cincinnati High-Power Millers is ½″ per minute. This results in the present case, in a feed of about .0015″ per revolution, certainly fine enough for the frailest cutter.

Now assuming a large cutter at 14 r. p. m., using the coarsest feed of 20″ per minute. We, of course, get a table travel of 20″ per minute, which is a very satisfactory rate of production. This system also has the advantage of indicating at once the rate of production. Cincinnati High-Power Millers are all arranged with feeds reading in inches per minute, the feed box providing 16 changes, ranging from ½″ to 20″ per minute.

Influence of Feed on Production. The rate of production depends directly on the rate at which the work passes under the cutter. It follows, therefore, that the feed used should be as fast as practical. There are certain conditions which frequently arise in practice, which limit the rate of feed that can be used. Quite often the piece is of such a nature that it can not be held rigidly in the holding fixture. In still other cases the piece itself may be too frail

to stand the pressure due to a heavy feed. In such cases there are only two things possible; either reduce the feed (table travel) and do the work slower, or if the machine is cone-driven, reduce the feed per revolution and increase the speed. On a High-Power Machine this latter result is accomplished by simply increasing the speed of the cutter, because this automatically reduces the feed per revolution, therefore, producing smaller chips and consequently less pressure against the work. However, high speeds have a tendency to burn out the cutter, and therefore, if we want to increase production by increasing speeds, we must do something to keep the cutter from burning. This will be discussed more fully in the chapter on Stream Lubrication.

Roughing and Finishing Cuts. Some work is milled with only one cut to produce the desired surface. Other work requires two cuts. In the latter case the roughing cut may be taken without regard to the finish produced, and the only elements to be considered are: the strength of the piece itself, the power of the machine, its ability to stand the strains and the condition of cutter, arbor and fixture. If only one cut is taken, then the finish must also be considered. Using spiral mills, end mills or formed mills, a very satisfactory commercial finish is produced with from .035 to .050″ per revolution. Such a feed, and often even higher feeds may be used for surfaces which are bolted together and which are not required to be oiltight, but for a great variety of work, a finer feed is necessary. Work which must be scraped or which is finish ground will easily stand .030″, whereas work which must have a high finish and does not get any subsequent operation may require a feed as low as .020″ per revolution. When very small end mills are used for such work as die sinking, and rounding out the ends of keyways, and various other delicate operations, a finer feed must be used, not because of the finish, but because of the frailty of the cutter.

The relation of feed to speed on a great variety of cuts in cast iron and steel is given in the diagrams in the following chapter on Speeds of Milling Cutters.

CHAPTER VII

SPEEDS OF MILLING CUTTERS

We are all familiar with the fact that if a piece of work in a lathe runs too fast, the lathe tool will burn out. This term "burning out" is incorrect. What is meant is, that the tool becomes so hot that the temper of the extreme cutting edge is drawn out, and this edge becomes so soft that it refuses to cut further. This holds true whether the tool is a lathe tool, a planer tool, or a milling cutter, the only difference being that with the lathe and planer tool the work moves while the tool is fed into it, whereas with the milling cutter the condition is reversed—the work is fed under the cutter while the milling cutter rotates. A milling cutter is a complicated tool as compared with a lathe or planer tool and we will therefore use the latter in our analysis of the action of cutting tools.

Action of a Lathe Tool. When a lathe tool takes a chip, feeding, say, from right to left, its front end is up against the finished part of the work, its top face is partly covered by the chip as it comes off the work, and its left side is pressed against the work trying to feed into it. There is considerable pressure between the work and the front edge, heavy pressure between the top and the chip, and also heavy pressure between the left side and the work. Meanwhile the work is moving and this movement under pressure causes friction and friction generates heat. It can be easily seen under a magnifying glass that the chip as it comes off the work is broken up into a great number of fine laminations which slide over each other. The breaking up of the chip and the sliding of the laminations both generate heat.

Heating. If a lathe tool takes a chip $\frac{1}{8}''$ deep with a feed of $\frac{1}{32}''$ per revolution, the chip as it comes off has a section much greater than $\frac{1}{8} \times \frac{1}{32}''$, and a different shape; it is not rectangular, but triangular. All this breaking up, sliding, and changing of shape causes a great deal of heat to be developed. In fact, much less than 1% of all the work done on a lathe is used for separating the chip from the work, and all the rest of the work is spent in breaking up

the chip, overcoming the friction between tool and work and between tool and chip. At the same time this useless work is converted into heat, which heats up the tool. Of course, the tool loses some of this heat. If we run at a low speed, taking a fine chip, and using a fairly large tool, the amount of heat generated is relatively so small that the tool can carry it off and conduct it into the body of the machine or radiate it out into the atmosphere as quickly as it receives the heat. It warms up a certain amount until its rate of radiation and conduction are as great as the rate at which it receives heat.

From that moment on the tool does not become any hotter, regardless of how long we keep on cutting. If we should cut faster or take a heavier cut, then the tool will become much warmer before this equilibrium is reached. If we go still further increasing the speed, we finally reach the point where the tool receives more heat than it can dissipate, and then the tool "burns out." We find, however, that the body of the lathe tool is perhaps slightly warm, but certainly not hot, showing that this body had ample capacity to carry off all the heat generated. Why then does the tool burn out?

Imagine that we cut a lathe tool up in slices, starting at the shank end and proceeding toward the cutting edge. The sections become smaller and smaller, and the section close to the cutting edge is very small. This last section, therefore, can not carry off much heat, and besides being completely covered by the work and chip can not radiate heat. In fact, it is protected because both chip and work themselves are hot and may even add to the heat of the tool. We find, moreover, that it is only the extreme cutting edge which is affected.

Application to a Milling Cutter. All that was said about a lathe tool is applicable to a milling cutter. A milling cutter has an advantage in so far that the tooth of the milling cutter stays in the work for only a short time and then rotates through the air, giving it a chance to cool down. If the cut is shallow, the tool is in the work for only a short period of time. If the cut is deep the conditions are somewhat less favorable, but in almost all cuts the period of time during which it cools in the air is much greater than the period of time during which it accumulates heat. If a milling cutter is properly designed and made it is possible to run it at a higher rate than a lathe tool. Unfortunately, most milling cutters are made without rake, and must do three or four times as much work as a lathe tool in order to remove the same amount of metal. All of

this extra work is converted into heat, and this more than offsets the favorable conditions under which a milling cutter works.

The speed of a tool is limited by the fact that it gets so hot that it loses its temper, and this heat is developed by useless work being done, namely, by bending and breaking up chips, and so on. There are THREE DIFFERENT ways by which we could speed up a tool. One, by finding some material of which to make the tool which would not lose its temper no matter how high the temperature. This was PARTLY accomplished by the invention of high-speed steel. A second way, by making a tool of such shape that it merely separates the metal and performs no useless labor. Such tools may be invented some day, and, in fact, a lathe tool has been made which will remove metal without breaking it up. A third way to increase the speed would be to carry off the heat as fast as it is generated. If we can do this, then it makes no difference how much heat is developed by the action of cutting, for all of this heat will be carried off immediately and the tool will become no hotter. Under such conditions, as far as burning out is concerned, ANY speed would be permissible.

To obtain the very best results we should employ all three of these methods; that is, we should have the cutter made of some material which will retain its temper even at a high temperature; it should be constructed in such a way that it does as little unnecessary work as possible, and there should be means of carrying off the heat as fast as it is generated. Under these conditions we can get the highest possible speeds.

Conditions Determining Proper Speeds. IT IS IMPOSSIBLE TO STATE DEFINITELY AT WHAT SPEEDS CUTTERS SHOULD BE RUN, BECAUSE THIS DEPENDS ON TOO MANY CONDITIONS. It depends in the first place on the kind of cutter, in the second on the amount of material to be removed per minute and, not only that, but it depends on the relation between the depth of cut and feed. A cut of $\frac{1}{8}''$ depth and $\frac{1}{8}''$ feed per revolution can be taken at a higher speed than a cut at a depth of $\frac{1}{4}''$ and with a feed of $\frac{1}{16}''$ per revolution, though the amount of material removed per minute would be the same in both cases. It further depends very largely on the rigidity of the machine and the fixture in which the piece is held. It depends also on the rigidity of the piece itself, and last, but not least, on how often we think it economical to regrind the cutter.

We can run at almost any speed if we are willing to regrind

the cutter every five minutes, but this would not be economical. It is also possible to regrind the cutter only once every six months, but we would have to run so slow that again this would not be economical. There is a point where we get the highest efficiency and when a shop has to mill a great number of pieces of one kind, a few figures should be put on paper to determine which is the most economical speed at which to run the cutter.

Influence of Speed on Production.* To illustrate: A shop has to mill 1,000 pieces, and employs two cutters for this purpose, one of which is being reground while the other is in action. We run at such a speed that it takes six minutes to mill one piece. We will assume that it requires three minutes to place the piece in the jig and remove it again, 60 minutes to regrind a cutter, and 40 minutes to reset the machine while the new cutter is put in place. Assume that the speed is such that the cutter must be reground after every 100 pieces. We then have 3,000 minutes to put them in the fixture, 6,000 minutes to mill them, 600 to grind the cutter and 400 to set the cutter. While the grinding of the cutter is being done, the milling still goes on, so that though we have to figure in the labor cost of grinding the cutter, the milling machine is never standing idle, except during the time that we reset the machine for the new cutter. The total time, including sharpening and setting cutters for these 1,000 pieces is 10,000 minutes. (The machine time is 9,400 minutes and the grinding time 600 minutes.)

If we should run the cutter so much faster that the milling could be done in five minutes instead of six minutes per piece, under those conditions we have to grind the cutter more frequently than once in every hundred pieces, as in previous examples. Let us assume that X represents the number of times we must grind the cutter per hundred pieces, then we would like to know how often we may grind this cutter without losing time. In order not to lose time we must mill all these 1,000 pieces in 10,000 minutes, and we must remember that if we grind the cutter X times as often, we also must

*In order to keep this illustration as simple as possible, so that the principle involved may not be confused with the wage factor, it is assumed that the value of an hour's work on the cutter grinder equals that of an hour's work on the milling machine. If, in the illustration which assumes the use of only one cutter, the milling machine operator also does the cutter sharpening, the result appears to be better, because the operator is not idle, but *the milling machine is idle and milling production suffers.* The important thing is to keep the milling machine going at the right rate, and as nearly continuously as possible.

reset the machine X times as often. The cutting now takes place in 5,000 minutes. It takes 3,000 minutes to put the piece in the fixture; X times 600 minutes to grind the cutter; X times 400 minutes to reset the machine; altogether 10,000 minutes.

5,000+3,000+400 X+600 X=10,000. Therefore, X=2. In other words we may grind the cutter once for every 50 pieces. The machine time in this case is 8,800 minutes and the grinding time may be 1,200 minutes.

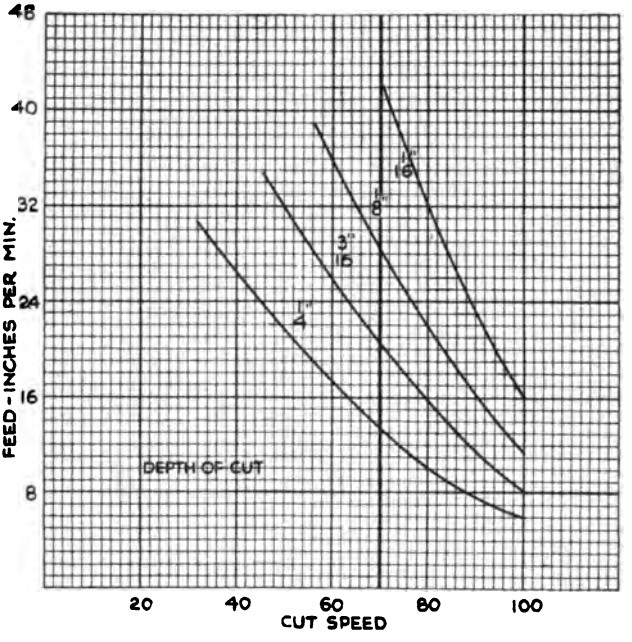

Fig. 97. Spiral Mills
Roughing cast iron

This means if we reduce the cutting time from six minutes to five minutes, we may grind the cutter twice as often as before and not lose time. If we find that we have to grind the cutter less than twice as often, we would gain time, but if we find that we have to grind the cutter more than twice as often, we lose time.

The figures show a rather striking result. A reduction of the cutting time from six minutes to five minutes, that is, an increase in speed of 20%, would allow us to regrind the cutter twice as often provided we had two cutters. If we increase the cutting speed so as to reduce the cutting time from six minutes down to four minutes,

we might grind the cutter three times as often and not lose time. If we had only one cutter the machine would stand idle during the additional time that the cutter is being reground and we would get an equation very similar to the previous one, except that we must figure in the time during which the machine stands idle, which is just as long as the time during which the cutter is being reground. Assuming that the machine and operator are both idle

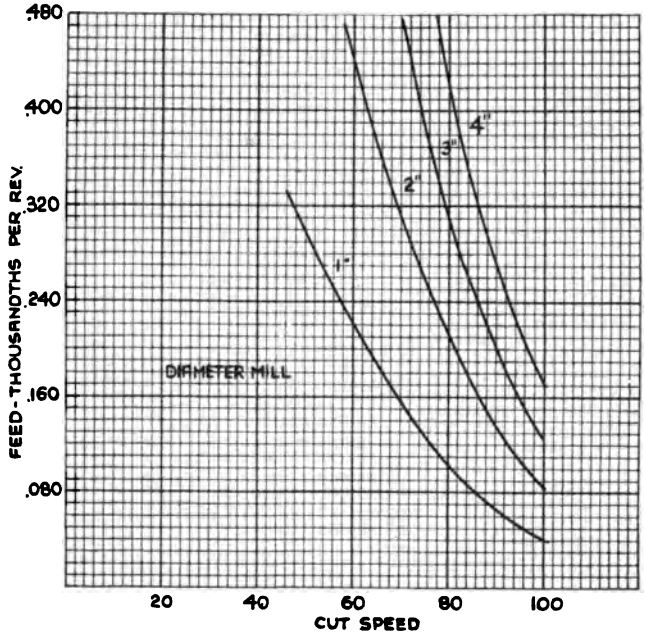

Fig. 98. Spiral Mills
Roughing $\frac{1}{16}$" deep, cast iron.

while the cutters are being ground, then the machine time (which includes the times the machine is actually milling, is standing still for the cutter to be removed and reset, and standing still while the cutter is being resharpened) is 10,000 and grinding 600 as before, making the total time 10,600. This equation then would be:

$5{,}000+3{,}000+400\ X+600\ X=10{,}600$, and therefore, $X=\frac{2}{16}$ or $\frac{1}{8}$.

In other words, under those conditions, we may regrind the cutter only one and five-eighths times as often as before.

It will be readily seen that if it takes a longer or shorter time to grind a cutter or to reset the machine, and if the proportions between

chucking time and cutting time are different, the value of X will be different also.

In our own practice parts are made in comparatively small lots—several hundred at a time—and we aim to use such a combination of feed and speed as will enable the cutter to stand up for one complete lot of pieces without resharpening.

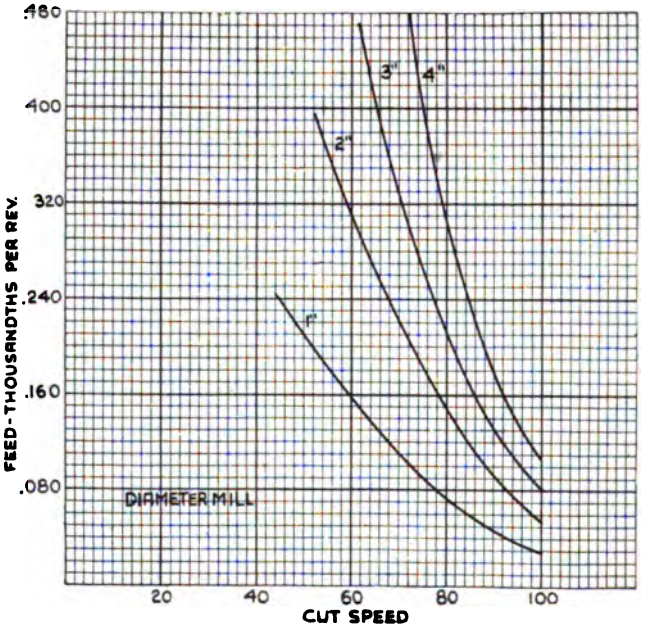

Fig. 99. Spiral Mills
Roughing ⅛" deep, cast iron.

Practical Cutting Speeds. The diagrams, Figs. 97 to 109, were developed from our own practice.

We make parts in comparatively small lots and plan our feeds and speeds so that a cutter will mill a complete lot without resharpening. The life of the cutter is therefore a factor entering into these curves. They are applicable to modern machines equipped with the latest design cutters and ample lubrication, where lubricant is used. They do not show the maximum feeds and speeds that can be used, but are a safe guide for those who are responsible for production. It is entirely practical to very greatly exceed these feeds and speeds on some work, but if the equipment consists of the usual form of standard cutter as found in stock, it is necessary to reduce

the results shown by these speed curves a very substantial amount before they can be applied.

Roughing Cast Iron with Spiral Mills. The diagram in Fig. 97 shows cutting speeds and feeds when milling cast iron at different depths of cut with a 3″ diameter cutter. The variables are the depth of cut, the feed in inches per minute, and the cutting speed. That part of the curves shown to the right of the heavy vertical line

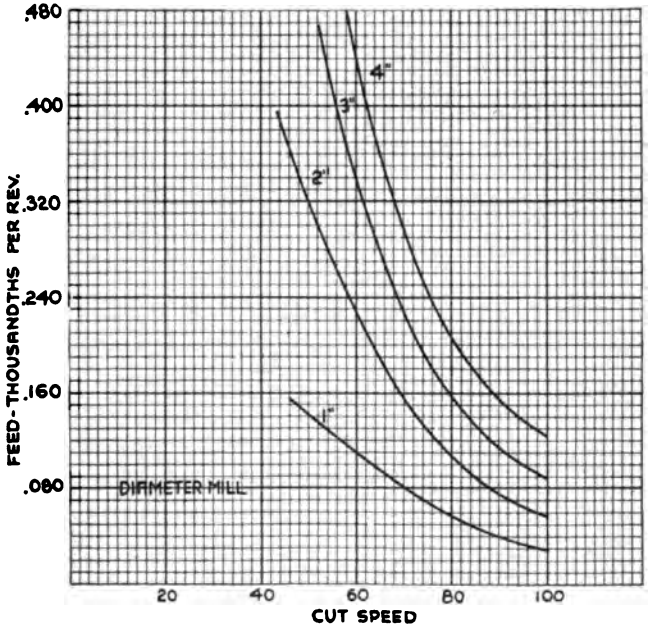

Fig. 100. Spiral Mills
Roughing $\frac{1}{8}$″ deep, cast iron.

drawn at 70 feet per minute cutting speed, represents good practice. The use of these curves will be evident from the following:

Suppose we are to take a cut $\frac{1}{8}$″ deep in cast iron and wish to run 80 feet per minute cutting speed. The curves will show that the most efficient feed rate to be used, providing the work and cutter will stand it, is 22″ per minute. On the other hand, suppose we have a piece of work which we feel should go through the machine at a feed of 12″ per minute. If the cut is again $\frac{3}{16}$″ deep, we may run as fast as 88 feet per minute cutting speed. It must be noted that the above diagram does not take into account that influence the diameter

of the cutter has on the permissible speed. It is good for cutters from 3″ to 3½″ in diameter.

The diagrams in Figs. 98, 99, 100 and 101 should therefore be referred to for more exact results for cutters of other diameters.

The curves in Fig. 98 are based on cuts $\frac{1}{16}$″ deep. Now, assuming a cutter 4″ in diameter and a roughing cut at .240″ per revolution: It will be safe to run the cutter 92 feet per minute. Similarly, the

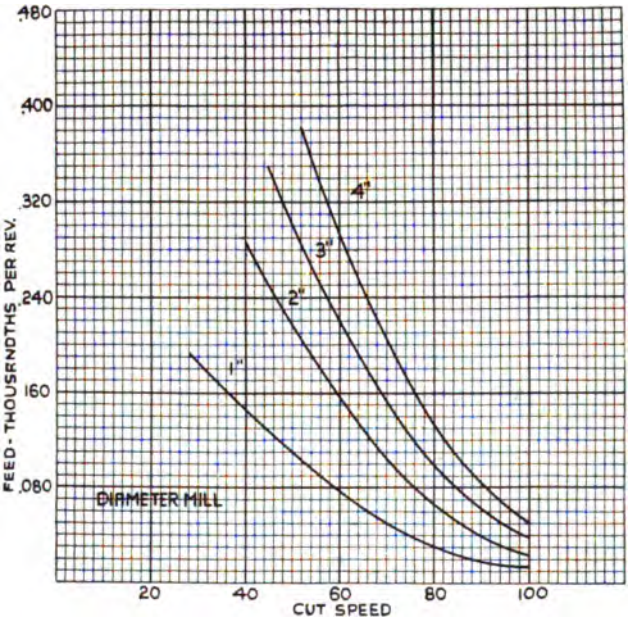

Fig. 101. Spiral Mills
Roughing ¼″ deep, cast iron.

curves in Fig. 99 show that under these same conditions and with a cut ⅛″ deep, the best cutting speed is 84 feet per minute.

Fig. 100 shows that with a cut $\frac{3}{16}$″ deep the best speed is 76 feet per minute, and Fig. 101 shows that with a cut ¼″ deep the best speed is 65 feet per minute.

These figures show a range in speed from 65 to 92 feet cutting speed. Generally speaking, 70 to 75 feet cutting speed is good practice when milling a high-grade of cast iron, such as is used in the better class of machine tools.

The above curves are based on wide spaced, wide angle cutters.

When using these curves in connection with the older form of standard cutters as found in stock, the results shown on these curves should be reduced to from one-third to one-half of their values before applying them.

Finish Milling Cast Iron Using Spiral Mills. Fig. 102 shows curves based on good practice for finishing cuts $\frac{1}{64}''$ and $\frac{1}{32}''$ deep, but this again does not take into consideration the influence

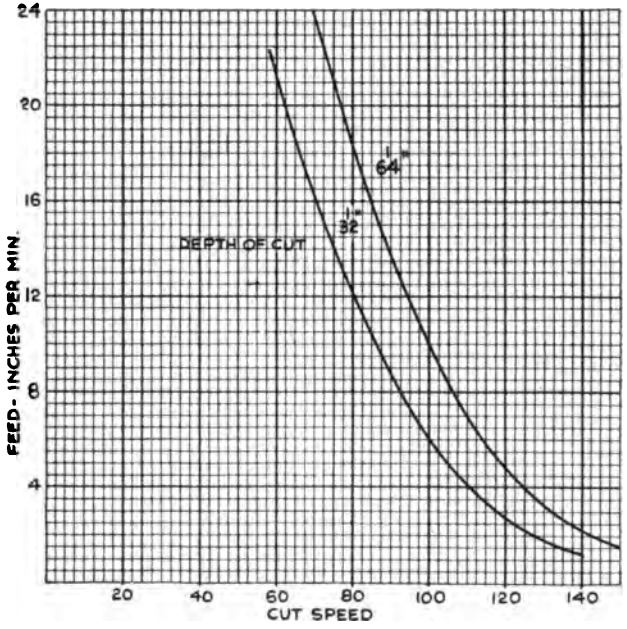

Fig. 102. Spiral Mills
Finishing, cast iron.

of diameter of cutter. These curves are a good guide for general practice. For more exact results, refer to Figs. 103 and 104, which are based on the use of cutters of different diameters. The values of these curves shown between the heavy horizontal lines drawn at .050″ and .060″ per revolution indicate the feeds and also the corresponding speeds which we consider good practice for finishing cuts on surfaces which will afterwards be polished. For producing the finer grades of finish, suitable for scraping, the values of the curves shown between the horizontal lines drawn at .024″ and .030″ feed per revolution should be used. If the cutters are sharp and the

equipment is in good order, this feed rate will produce an excellent finish.

Assuming again our 4″ diameter cutter and a feed of .023″ per revolution: Fig. 103 shows that with a finishing cut $\frac{1}{64}$″ deep, it is safe to run the cutters 130 feet per minute, and Fig. 104 shows that for a finishing cut $\frac{1}{32}$″ deep, it is safe to run the cutters 120 feet per minute.

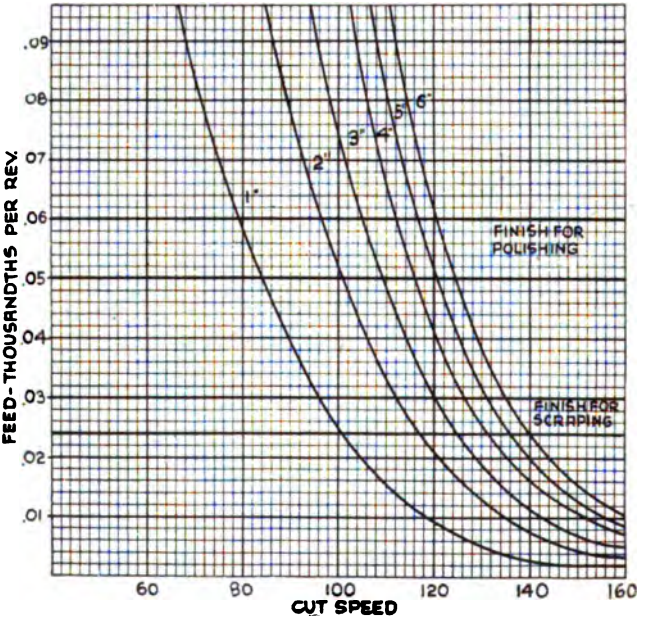

Fig. 103. Spiral Mills
Finishing $\frac{1}{64}$″ deep, cast iron.

Speeds and Feeds for Shell End Mills. The diagram, Fig. 105, shows curves based on good practice when using end mills, taking cuts from $\frac{1}{8}$″ to $\frac{3}{16}$″ deep in cast iron. In all of these curves the depth of cut remains constant, the variables being as before, the feed in inches per minute, the cutting speed and diameter of the cutter, and there is also the additional variable, width of cut.

We find from these curves that if we want to take a cut 2″ wide with a 3″ diameter end mill, we can run about 75 feet cut speed and at a feed of 11″ per minute. Should we wish to take a cut 3″ wide, with a 3½″ diameter cutter, we find that we can run practically 60 feet cut speed and use a feed of 9½″ per minute, and so on.

A very interesting additional feature of these curves is found below the 50-foot cut speed curve, the application of which is as follows:

Suppose we are taking a cut 2½" wide with a 2½" diameter cutter at 50 feet cut speed. We can feed safely 6½" per minute. However, if for some reason we should find it preferable to feed only 3" per minute, then we can run 100 feet cut speed with safety. In the same way, with a 3½" diameter cutter, taking its full width

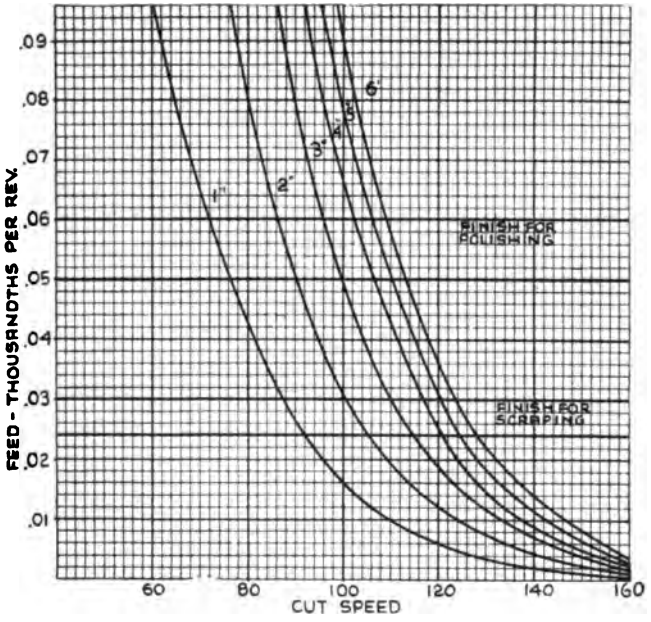

Fig. 104. Spiral Mills
Finishing ¼" deep, cast iron.

of cut, namely 3½", the proper speed is 50 feet and the corresponding feed is 8½". However, at 5½" per minute feed on this same cut, we can with safety run 80 feet cut speed, and so on. From this it will be seen that all of the diagram lying above the 50-foot cut speed curve shows the relation between feed, speed, diameter of cutter and width of cut. That part of the diagram which is below the 50-foot curve applies only to the maximum width that each cutter can take, it of course being clear that a 3" diameter end mill can not take a cut greater than 3" wide. This part of the diagram is useful in showing the extent to which the cut speed may be increased when

the feed is reduced, the diameter of the cutter and the width of cut remaining constant.

This diagram is based on actual practice in our shop, using modern wide-spaced shell end mills. For the older style of end mills as found in stock, the values shown by these curves should be reduced by 25% to 35%.

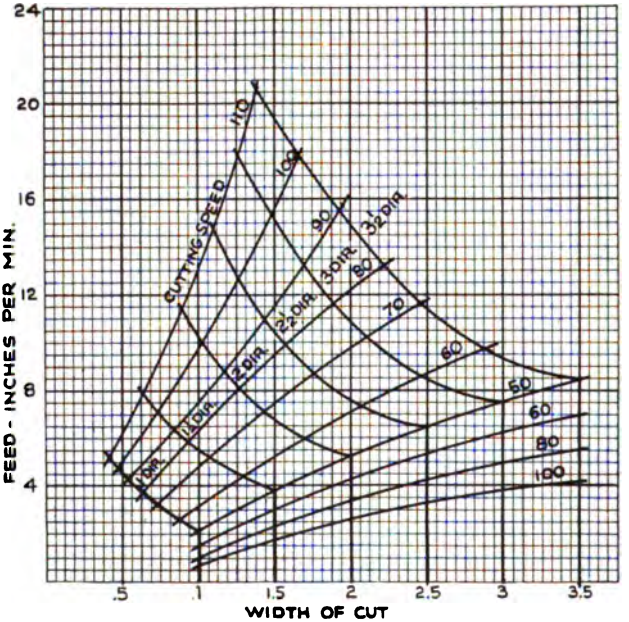

Fig. 105. Shell End Mills
Broken corners. Roughing, cast iron $\frac{1}{8}$"-$\frac{1}{16}$" deep.

Face Milling Cast Iron. Fig. 106 shows a set of curves for High Power Face Mills and Standard Face Mills for both roughing and finishing cuts which have a width approximately equal to the diameter of the cutter. From these we find that at a feed of 12" per minute a High Power Face Mill can very safely run 62 feet cutting speed for roughing and 82 feet for finishing. A Standard Face Mill, that is, one of the lighter design, should run about 50 feet cutting speed for roughing and 73 feet for finishing, and so on. At a feed of 8" per minute, the speeds become for a High Power mill 68 feet for roughing and 89 feet for finishing, and for a Standard mill, 56 feet for roughing and 79 feet for finishing.

Spiral Milling in Steel with Stream Lubrication. Fig. 107 is a general diagram based on cuts $\frac{1}{16}$", $\frac{1}{8}$", $\frac{3}{16}$" and $\frac{1}{4}$" deep,

taken with a wide spaced, wide angle spiral mill with rake, in cold-rolled machinery steel with an ample supply of cutting lubricant. Assuming a feed of 8″ per minute, the corresponding speed for a cut ¼″ deep is 62 feet; for $\frac{3}{16}$″ deep, 80 feet; for ⅛″ deep, 104 feet, and for $\frac{1}{16}$″ deep, 128 feet per minute. Finishing cuts $\frac{1}{64}$″ to $\frac{1}{32}$″ deep in machinery steel under the above conditions of ample lubrication, should under good shop conditions be taken at a cutting

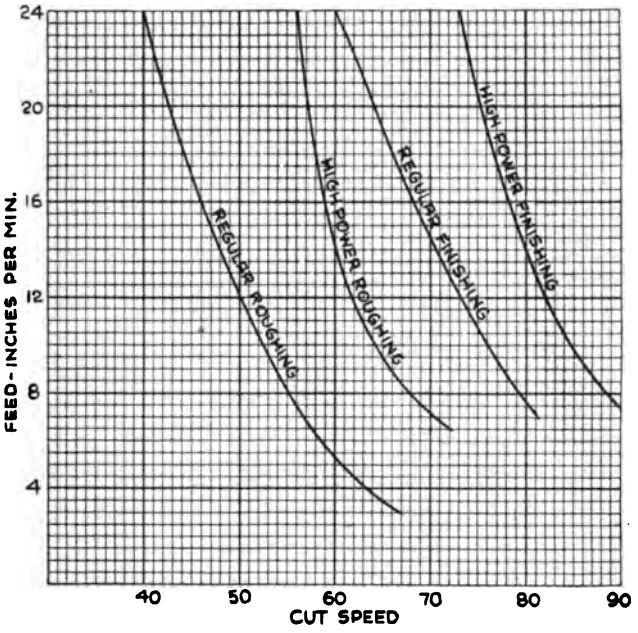

Fig. 106. Face Mills
Roughing and Finishing, cast iron.
Depth of cut, roughing ⅛ to ⅕, finishing $\frac{1}{32}$ to $\frac{1}{64}$.

speed of 150 to 160 feet per minute. When the equipment consists of the older form of cutters, such as can be bought from stock, and the lubricant is used in limited quantities, the above figures should be reduced to from ¼ to ⅓ of the values shown in the curves before they are applied.

Face Milling Steel. Fig. 108 is used in exactly the same way as Fig. 106, except that it shows the relation between feed and speed when milling steel, whereas Fig. 106 applies only to cast iron. This diagram is again based on roughing cuts from ⅛″ to $\frac{3}{16}$″ deep, and finishing cuts $\frac{1}{64}$″ to $\frac{1}{32}$″ deep on cuts having a width equal to from ½″ to ¾″ the diameter of the cutter.

If we want to take a roughing cut at 16″ per minute the diagram shows at once that we can use about 80 feet cut speed. A finishing cut at 16″ per minute can be safely taken at 94 feet cut speed, and so on.

The separate curve at the left of the diagram applies to roughing cuts ¼″ deep and 6″ or more in width. These exceptionally heavy cuts of course can not be taken at such high speeds and fast

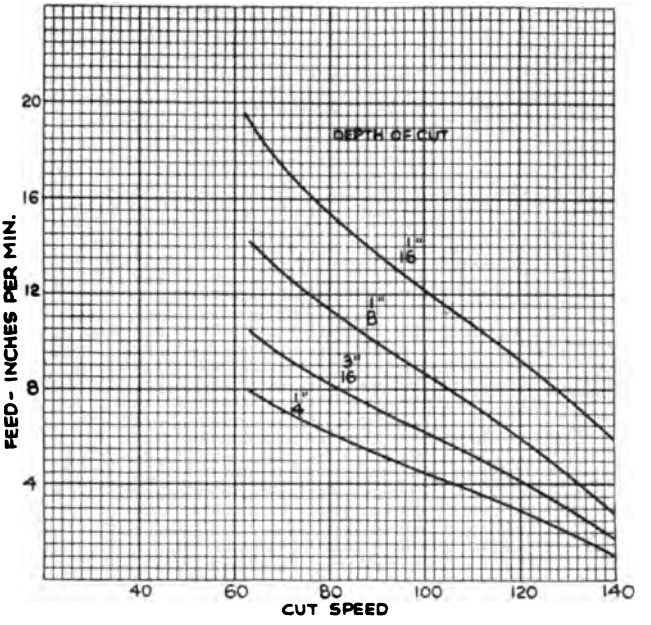

Fig. 107. Spiral Mills
Machinery steel. Stream lubrication.

feeds. For instance, at a feed of 12″ per minute the cut speed should not be more than 60 feet.

Keywaying. Fig. 109 is again based on modern cutters supplied with ample lubricant and milling nickel steel drop forgings 1½% N., .30 to .40 carbon, .40 to .60 Chr., and also when milling the grade of machinery steel known as hub stock. There are two sets of curves shown. We will first consider the curves based on a 2½″ diameter cutter. This is a cutter of our latest design, as described in the chapter on that subject, and it will be seen that with a feed of 8″ per minute, a cutting speed of 30 feet can safely be used in chrome nickel steel, and in hub stock a cutting speed of 73 feet

is about right. With cutters of the older design these results should again be reduced.

The other two curves, which refer to a special staggered tooth cutter, are based on the use of the cutter shown in Fig. 110. This is a cutter 4″ in diameter, $\frac{9}{16}$″ face, with inserted teeth, as shown. Its construction makes it possible to take advantage of the best cutting angles and it will be noted that the teeth are far apart and

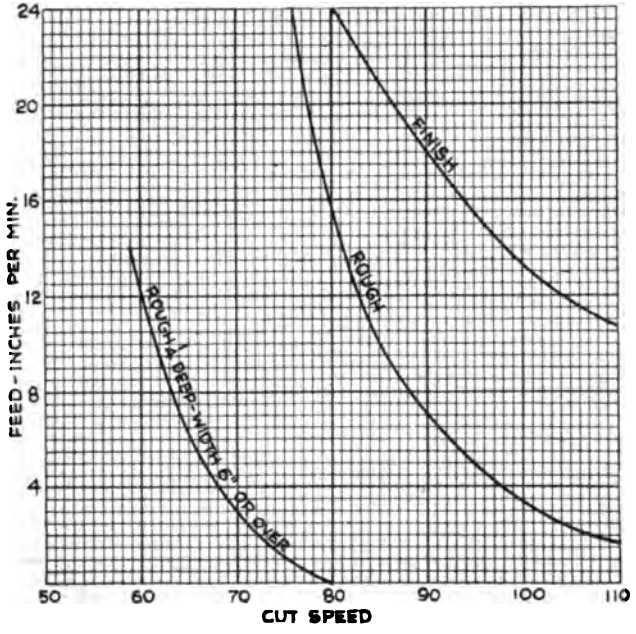

Fig. 108. Face Mills
Steel castings and machinery steel.
Width of cut, ½ to ¾ the diameter of the cutter.

each tooth removes a chip which is only part of the full width of the cut. It therefore has not only a free cutting action, but the chips are entirely free to get out of the way throughout all stages of the cut.

Referring to the diagram, it will be seen that at 8″ per minute feed this cutter mills chrome nickel steel safely at 102 feet cutting speed, and a corresponding increase over the other cutter when milling hub stock. These curves and this cutter are shown to indicate what was meant in a preceding paragraph which stated, that for special cases, the speeds and feeds given in these curves can be very greatly exceeded.

The Cincinnati Milling Machine Company recently carried out extensive experiments to determine maximum cutting speeds that could be taken with a modern milling machine equipped with proper cutters and provided with ample cutting lubricant or coolant properly applied. Machinery steel was cut at speeds of 400 to 450 feet per minute when taking cuts not deeper than ⅛", 250 to 350 feet per minute when taking cuts ¼" deep, and keyways ¾" wide and ⅜" deep were milled at a cutting speed of 400 feet per minute.

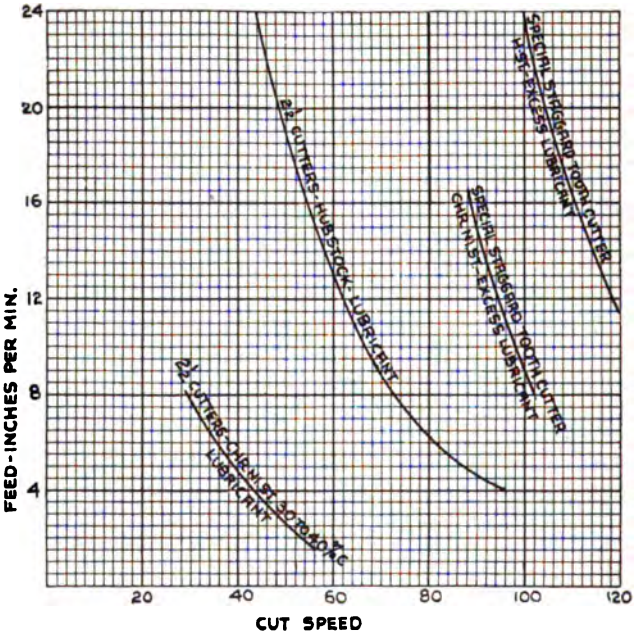

Fig. 109. Keywaying
Machinery steel. Stream lubrication.

Nickel steel, heat-treated, was milled at 150 feet cutting speed, taking cuts ¾" wide, ⅞" deep.

Vanadium steel of great hardness was milled at a cutting speed of 190 feet per minute.

Tool steel, 1.25% carbon, such as is used for certain classes of reamers, was milled at a cutting speed of 200 feet per minute. The results of these tests are given in detail in Chapter VIII, on Stream Lubrication.

Safe Practical Speeds. In general practice the following cutting speeds can be safely used with modern cutters, and an

ample supply of coolant for the cutter on that work which requires coolant:

Cast Iron

SPIRAL MILLS

Rough milling..... 65 to 75 feet
Finish milling..... 80 to 120 feet

FACE MILLS

Rough milling..... 65 feet
Finish milling..... 80 to 110 feet

Machine Steel

SPIRAL MILLS

Rough milling..... 70 to 75 feet
Finish milling.....100 to 140 feet

FACE MILLS

Rough milling..... 60 to 85 feet
Finish milling..... 90 to 110 feet

Tool Steel—Annealed

SPIRAL MILLS

Rough milling..... 50 feet
Finish milling..... 70 to 80 feet

Chrome Nickel Steel (.30 to .40 carbon drop Forgings)

Rough milling..... 45 feet

Tobin Bronze

SPIRAL MILLS WITH LUBRICANT

Rough milling ..... 90 feet
Finish milling .....125 to 150 feet

Brass.....200 feet

Aluminum.....600 to 1,000 ft.

Other Factors Which Determine the Life of the Cutter. The failure of the cutter is not always due to excessive speed. When the metal is gritty a grinding action takes place, which by and by dulls the cutter. This is especially true when cutting cast iron. For that reason special attention must be paid to the clearance angle of cutters, which will be taken up more in detail in the chapter on construction of Milling Cutters.

Fig. 110. Adjustable Inserted Tooth Slotting Cutter

(Patent applied for)

Then there is also the legitimate wear on the cutter caused by the edge rubbing over the work and the pressure of the chip against the teeth. This wear is not greater with fast than with slow speeds, but, if with slow speeds the cutter will be dulled in two days, with twice the speed it may become dulled in one day. The AMOUNT of work performed by the cutter will be the same for the same amount of wear, but the TIME required for doing it with fast speeds will be very much less than when slow speeds are used.

For example: Assuming a piece of work that can be milled at 100 rev., and that the feed per revolution should be .200″. The resultant table travel will be 20″ per minute. Now, if we run the cutter 50 rev. and use the same feed rate, the table feed will be 10″ per minute, only one-half as fast as before. The cutter will be doing only one-half as much work and will last twice as long.

On the other hand, if we feed 10″ per minute at 50 revolutions and then increase the speed to 100 revolutions, but do not increase the feed, production will not be increased and the cutter will, theoretically, last only half as long when milling the same number of pieces, because the cutter makes twice as many chips and therefore comes in contact with the work twice as often since the chips are only half as big as before. Some data confirming this are given in the next paragraph. INCREASING THE SPEED ALONE DOES NOT INCREASE PRODUCTION.

Life of Cutters When Milling Cast Iron. Some very valuable experiments were made by the Cincinnati Milling Machine Company on the effect of cutting lubricant on the life of the cutter when milling cast iron. The result of these tests is shown in the accompanying table. The cast iron bar milled was in each case

36″ long. All cuts were taken on scale. The cutter used was our standard slotting cutter, but with only one tooth operating, all the other teeth having been removed.

Cutter—5″ diameter, ¾″ face. Arbor—1½″.
Speed of cutter—72 r. p. m. Cut—$\frac{3}{32}$″ deep, ¾″ wide.

Effects of Use of Lubricant and the Size of Chip on the Life of a Cutter Milling Cast Iron

No. of Cuts	Feed per Min.	Feed per Tooth	Total Distance Traveled per Sharpening	Total Wear of Tooth (Radial)	Wear of Tooth per 100″ Traverse	Remarks	
3-a	.5	.0069	108″	.0035	.00324	Lubricant.	No Brace
3-b	.5	.0069	108″	.003	.00277	Dry.	No Brace
3-c	1.0625	.0147	108″	.0035	.00324	Lubricant.	No Brace
3-d	1.0625	.0147	108″	.00325	.0030	Dry.	No Brace
3-e	1.0625	.0147	108″	.0015	.00138	Lubricant.	With Brace
3-f	1.0625	.0147	108″	.001	.00092	Dry.	With Brace
3-g	.5	.0069	108″	.00275	.00254	Lubricant.	With Brace
3-h	.5	.0069	108″	.003	00277	Dry.	With Brace
6-i	2.25	.03125	216″	.0005	.00023	Dry.	With Brace
6-j	2.25	.03125	216″	.00025	.000125	Lubricant.	With Brace
6-m	1.0625	.0147	236″	.002	00084	Dry.	Braces
6-n	1.0625	.0147	236	.00375	.0015	Lubricant.	Braces

The above tabulation shows some very interesting things. For instance, cuts a, b, c and d were taken with the outer end of the arbor supported from the overarm, but not tied to the knee with braces. This, therefore, allowed a slight amount of vibration, not sufficient to be noticeable, but it nevertheless existed and had its effect on the life of the cutting edge of the cutter. Comparing cut c for instance, with cut e, shows that with the braces, the wear on the cutting edge was not quite one-half as much as without braces. In the same way, comparing cut a with cut g, an improvement is again shown when the braces are used.

We will consider here, only those cuts taken when the machine was equipped with braces. Let us first consider the effect of lubricant. Cuts e and f show that there was less wear when running dry, while cuts g and h show slightly in favor of lubricant. This is also true when we compare i and j. In the same way, comparing m and n, the result seems to indicate that it is better to run dry on cast iron.

The conclusion to be drawn from all this is, that there is no advantage in using lubricant when milling cast iron, if we consider alone the question of the life of the cutter. However, it has been very clearly demonstrated that when milling frail pieces at a high speed rate, there is a decided advantage in using fast feeds and lubricant, when milling cast iron parts of this character, because of the cooling effect of the lubricant, which prevents the heating of the piece and in consequence, warping out of shape. It must be noted, however, that we do not recommend this, because whenever it has been tried on manufacturing operations it was found that the lubricant carried small particles of iron into the bearings of the machine, and caused such rapid deterioration that it was not practical to keep the machine in proper adjustment to do rapid, accurate work.

Effect of Size of Chip on Life of Cutter. Even more interesting than the effect of lubricant is the effect of the size of the chip as shown by these figures. Comparing cuts e and g we find that with a feed of 1″ the wear on the cutter is .00138, whereas when feeding ½″ the wear on the cutter is .00254 when the distance milled in each case is 108″. In other words, feeding ½″ per minute, the cutter came in contact with the work twice as often in milling a distance of 108″, as it did when feeding 1″ per minute, and the wear on the cutter was approximately twice as great.

Again comparing cuts h and i. Cut i was taken with a feed 4½ times as fast as cut h, while the wear on the cutter at the slower feed per 100″ of traverse was nearly 10 times as great as the wear on the cutter at the faster feed.

These figures indicate quite clearly that the dulling of the cutter is in direct proportion to the number of contacts which the cutter-tooth makes with the work in a given length of travel. We believe that an entirely safe conclusion is that the wear per contact; that is to say, the wear per chip produced, is approximately the same for different sizes of chips when milling cast iron within the practical limits of milling. In other words, if we use a chip per tooth of .007″, the cutter will make as many chips and in consequence will be dulled to the same extent when milling a piece 100″ long as it will when taking a chip .014″ thick, milling a piece twice the length, that is, a piece 200″ long. All this shows the desirability of using the fastest feed that other conditions will permit.

CHAPTER VIII

STREAM LUBRICATION CUTTER AND WORK COOLING

It was found by experimenters that lubricant on a tool does something else besides producing a smooth surface. It also acts as a coolant and there has been a great deal of discussion as to whether the benefits are due to the fact that the fluid lubricates, or whether they result from its cooling effect. We will not consider here the action of the fluid as a lubricant, but only as a coolant.

The limitation of the cutting speeds results from the fact that the act of cutting makes the extreme edge of the tool hot enough to draw its temper. Carbon steels lose their temper at a relatively low heat. High-speed steels differ from carbon steels in this respect only—that they can stand a much higher temperature before losing their temper.

Generation of Heat by Cutting Tools. Most of the experiments above referred to were carried out on the lathe, and are briefly discussed in the preceding chapter. But what applies to a lathe does not necessarily apply to a milling machine. A lathe tool is constantly embedded in the work and the top of the lathe tool is constantly covered by the chip, so that the cutting edge of the tool, which is the part to be kept cool, receives very little, if any, of the lubricant, consequently it gradually accumulates heat, but it does not burn out because it also loses part of this heat. Finally a point is reached at which it loses heat about as fast as it receives it and, therefore, remains at an approximately constant temperature. When this temperature is the highest the tool will safely stand, then the speed, which produces this temperature, is the highest safe speed for that tool under the conditions assumed.

A milling cutter works under entirely different conditions. A tooth enters the work, removes a chip and leaves the work, then travels through the air for the greater part of a revolution. It therefore has a better chance to dissipate the heat received than a lathe tool. But what is far more important, the fact that the cutter tooth is free of the work a large part of the time, gives an oppor-

tunity to apply artificial means for carrying away the heat as fast as generated and thus keep the cutter cool at high speeds.

The Cincinnati Milling Machine Company has carried on a long series of experiments to determine the most effective method of applying cutting lubricant and the extent to which speeds and, therefore, production, can be increased by the use of a sufficient volume of lubricant properly applied.

It was found that the nature of the lubricant does not affect the cutting speed, provided the quantity is sufficient. It was further found that in the majority of cases the quality of finish is equally good with the cheaper compounds as with pure lard oil, when sufficiently large quantities of lubricant are used.

The speed at which it is possible to run the cutter depends primarily upon the volume and method of application of the lubricant. The average small stream as usually provided, is by no means sufficient to secure ample cooling. After numerous trials we developed a system which deluges the cutter and work with lubricant, and as a result, we are able to greatly increase the speeds over those formerly attainable, and still keep cutters and work cool.

These experiments formed the subject of an editorial in the "American Machinist," by the editor, Mr. L. P. Alford. It appeared in the issue of April 16, 1914, and as it gives important data on the experiments as recorded by an impartial observer, the editorial is reproduced on the following pages.

Editorial from the American Machinist, April 16, 1914:

"Progress in the art of cutting metals, as in all other lines of human endeavor, has been a slow advance with occasional sudden, pronounced jumps, followed by the same slow advance. One such jump came in 1900, with the announcement of the development of high-speed steel. This was first presented to the AMERICAN MACHINISTS' readers in the issue of August 9, 1900. The feature was high speed. The editorial note said:

The appearance of a large lathe turning a 17" steel shaft at this speed (150 feet per minute) is nothing less than startling.

This article, I believe, is the announcement of the beginning of another jump in this curve of progress, at least as it affects multi-toothed cutting tools. The startling feature as in the case of high-speed steel, is the speed. Tests have shown peripheral cutter

speeds and work feeds in steel, some eight to twelve times greater than those used in ordinary milling practice.

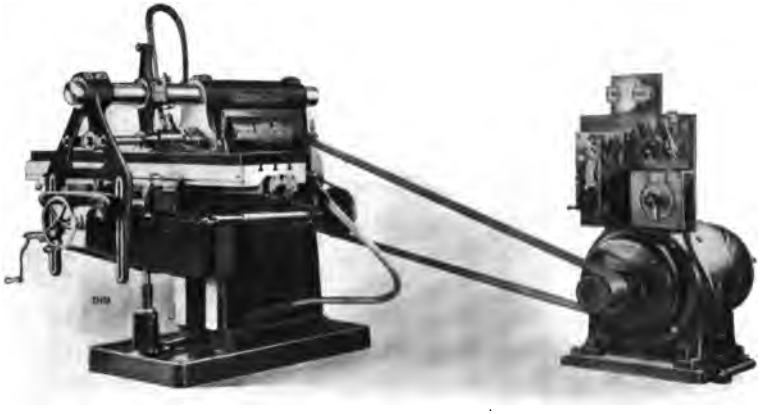

Fig. 111

Miller upon which high-speed milling tests were run. Cutter speeds 500 r. p. m. = 458′ per minute. Work feed 30½″ per minute. Depth of cut ⅛″. Material, machinery steel, 0.2 carbon, 0.5 manganese.

THE CINCINNATI MILLING MACHINE COMPANY'S PROGRESSIVE EXPERIMENTS. The conditions which have made these tests possible are the direct result of the work that the Cincinnati Milling

Fig. 112

Chips removed by one cut across mild-steel block, 5 by 18″, shown in Fig. 111.

Machine Company, Cincinnati, Ohio, has done during the past six or eight years. In 1908 the AMERICAN MACHINIST showed the line

of Cincinnati High-Power Millers. Since that time this line has undergone progressive improvement, particularly in the selection of better materials. At the Pittsburgh meeting of the American Society of Mechanical Engineers in 1911, A. L. De Leeuw, until recently chief engineer of the company, presented a paper on Milling Cutters and Their Efficiency. A feature of this was data on the use of cutters with wide spaced teeth. This paper was abstracted on pages 753 and 787 of Vol. 35.

Last year was shown this firm's Semi-automatic Miller, which was adapted for much higher cutting speeds and table feeds than were in common use for that general type of machine when it was designed.

These developments set up the conditions of powerful, heavy machines, an extensive use of cutters with wide-spaced teeth, which permitted increased feeds, and experience with feeds and speeds somewhat higher than average practice. From this foundation experiments were begun with much higher work feeds and cutter speeds. The illustrations, Figs. 111 to 123, inclusive, show in graphic fashion some of the results. Details of the system have been made the subject of patents.

Fig. 113. Stream Lubrication

No. 5 Plain High-Power Miller showing hood, container and drainage pipe.

To show what these results are, I can do no better than to give the records of the tests that I have witnessed. The machine upon which the high-speed tests were run is shown in Fig. 111. This is a No. 5 High-Power Cincinnati Miller driven by an independent motor, with a speed of the constant-speed pulley 50 per-cent greater than that for which the machine was designed. The steel cut was a mild machinery steel, 0.2 carbon, 0.5 manganese, having an ultimate tensile strength of from 55,000 to 65,000 pounds per square inch. The cutters were all of high-speed steel.

TEST NO. 1. Cutter, spiral mill, 25° angle, 3½″ diameter, 9 teeth, 10° rake, 6″ long. Arbor 1½″ diameter. Depth of cut ⅛″, width 5″, length 18″. Speed of cutter 500 r. p. m., peripheral speed 458 feet per minute. Feed 30½″ per minute. Finish good for commercial milling where surfaces are to be bolted together.

TEST NO. 2. All conditions the same as for Test No. 1, except that the depth of cut was reduced to 0.02″, and the feed to 7.23″ per minute. The finish in this case was good enough to polish.

TEST NO. 3. Cutter, a helical mill 3½″ diameter, 6″ long, 3 teeth, angle with axis 69°, rake 15°, arbor 1½″, cutter speed 510 r. p. m., peripheral speed 470 feet per minute, feed 30½″ per minute. Two cuts were taken, the first with a depth $\frac{1}{16}$″, the second with a depth of $\frac{3}{16}$″.

Fig. 114
Stream lubrication on Semi-automatic Miller; hood lifted away from cutter to show construction.

TEST NO. 4. A slotting cutter with sharp-cornered teeth 1″ wide, $6\frac{5}{16}$″ diameter, rake 15°, 16 teeth, arbor 1½″. Alternate teeth slope in opposite directions with the axis of the cutter. Cutter speed 510 r. p. m., peripheral speed 835 feet per minute, feed 30½″ per minute. Cuts were taken at a depth of $\frac{3}{16}$″ and ¼″. The finish was a good commercial finish in each case.

TEST NO. 5. High-feed test, gashing with a gear cutter. Cutter 7 diametral pitch with extra hub, 12 teeth, 3½″ diameter, 10° rake, arbor 1¼″ diameter. Cutter speed 218 r. p. m., peripheral speed 200 feet per minute, feed 112″ (9⅓ feet) per minute. Material of the same composition as for the blocks in the preceding test, in the form of a cylinder 18¼″ long and of a diameter representing a 30-tooth, 7-pitch gear. The machine upon which this test was made was a 28″ Cincinnati Semi-automatic Miller. Repeated cuts were taken without any signs of distress of machine or cutter.

TEST NO. 6. A feature of all the preceding tests was a copious supply of lubricant to carry off all the heat. In each case as soon as the cut was finished, cutter and work were felt and neither showed an appreciable rise in temperature.

To show the effect of cutting dry the block and cutter of Test No. 1 were replaced and a cut started with a depth of ¼", feed at 20" per minute, and a cutter speed of 87 r. p. m., peripheral speed

Fig. 115. 3½" Diameter Mill

Cut speed 77 r. p. m. Cut ⅛" deep per 5" wide. Feed 17 $\frac{5}{16}$" per minute. 65,000 lbs. tensile strength steel.

Fig. 116. Helical Cutter

3½" diameter, 6" wide, feed 16" per minute. Material, 65,000 lbs. tensile strength steel; speed, 72 r. p. m.

80 feet per minute. This cut was started dry and the cutter showed distress after running about 2½"; it was stopped, and the edges of the teeth were found to be blued.

As a comment on the length of life of some of the cutters working under these conditions, a record is given of a cutter of the same description as the one used in Test No. 5, run to destruction. It milled 6,700", not including the cutter approach. This is equivalent to completely cutting 223 gears, 1" face, 7 pitch, 30 teeth. The cutter began to show distress at about the fourth cut from the last, and from this point to destruction the breakdown was rapid. Discounting these last three or four cuts, the cutter milled the equivalent of 220 gears of the dimensions specified.

STREAM LUBRICATION. The copious use or deluging of cutter and work with a lubricant or coolant has been mentioned. This is arranged for on Knee and Column Type Machines, as shown in Figs. 111 and 113. Around the miller table is placed a light steel frame to confine the liquid. In the base is set a centrifugal pump capable of delivering 12 gallons per minute. This is some 10 times the quantity delivered by the geared pumps ordinarily used. The reservoir capacity is large, and in this the pump is submerged so

Fig. 117

Material 65,000-lb. machinery steel, 7 pitch gashing cutter, 12 teeth. Cut full depth of tooth. Speed 218 r. p. m. Cutter 3½" diameter. Feed 112" per minute.

Fig. 118. Semiautomatic Miller

Machinery steel cutter standard slotting type with sharp corners. 5" diameter, 325' cutting speed. Feed 112" per minute.

that there is no suction piping or necessity for priming. The large capacity provides enough fluid so that an appreciable accumulation of heat is avoided. In addition, the surface of the table over which the lubricant spreads in a wide sheet acts as a means of cooling. The pump discharge under considerable pressure passes through a flexible hose to the cutter, or cutter hood, having in the line a large, quick-acting gate valve. From the table a large flexible steel tube returns the lubricant to the machine base.

The preferable means of distributing the lubricant to the cutter is by means of a special cutter hood. This is shown in Figs. 113, 114, 117 and 118. It completely surrounds the cutter.

The advantages of the hood are principally three. It confines the large flow of lubricant directly to the cutter and work, thus securing an inverted bath or flowing stream and making all of the

lubricant do its share in cooling. It washes the chips from the teeth of the cutter so that they can not be carried back into the cut, thus clogging it, dulling the cutter and marring the finished surface. It prevents the splashing of lubricant when used in large quantity. Incidentally, it is also a milling cutter guard, guarding against accidental injury to the operator.

EFFECTS OF STREAM LUBRICATION AND HIGH SPEEDS. It is instructive to consider in brief fashion the possible effect of these high speeds and lubrication upon the various limiting factors that enter into milling machine practice.

Power of machine: Increased speed in milling means a slightly increased power consumption per cubic inch of metal removed. Tests made by the Cincinnati Milling Machine Company indicate that an increase of 100 percent in speed means an increase of about 10 percent in power consumption per cubic inch of metal removed. Thus increased speed means more powerful machines.

Ability of the cutter to remove metal: The ability of a cutter to cut is increased with an increase of speed, the feed per minute remaining unchanged, for the reason that the chip taken by each tooth is decreased. This means a decrease of strain, wear and heating effect. The total or final heating effect is increased, but this can be counteracted by copious lubrication.

Size of arbor and its spring: The size of the arbor is one of the limitations in present milling practice, being governed by the sizes of commercial cutters. The feed per minute is a measure of the strain on the arbor; thus an increase of speed, giving a lessened pressure per tooth, reduces the arbor strain and tends to do away with the limitation of arbor size. To illustrate, if a given set of conditions permit of a feed of 2″ per minute, then by maintaining this rate per revolution, but multiplying the revolutions per minute by 10, we get a permissible feed of 20″ per minute with the same arbor stress.

Heating of the cutter: The heating of the cutter is often THE limitation. This can be removed by using a quantity of lubricant or coolant sufficient to remove the heat as soon as it is released and keep cutter and work cool.

Wear of the cutter: The wear of a milling cutter is dependent upon the number of linear inches milled if the depth of cut and feed per revolution are kept constant. Thus, increase of speed increases wear per unit of time. When the speed is sufficiently high so that by the aid of copious lubrication the chips are completely washed

away, wear is somewhat reduced by avoiding the grinding action due to the cutting up of chips.

Breakage of cutters: Frail cutters are a limitation in milling practice, because only a certain maximum feed per revolution can be taken, dependent upon their strength. If this feed is kept constant, production is increased directly as the speed is increased, without increasing the cutter strain or danger of breaking.

Fig. 119. Milling Clutch Teeth

Using a 27-tooth cutter, 3" diameter. Speed 191 r. p. m. Feed 112" per minute.

Fig. 120. Manganese Steel Rail

Cut ¼" wide, 1⅝" deep. Feed 3¼" per minute.

Heating of work: Uneven local heating when milling produces surfaces that are not flat because swelled portions are cut away. This is a progressive action as the cut advances, for the total heating increases. Further, some work springs after removal from the fixture, due to its temperature when removed. The absence of heating will do away with this limitation.

Spring of the work: A weakness and frailty of the work is another limitation, which is minimized for the same reasons brought out under "Breakage of cutters" above.

Spring of the fixture: The analysis given for "Breakage of cutters" applies here. In many cases we might get greater production if the time for putting work into and removing it from fixtures could

be reduced. However, the frailty of fixture or work prevents the use of quick-acting clamping devices, as eccentrics, cams, levers and the like. Thus, if the pressure per tooth in cutting is reduced, the pressure required for holding may be reduced, and clamping devices may be made to operate more quickly. Thus the influence of speed in this respect should be to increase production.

Spring in the machine: The arguments presented under "Spring in the fixture" apply here.

Distance of revolution marks on the work: It is claimed that output today is controlled in perhaps 90 percent of cases by the distance between revolution marks. Polishing or some following operation limits this distance. These marks must be near together, or the following operation can not be properly performed. An increase of speed with unchanged feed, bringing these marks closer together, is one obvious remedy.

Smoothness of cut: One feature in high-speed milling is the throwing away of the chips, which resembles nothing so much as the throwing off of shavings and chips in planing wood. This complete removal of the chips, both by the effects of speed and copious flooding with lubricant, does away with the grinding effect on the finished surface. Thus, with a fixed distance between revolution marks, high speed tends to give a smoother surface. It is possible that the flywheel effect of the rapidly rotating parts connected to the arbor influences this action.

Cleaning fixtures and work: The washing effect of the lubricant on the work and fixture, when the lubricant is used in great quantity and under considerable pressure, may aid in increasing production.

CHIPS FROM HIGH-SPEED MILLING. The illustrations, Figs. 121, 122, 123, show chips from high-speed milling, and the notes below indicate the conditions under which each was produced.

Fig. 121. (A) From machinery steel, cutter spiral mill 3½″ diameter by 6″ long, 1½″ arbor. Cut 5″ wide, ⅛″ deep, cutter speed 500 r. p. m., feed 30½″ per minute. Stream lubricated.

(B) Conditions as for A except depth of cut $\frac{1}{16}$″.

(C) From machinery steel, cutter helical mill 3½″ diameter, 6″ long, 3 teeth, 1½″ arbor, cut 5″ wide, $\frac{1}{16}$″ deep. Cutter speed 500 r. p. m., feed 30½″ per minute, stream lubricated.

(D) Conditions as for C except depth of cut ⅛″.

Fig. 122. (E) Conditions as for C except depth of cut $\frac{5}{16}$″, cutter speed 86 r. p. m., feed 20″ per minute.

(F) From machinery steel, keyway cutter, $6\frac{5}{16}$" diameter, 1" face, $1\frac{1}{2}$" arbor, cut a slot 1" wide, $\frac{3}{16}$" deep. Cutter speed 500 r. p. m., feed $30\frac{1}{2}$" per minute. Stream lubricated.

(G) Conditions as for F, except depth of cut $\frac{1}{4}$".

Fig. 123. (H) From machinery steel, 7-pitch spur gear cutter, 4" diameter, cutting full depth. Cutter speed 220 r. p. m., feed 112 per minute. Stream lubricated.

(I) Conditions as for A except depth of cut $\frac{5}{16}$", cutter speed 86 r. p. m., feed 20" per minute. Stream lubricated. The removal of metal was at the rate of 31 cubic inches per minute.

(J) Conditions as for I except that the cut was made dry. It ran for only about $2\frac{1}{2}$" when the cutter showed signs of distress. These chips were colored dark blues and purples in contrast to all of the other chips, which were bright and without any discolorations.

The differences of all these chips from ordinary chips are evident. One feature of these chips is that when they are produced

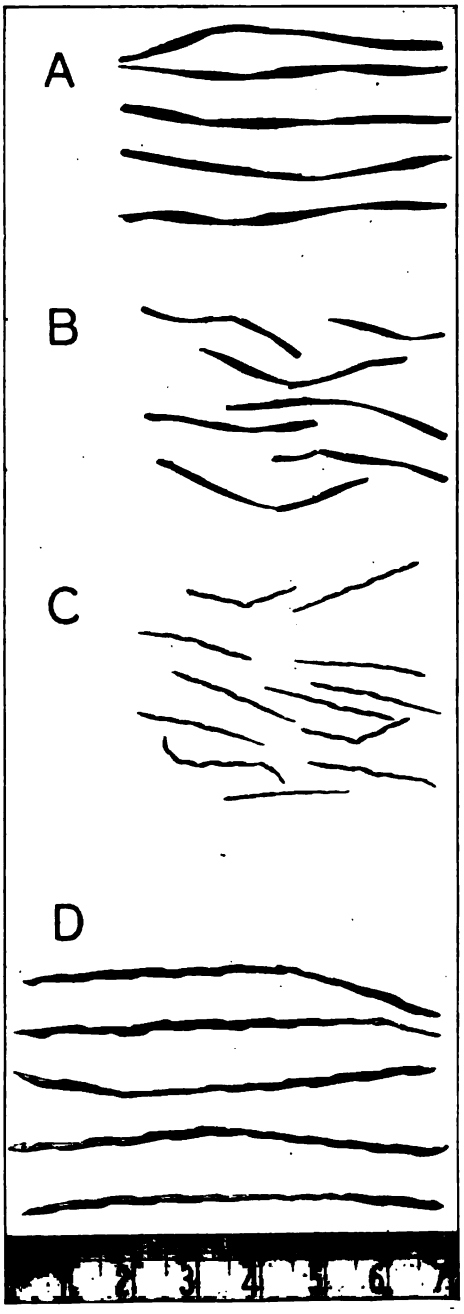

Fig. 121

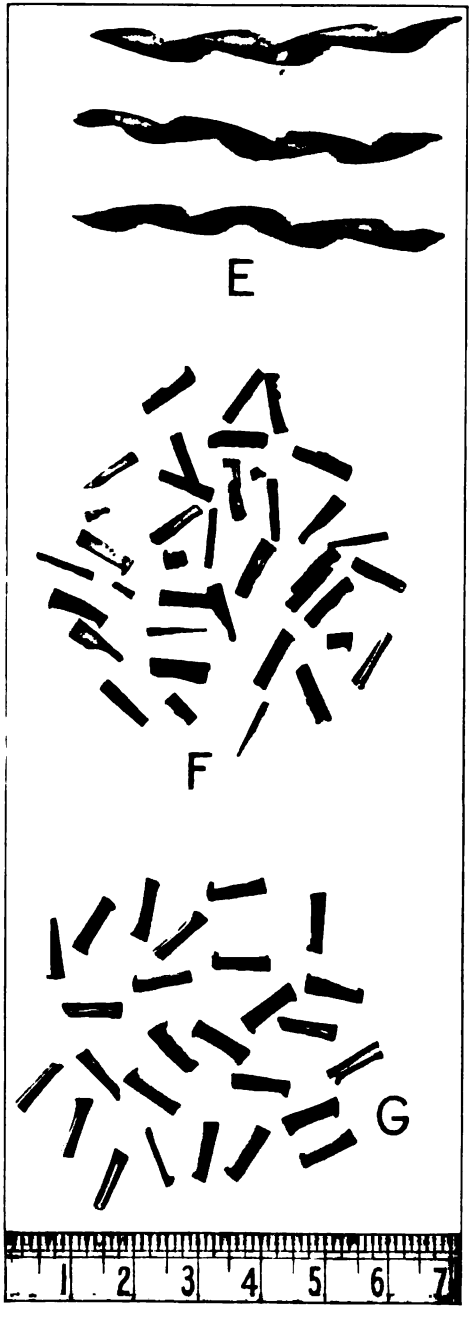

Fig. 122

with sufficient lubricant they are entirely devoid of color. Here is one of the radical differences between high-speed milling and high-speed turning. In the original article in the AMERICAN MACHINIST, describing the announcement of high-speed steel, occurs this sentence:

'The chips themselves left the tools at a temperature which drew them to beautiful blues and purples; this coloring of the chips is a practical shop test of the correct speed of the work.'

In contrast, the absence of color in high-speed milling chips is a practical shop test of the practicability of the feed and speed in use.

KINDS OF LUBRICANT. These tests seem to show that the nature of the lubricant does not affect the cutting speed provided the quantity is sufficient. That is, the principal action is one of cooling, and with even the cheapest cutting compounds there is sufficient lubricating effect, provided the quantity used is great enough to produce the necessary cooling."

THE PUMP. The pump is of the centrifugal type and is capable of delivering

from 12 to 15 gallons of lubricant per minute. This is many times the quantity delivered by the geared pumps used on milling machines at the time these experiments were conducted. This pump is located in a large reservoir in the base of the machine, and is completely submerged, therefore needing no suction pipe or priming. This large reservoir is necessary so as to provide a large enough body of lubricant to prevent it from accumulating an appreciable amount of heat. In addition, the lubricant spreads itself in a wide sheet over the table of the Milling Machine, and is thus aircooled before it returns to the reservoir.

The supply is carried through a line of ¾" piping to a large quick-acting gate valve, by which the volume is regulated, thence through a flexible hose and down pipe to the cutter hood. This down pipe is clamped to the overarm and may be firmly secured in any desired position.

THE CUTTER HOOD. This cutter hood (patented) is attached to the

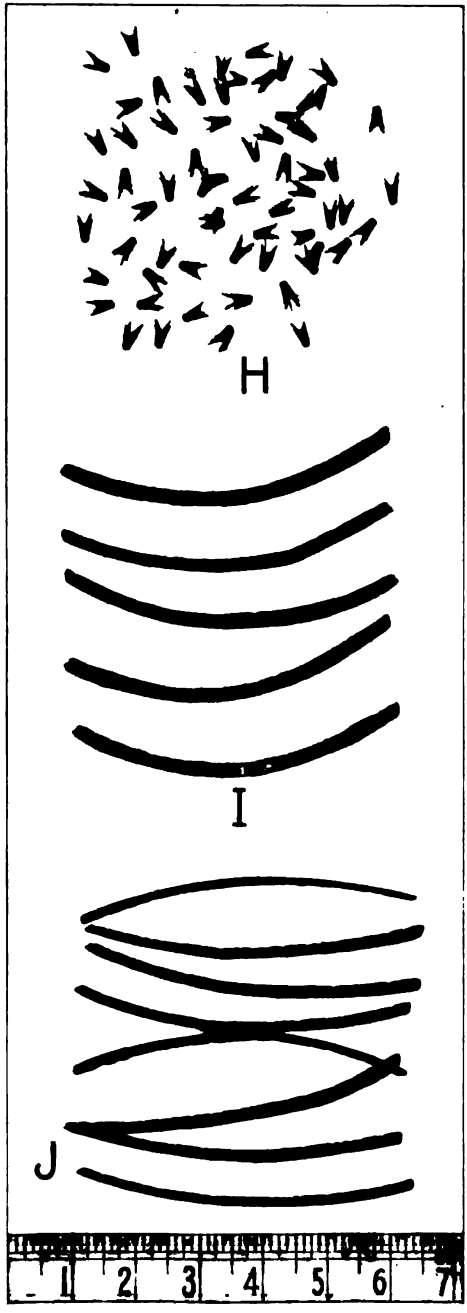

Fig. 123

delivery pipe and partly encloses the cutter. The functions of the hood are:

1. To confine the large flow of lubricant directly to the cutter and work, thus securing an inverted bath, and making all the lubricant take part in the cooling of the cutter.
2. To wash the chips from the teeth so that they can not be carried back into the cut, causing the cut to become clogged and the cutter to be dulled.
3. To prevent splashing of lubricant.

A drain table (patented) consisting of a light steel frame is provided to confine the lubricant to the table. This drain table is provided with a strainer of large area, and is so designed that a tight fit to the table is not required.

A flexible metal return tube of ample capacity is provided to return the lubricant to the reservoir.

This cutter and work-cooling system can be applied to all sizes of Cincinnati Constant Speed Drive High-Power Millers, Plain and Vertical (but not Universal). It should be attached in our factory before the machine is shipped.

The STANDARD EQUIPMENT includes:

1 centrifugal pump
1 set of ¾″ piping, gate valves, flexible hose, etc.
1 standard hood
1 drain table
1 flexible return tube

The standard hoods furnished as part of the equipment are as follows:

No. 2 Plain and No. 3 Standard Machines: Hood for spiral mill 3″ diameter, 3″ face, 1¼″ hole.

No. 3 Plain and No. 4 Standard Machines: Hood for spiral mill 3½″ diameter, 4″ face, 1½″ hole.

No. 4 and No. 5 Plain Machines: Hood for spiral mill 4″ diameter, 6″ face, 2″ hole.

For Vertical Machines and Automatic Milling Machines the hoods must be made up special to suit the cutters and work and can only be furnished when we have definite information. Sometimes work is of such a nature that the hood can not be used with a face or end mill.

The practical value of being able to use faster speeds, with the resulting faster table travels, is clear. On a number of regular

milling operations in our manufacturing department, the increase in feed, because of the faster speeds with stream lubrication, averages 125% faster than the best previous practice.

Light Cuts with Stream Lubrication. The very large majority of all milling work allows only relatively light cuts. This is either because the cutter is of delicate construction or the arbor is small; or the piece itself is frail or of such a shape that it is not feasible to hold it rigidly in a fixture, or because heavy feeds would heat or spring the work too much; and finally, because the revolution marks may have to be close together in order to get a presentable finish.

Running the cutter at very high speeds makes it possible to take light cuts at a high rate of feed per minute with the following advantages:

The pressure on the work is light.

The work does not spring.

The spring in the arbor is reduced allowing the use of smaller arbors and smaller cutters.

Lighter fixtures can be used.

Irregular pieces can be held in fixtures with less danger of being pulled out.

The pressure between cutter and work being slight, there is not the danger of springing the arbor and consequently the finish is better, and the piece is finished to closer accuracy as to size.

There is no heating of the piece, and in many instances it is possible to finish a piece with one cut, where heretofore two cuts were required.

Heavy Cuts with Stream Lubrication. Not only is this large flow of lubricant very beneficial on light cuts, but it also makes it possible to take the heavier cuts at very much higher cutting speeds, thereby permitting a smaller cut per tooth, thus reducing the strains on work and arbor. The volume of lubricant also carries away most of the chips, thus reducing the necessary cleaning of the jig to a minimum.

CHAPTER IX

MILLING CUTTERS

In Chapter V, milling cutters and the fundamental principles of their action were discussed, but without going into the details of cutter construction. In this chapter we will discuss the design of cutters in detail. We will first consider the simple case of ordinary milling cutters.

An ordinary milling cutter is a cylindrical body of steel with a hole through the center and with teeth running parallel or at some angle with the axis. If the teeth are parallel with the axis, the cutter is called a plain mill, and if they are at an angle, the cutter is called a spiral mill.

When cutters are of relatively small size, they are made of a solid piece of steel. When of sufficiently large size, the body and teeth are separate and the cutters are then called inserted tooth mills.

Solid Mills. The most important things about the body of the mill are the material of which it is made, and the thickness of the metal between the keyway and the bottom of the teeth. The metal is either carbon tool steel or high-speed steel. Carbon steel cutters are used less and less nowadays, but stream lubrication, discussed in the preceding chapter, makes it possible to use them to better advantage than before. Carbon steel cutters are often used for finishing operations on extremely exacting work, while high-speed steel cutters are used for roughing. Carbon steel acquires a finer edge than high-speed steel. This latter material is more or less brittle and the edges of a high-speed steel cutter under the magnifying glass sometimes show small serrations, which affect the quality of the finished surface when an extremely fine surface is to be produced.

The end surfaces of the body of the cutter should be as nearly flat, parallel and at right angles to the axis of the bore as it is possible to make them. The result of defective ends of the cutter is that the arbor will be sprung when arbor collars and cutters are clamped

together by the nut at the end of the arbor; the cutter will not run true, and the effect is the same as if one tooth were considerably higher than the others. This one tooth, therefore, does much more

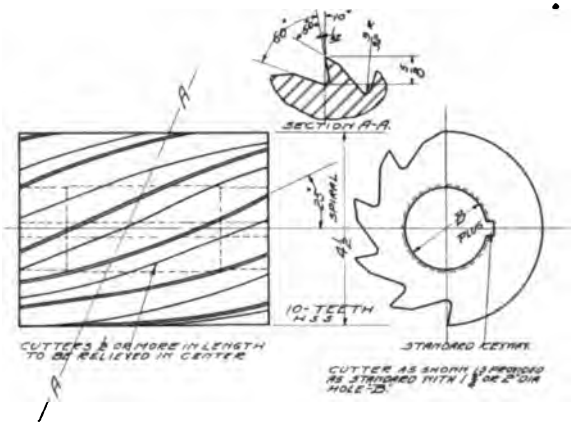

Fig. 124

A modern spiral mill with wide spaced undercut teeth.

work than the others and dulls before the other teeth are affected. In other words, the cutter must be resharpened much sooner than if all the teeth were doing their share of the work.

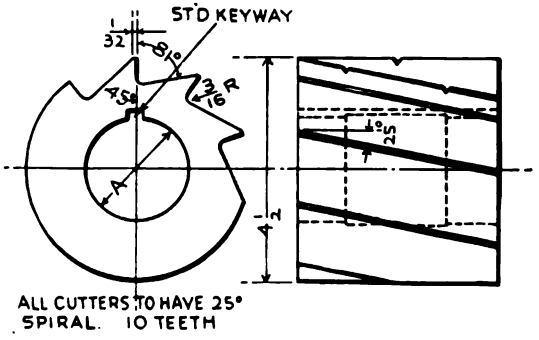

Fig. 125

One of the earlier spiral mills with nicked teeth, having radial faces. This style of cutter has been superseded by the one shown in Fig. 124.

The bore of the cutter should be true to size and perfectly round. As a rule, the bore is partly relieved as is shown in Fig. 124. This relief is not provided when the cutter is short.

When milling cutters were first invented they were made with a very large number of teeth. The cutter was merely a rotating file, but as such, was a great improvement over a hand-operated file. Gradually the number of teeth was diminished, but it was soon found that if the teeth were relatively far apart, each tooth would have to take a fairly heavy chip. At that time cutters were either not ground at all, or ground by hand, and, of course, this made it impossible to have the teeth on an approximately uniform diameter. Under these conditions some teeth would not cut at all and others would have to take twice or three times their legitimate share of the work, or maybe more. Not until cutter grinding machines were regularly used for sharpening cutters, was it possible to use the milling cutter for reasonably heavy work.

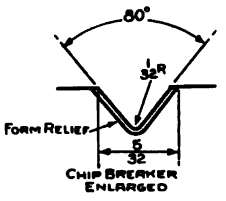

Fig. 126

Faults of Cutters with Too Many Teeth. Until quite recently, teeth of plain mills and spiral mills were spaced about $\frac{3}{8}$" apart, and even now cutters may be found in use on which the teeth are even closer together. These teeth were made with Radial Faces as in Fig. 125, so that their action was as shown in Fig. 90. The tooth was forced into the metal, causing spring in the arbor, or in the work. Imagine a cutter cutting steel at a speed of 70 feet per minute with teeth spaced $\frac{3}{8}$" apart, then 2,240 teeth will work every minute, and if we further imagine that the feed is 2" per minute, then each tooth takes a chip of which the greatest thickness is $\frac{1}{1120}$ of an inch, or less than one thousandth of an inch. It will be readily seen that this chip is so thin that, as a rule, the tooth will refuse to bite into the metal, thus leaving a chip of double thickness for the next tooth. This tooth is perfectly capable of taking this double chip, but it is compelled to do this extra work because of spring in the arbor. In other words, something which is wrong must happen first before the cutter will cut at all.

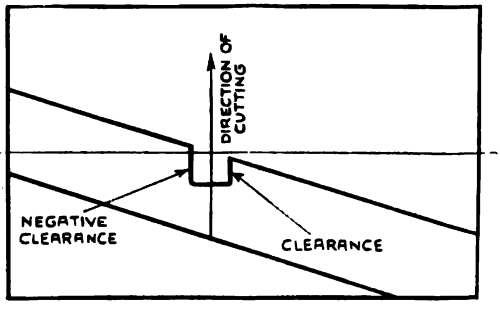

Fig. 127

Correct Design of Spiral Mills. A few years ago The Cincinnati Milling Machine Company carried through a series of experiments as to the best spacing of the teeth of milling cutters. It was found that a much wider spacing than was then customary would give very much better results, and from these experiments a set of dimensions for various styles of cutters was developed. Fig. 124 shows our latest design of Spiral Mill, 4½″ in diameter. This mill has 10 teeth corresponding to a spacing of about 1.4″. At first we followed usual practice with an angle of spiral of about 10° or 12°, but this was soon increased until now this angle is made 25°, unless there should be end teeth, as in end mills, when the angle is kept down to 20°. The faces of the teeth are not made radial, but are undercut; in other words, THEY HAVE RAKE. The amount of this rake should be about 15° for steel, and this is the way the cutter should be made if used for steel only, but as a standard cutter may be used for either steel or cast iron, this rake angle is kept down to 10°. Due to this undercut the section of the tooth would be materially weakened, and for this reason the back of the tooth is milled with a double angle as clearly shown in the illustration. This actually gives a stronger tooth than on the older mills made without rake. The bottom of the tooth is made with a large fillet, for two reasons: In the first place, this fillet strengthens the tooth, and in the second place, it prevents chips from lodging between the teeth.

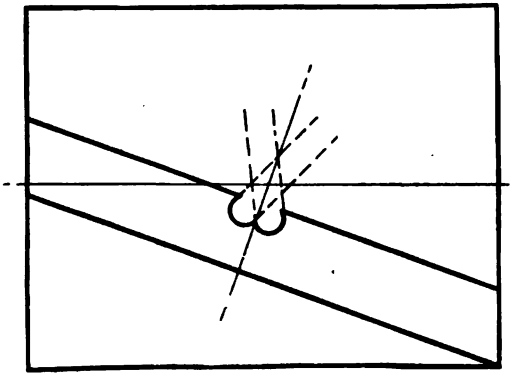

Fig. 126

It was found quite early in the investigation of milling cutters that a long cutter, that is, one with wide face, would cause considerable spring and chatter, and that this condition might be partly remedied by making nicks in the teeth, Fig. 125, thus cutting down the length of the chip. These nicks, or chipbreakers, have long been a regular feature of milling cutters. However, it was also found that a milling cutter with chipbreakers would not produce as fine a finish as one without them, so that quite often an additional

cutter without chipbreakers had to be used for finishing. An analysis of this condition showed that this rough finish was due to the fact that one side of the chipbreaker had negative clearance. Fig. 127 will show this clearly. This side of the chipbreaker, therefore, could not cut, but was dragged over the metal, and this produced a torn finish, and besides, this point of the chipbreaker became the weak point of the cutter; in other words, it was the starting point for the breaking down of the cutter when at work. To overcome this, chipbreakers were made as shown in Fig. 128. They were produced by milling two notches crossing each other at the front edge of the tooth. The same result was obtained later on by constructing the chipbreaker as shown in Fig. 126. These chipbreakers were necessary when the angle of spiral was 10° or 12° and were kept until this angle was gradually increased to 25°. The chipbreakers with clearance on both sides do not produce the torn finish caused by the ordinary kind of chipbreakers, so that the same style of cutter can be used for roughing and finishing cuts. However, the corner of the chipbreaker still remains the weak point of the cutter and begins to dull first. It was also found that the edge of the tooth following dulled faster immediately behind each chipbreaker than the other parts of the cutting edge. All this goes to show the desirability of doing away with chipbreakers.

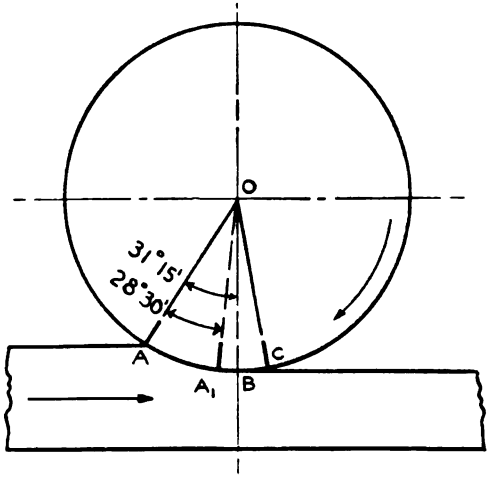

Fig. 129

Twenty-Five Degree Angle Spiral Mills. The angle of 25° is a great improvement over the old angle, for, with this angle no chipbreakers are needed, as will be clear from what follows. There is another reason why this angle of 25° is preferred. The wide spacing of the teeth allows one tooth of a 12° spiral mill to get entirely out of action before another tooth enters, and this causes more or less hammering. If the cut is deep, then this hammering is not noticeable, because one tooth is still in the cut when the next one

enters, but when the cut is shallow the hammering becomes quite pronounced. The angle of 25° does away with these conditions. Unless the cut is very shallow indeed, there will always be two teeth in action. Besides, with the 10° or 12° angle, the cutting action is not so free, and therefore the difference between chip and no chip means a great deal of difference in pressure exerted against the work and therefore a great deal of difference in the spring of the arbor. With the angle of 25° the length of the tooth embedded in the work is never very great, and therefore the spring in the arbor is very much less and consequently the hammering is very much reduced. To illustrate this with figures, we shall assume a piece of work 4″ wide and a cutter of 3½″ in diameter, with nine teeth.

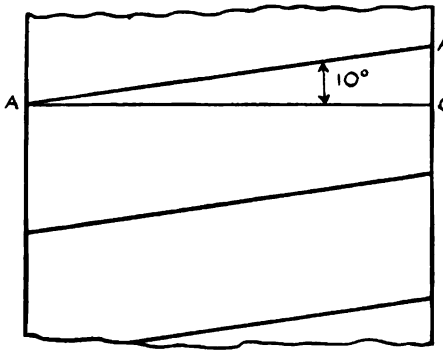

Fig. 130

We shall further assume that the depth of cut is ¼″ and that the angle of the spiral is 10° (see Fig. 129). The curve AB represents the path of the cutter in the work. Under the conditions given above, the angle AOB is 31° 15 minutes. The angle between two adjoining teeth, AOC, is 40°, because there are 9 teeth in the cutter, so that when a certain point of the tooth OA is just ready to leave the work, a corresponding point of the next tooth OC has not yet entered. It may be, however, that another point of OA still is in the work; in fact, this must be so, because the tooth is not parallel with the axis, but is cut with a spiral. This will be clear from Fig. 130, which shows a development of this cutter. Imagine a piece of paper wrapped around the cutter, the edges of the teeth having been painted with red lead and the piece of paper then taken off the cutter and laid out flat. All the teeth will show on the paper as red lines. A_1 represents one of these lines. The angle which this line A_1 makes with a line AC at right angles with the edge of the paper is 10°. The length of this line AC is 4″, this being the width of the work. Of course it may be that the cutter is longer than 4″, but we are only contemplating that portion of the cutter which is engaged with the work. From the dimensions of AC and the angle 10°, we find that A_1C is .70532″. In Fig. 129, A is just ready

to leave the work, but the other extreme point of this tooth A_1 has still $^7/_{10}$" to travel before it is in the same relative position. A simple calculation will show that the angle AOA_1 is 28° 30 minutes and, therefore, that the angle A_1OC is 11° 30 minutes. We have found that any point of the cutter travels through the work through an angle of 31° 15 minutes, which is more than 11° 30 minutes, so that the point A_1 of the tooth OA is still in the work when the point C of the tooth OC enters. However, we see also that it is in the work for only a short time longer and, consequently, if the depth of cut were less than ¼" the tooth OA would be completely out of the work before the tooth OC would enter. If, now, we should make the spiral angle 25° instead of 10°, we would have the same general conditions, but the actual figures would be changed. The angle AOB, Fig. 129, would still be 31° 15 minutes, but the line A_1C, Fig. 130, would now be 1.86524" instead of .70532," and the angle AOA_1 would now be 32° 15 minutes, so that the angle A_1OC would be only 7° 45 minutes. In other words, the tooth OC would be in action long before the tooth OA would leave the work and, consequently, the depth of cut might be very much less than ¼" and yet there would be always at least one tooth in the cut. It will, of course, also be clear that the part of the tooth which first enters the work will be entirely clear again before the farther end of the same tooth enters, even in a cut ¼" deep. In a shallower cut the section of tooth in engagement at one time will, of course, be less. This fact together with the free cutting action due to the shearing effect of the wide angle combine to produce a smoother action and the removal of more metal per horsepower than is possible with the older cutters.

Results of Tests on Milling Cutters. The results of experiments on milling cutters referred to in the previous paragraph are summarized in the several test records printed below. Space does not permit of giving all the details here, but the data given will indicate quite clearly the great advantages possessed by cutters of the Cincinnati design.

Three series of tests will be considered here, as follows:

a. To show the influence of wide-spaced teeth.
b. To show the influence of rake or undercut teeth.
c. Tests on cutting capacity of face milling cutters.

All of these cutting tests were made in a machinery steel bar having 55,000 pounds tensile strength, containing .20 carbon and .50 manganese. Because of the great variation in the cutting qualities

of different pieces of cast iron, it is difficult to formulate exact data, and the results published herein will therefore be confined to milling tests on uniform steel bars as above.

Influence of Wide-Spaced Teeth. The tests given in table A were made with three spiral mills, all of which were 3″ in diameter, with a 1¼″ hole, 25° angle spiral, teeth ground with 5° clearance, but with the faces of the teeth radial, that is, no undercut or rake. The cutters differed only in the spacing of the teeth. Cutter A had 22 teeth, spacing about .43″. Cutter B had 16 teeth, spacing about .59″. Cutter C had 10 teeth, spacing about .94″. The cuts were taken in a machinery steel bar 2¾″ wide, and the cuts were exactly the same depth in each case.

Table A—Showing Influence of Wide Spaced Teeth

Cutter	A—22 Teeth			B—16 Teeth			C—10 Teeth		
Width of cut	2¾	2¾	2¾	2¾	2¾	2¾	2¾	2¾	2¾
Depth of cut	1/16	1/16	1/16	1/16	1/16	1/16	1/16	1/16	1/16
Revolutions	80.4	80	80	82	68	67	69	68	68
Actual feed in inches per minute.	11.70	14.8	18.46	11.9	15.11	18.64	11.9	15.11	18.77
Cubic inches of metal removed per minute	5.94	7.63	9.52	6.14	7.79	9.62	6.14	7.79	9.68
Amperes	60	70	74	54	56	64	46	52	60
Volts	200	200	198	196	198	198	195	197	196
Actual h. p. at machine corrected for motor efficiency	13.44	15.75	16.5	11.77	12.32	14.28	9 84	11.39	13.24
Cubic inches of metal removed by 1 h. p. in one minute	.442	.484	.577	.522	.631	.674	.625	.684	.731

The above figures show very conclusively the advantage of wide spacing alone. Cutter B, for instance, removed an average of 21% more metal than cutter A, and cutter C removed an average of 36% more metal than cutter A.

Influence of Rake or Undercut Teeth. Tables B, C and D show the results of cutting tests made on a steel bar 5″ wide, with cutters 3½″ diameter, 6″ face, used on an arbor 1¼″ diameter. Cutter A, Cincinnati Design Spiral Mill as in Fig. 124, 25° spiral angle, 10 teeth, 1.11″ spacing, with 10° undercut or rake. This is shown in operation in Fig. 131.

Cutter B, a Cincinnati Design Cutter similar to the above, but with radial tooth faces, that is, without rake. This is shown in operation in Fig. 132.

Cutter C, a Helical Mill as shown in Fig. 151. This is shown in operation in Fig. 133.

All of these tests were made on a No. 5 Plain High-Power Cincinnati Miller, direct connected to a 35 h. p. motor and fitted with our stream lubrication system. The feeds and speeds as given in the tables are corrected for loss of speed in the motor and the horsepower delivered to the machine is corrected for motor efficiency.

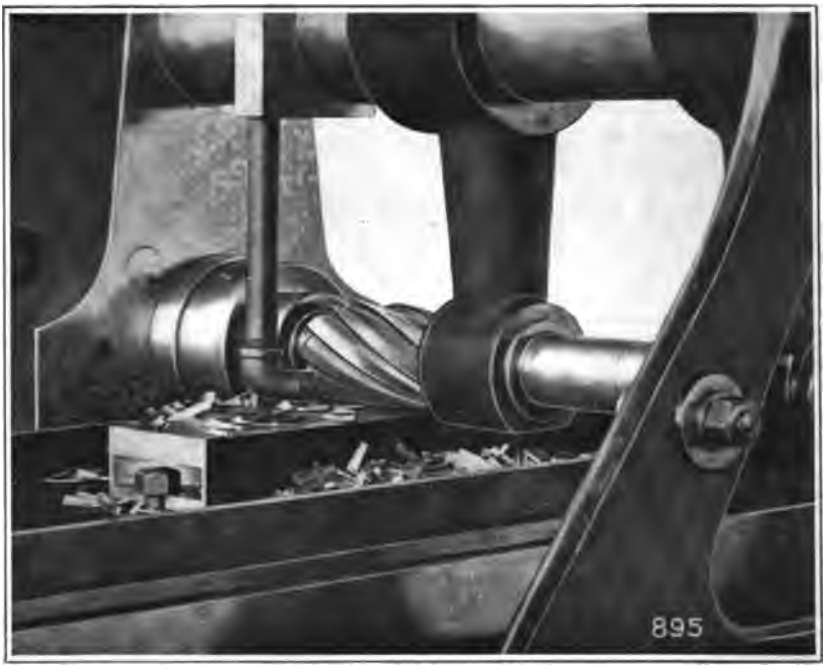

Fig. 131. Cutter A

Spiral mill 3½" diameter. 25° spiral. 10 teeth. 10° rake.

Table B—Showing the Influence of Rake

Cuts $\frac{1}{16}$" deep. Machine set for 16" feed per minute.

Cutter	A—25° Spiral 10 Teeth 10° Rake	B—25° Spiral 10 Teeth No Rake	E—Helical Mill
Width of cut	5	5	5
Depth of cut	$\frac{1}{16}$	$\frac{1}{16}$	$\frac{1}{16}$
Revolutions	65	65.5	67.7
Feed in inches per minute (actual)	14.4	14.56	15.04
Cubic inches of metal removed per minute.	13.5	13.65	14.10
Amperes	56	86	68
Volts	202	195	198
Total h. p. at machine corrected for motor efficiency	12.58	18.88	14.20
Cubic inches of metal removed by 1 h. p. at machine in one minute	1.074	.724	.99

Table B shows cuts that were taken $\frac{3}{16}''$ deep with the machine set at 16″ feed per minute. The data obtained from the cuts with the helical mill are included in these tables as a matter of interest only. We are chiefly concerned with the relative value of cutter A with rake, and cutter B, which is similar to it, but has radial teeth. The figures show that the cutter with rake removed approximately 48% more metal per horsepower minute than the cutter without rake.

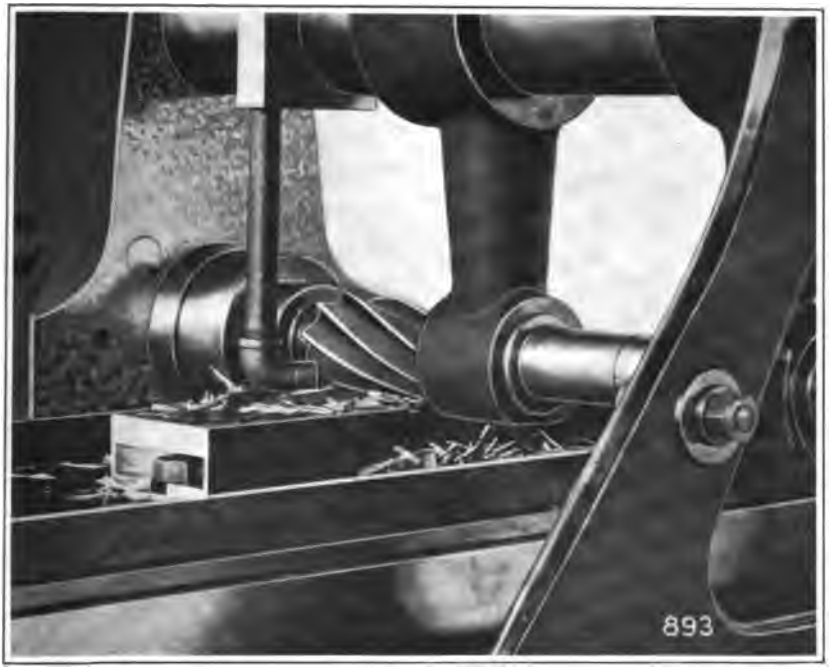

Fig. 132. Cutter B
Spiral mill 3½″ diameter. 25° spiral. 10 teeth. No rake.

Table C—Showing the Influence of Rake
Cuts ⅛″ deep. Machine set for 16″ feed per minute.

Cutter	A—25° Spiral 10 Teeth 10° Rake	B—25° Spiral 10 Teeth No Rake	E—Helical Mill
Width of cut	5	5	5
Depth of cut	⅛	¼	⅛
Revolutions	65	57.6	62
Feed in inches per minute (actual)	14.4	12.8	13.76
Cubic inches of metal removed per minute	27	24	25.8
Amperes	108	172	132
Volts	196	182	190
Total h. p. at machine corrected for motor efficiency	23.54	23.60	27.57
Cubic inches of metal removed by 1 h. p. at machine in one minute	1.15	.715	.935

Table C shows similar tests but with cuts $\frac{3}{8}$" deep. Here it will be seen that the cutter with rake removed more metal per horsepower minute than in the previous case when taking a $\frac{3}{16}$" cut. However, the cutter without rake did not do so well on the deeper cut. In fact, in this case, the cutter with rake removed approximately 60% more metal than the one without rake.

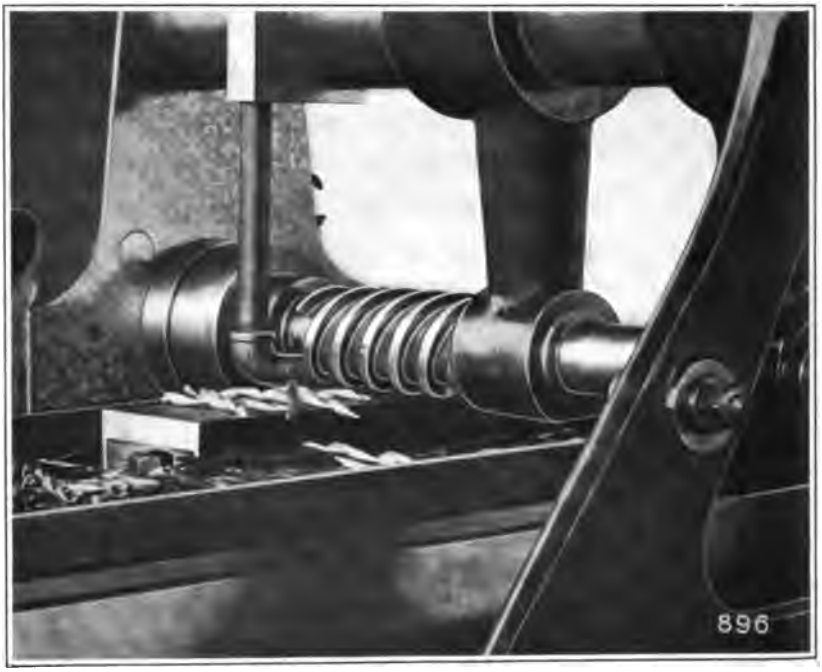

Fig. 133. Cutter C
Helical mill 3½" diameter. 66° helix angle. 3 teeth. 15° rake.

Table D—Showing Influence of Rake

Cuts $\frac{1}{8}$" deep. Machine set for 20" feed per minute.

Cutter	A—25° Spiral 10 Teeth 10° Rake	B—25° Spiral 10 Teeth No Rake	F—Helical Mill
Width of cut	5	5	5
Depth of cut	$\frac{1}{8}$	$\frac{1}{8}$	$\frac{1}{8}$
Revolutions	62.6	65	89.6
Feed in inches per minute (actual)	17.40	11.25*	16.6
Cubic inches of metal removed per minute	32.62	21.09	31.12
Amperes	140	126	160
Volts	192	193	190
Total h. p. at machine corrected for motor efficiency	29.52	26.73	32.60
Cubic inches of metal removed by 1 h. p. at machine in one minute	1.10	.790	.955

*This cutter without rake could not take this cut with the feed set for 20" per minute.

Table D compares these same cutters again, but with the machine set for 20″ feed per minute. This comparison is not entirely fair, because the cutter with no rake could not be made to take the cut at this fast feed, and the figures given in this table therefore, compare the results obtained from the cutter with rake with the machine set at 20″ per minute and the cutter without rake with the machine set at 12½″ feed per minute.

The results of these tests are very illuminating, showing separately as they do, the great advantages; first, of wide-spaced teeth; second, the still greater advantage of rake. Of course it must be borne in mind that the ordinary form of nicked tooth high-speed steel spiral mill, which is considered standard and regularly carried in stock, could not successfully take some of the cuts shown in tables B, C and D.

Tests on Face Mills. The tests in table E were made with a 10″ High-Power Face Mill as shown in Fig. 139, and the coolant was applied with one of our standard oil pump equipments. In these tests proper corrections have been made on feed and speed to compensate for the loss of speed in the motor and the horsepower delivery to the machine is corrected for motor efficiency.

Table E—Cutting Tests on Face Mills

Depth of Cut	Actual Cutter Speed	Actual Feed Inches per Min.	Amperes	Actual H. P. at Machine	Metal Removed	
					Total Cu. In. per Min.	Cu. In. by 1 H. P. in 1 Min.
½″	15½	4.61	50	12.53	11.52	.919
½″	15½	4.61	51	12.83	11.52	.898
½″	15½	4.65	51	12.83	11.62	.907
½″	15	5.81	66	16.91	14.52	.86
½″	15	5.81	63	16.11	14.52	.903
½″	15	5.81	64	15.82	14.52	.918
⅜″	15½	7.56	52	13.10	14.17	1.082
⅜″	15¾	7.63	52	13.10	14.30	1.091
⅜″	15½	7.56	50	12.53	14.17	1.131
⅜″	15¾	7.66	50	12.53	14.37	1.148
⅜″	15¾	7.63	50	12.83	14.30	1.114
5/16″	16	7.70	44	10.90	12.02	1.103
5/16″	16	7.68	44	10.90	12.	1.101
5/16″	15¾	7.63	45	11.16	11.92	1.069

The above figures are comparative only in relation to the cubic inches removed per horsepower per minute with this mill at different depths of cut. They indicate that this mill showed its highest efficiency on cuts ⅜″ deep, and that there was a decided falling off of efficiency with cuts ½″ deep.

Relation of Depth and Width of Cut and Feed to Efficiency. This relative efficiency applies to this cut only. At some other width of cut and some other feed the relative efficiencies of cuts of different depths will show different results. It must be remembered that the efficiency of the cutter, that is, the metal it will remove with one horsepower in one minute, depends on three factors: width of cut, depth of cut, rate of feed. As proof of this we need only call attention to extreme cases:

1. An extremely wide cut. For instance, a cut in steel 10″ wide, $\frac{5}{32}$″ deep, will not prove efficient as compared with the above cut $\frac{5}{16}$″ x 5″ at the same rate of feed, although the cut has the same area of section.

2. An extremely deep cut. For instance, a saw $\frac{5}{32}$″ wide can not possibly take a cut 10″ deep, although this will again have the same area of section.

The above figures will prove very valuable when estimating the capacity of a Miller for a given piece of work, or when estimating production on a given piece of work to be done on any particular machine. While the above tests are confined to the use of spiral mills and face mills, they will indicate that similarly good results may be expected from end mills, side mills and other cutters when made in accordance with the Cincinnati design. (See Chapter IX, Power Required to Do Milling.)

Some examples of these different styles of mills are shown on the following pages and will serve as a guide for anyone desiring to make his own milling cutters. However, we recommend THAT CUTTERS ALWAYS BE BOUGHT from a reliable cutter maker. This is a special business and those who have made it a study and have a fully equipped plant and men experienced in this work can invariably furnish a better cutter than can be made in a shop that is not specially equipped for doing this work. Besides, when all the expense is figured in, the purchased cutter will be found to be cheaper. WE DO NOT MAKE CUTTERS OURSELVES, but will always gladly refer others to reliable concerns who make that their business.

End Mills with Shank. Fig. 134 shows End Mills with taper shanks. It will be noticed that on these the angle of the spiral is 20° instead of 25°. This is done because the spiral angle also becomes the rake angle of the end teeth. A 25° angle would be too great. At the same time it is desirable, for the reasons given above, to keep the spiral angle as wide as is practical. A compromise

angle of 20° has proven satisfactory. It will be noticed that these end mills also have their teeth undercut 10° and the faces of the end teeth are cut back of the radial line this same amount. With the older design these things would have been out of the question because the teeth would have become entirely too weak. The mills shown in the drawings have the backs of the teeth formed with double angles, giving them ample strength.

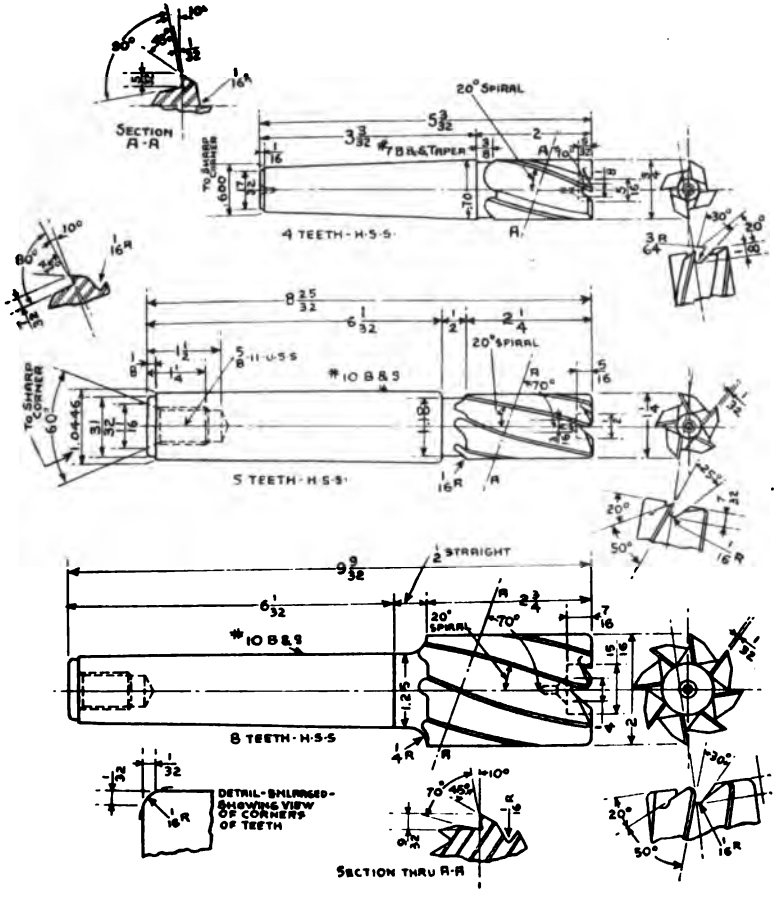

Fig. 134

It used to be the practice to continue the end teeth of an end mill down to the center, or at least as close to the center as it was possible to go. This served no purpose whatever. If the 2″ end mill shown in Fig. 134 takes a cut, say, ¼″ deep, with ⅛″ feed per

revolution, then each of the teeth will take a bite of $\frac{1}{64}$". It may seem that this is a very small cut for this size end mill, but at a speed of 70 feet per minute the cutter will make 135 revolutions per minute, and as we have $\frac{1}{8}$" feed per revolution, the feed per minute will be $16\frac{7}{8}$". This illustration also shows that it is the peripheral teeth of the end mill and not the face or end teeth which do the cutting, and it further shows that only $\frac{1}{64}$" of the edges of the face teeth come into play.

In the end mill shown the body is counterbored. This is done mainly to provide for many regrindings. The corners of the teeth are rounded or beveled. These extreme corners, if made sharp, are the weak points of the cutter. A rounding or beveling of this corner adds much to the life of the cutter.

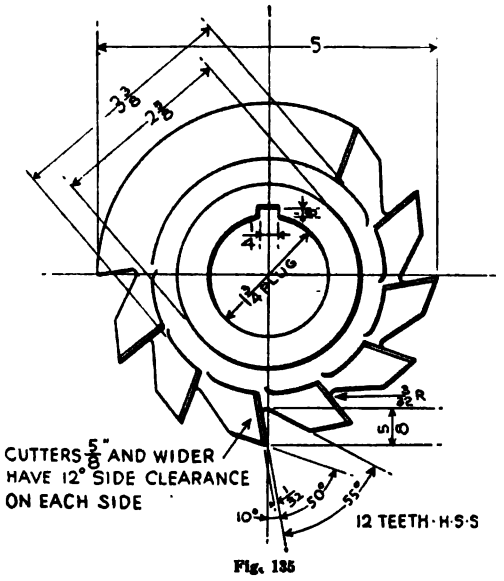

Fig. 135

Side Mills. A modern Side Mill, 5" diameter, is shown in Fig. 135. As practically all of the work done by a side milling cutter is done by the peripheral teeth, it is important that these teeth should be undercut.

When side milling cutters are to be used for milling slots in which the periphery and both sides are in action, and if the correct width of the slot is known, then a cutter may be designed with rake in all directions by simply building the cutter out of two similar

cutters placed side by side with the peripheral teeth cut spirally, one-half being right-hand and the other half being left-hand (see Fig. 136). The cutter as shown is made in such a way that the proper width of cut can be maintained by placing spacers between the two halves. If the two halves of the cutter were flat where they join each other, then the spacing out would leave an opening between them and this would leave a ridge in the work. For this reason they are made interlocking and the teeth of one-half overlap those

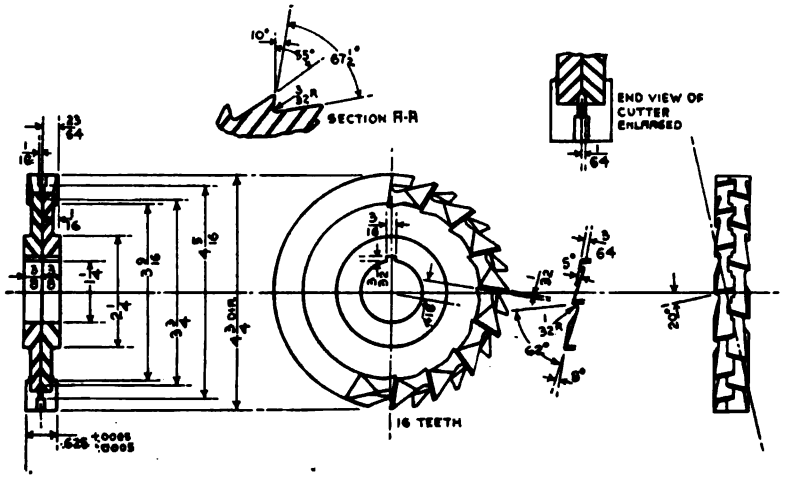

Fig. 136

of the other. The construction as shown has another advantage, namely, that though the teeth are wide-spaced, there will be no hammer blow because the teeth of one-half are in action before those of the other half are out of action.

Shell End Mills. Fig. 137 shows a 2½" Shell End Mill. Shell end mills are in all respects similar to the taper shank end mills, except that the angle of the spiral is 15° instead of 20°. This style of cutter is seldom used as a spiral mill. Its action is the same as that of face mills described later. These cutters are driven by shrinking them on to a short arbor, about .0005" larger in diameter than the standard size of the hole in the cutter. Placing the cutter in boiling water heats it sufficiently to let the arbor enter. In addition, the arbor is provided with a driving key.

Reference is made to the action of this style of cutter in Chapter V. The action is entirely different from that of a plain or spiral

mill. The face mill makes a chip like that of a planer tool, the only difference being that the tooth of a face mill sweeps in a circular path, whereas the planer tool removes the chip along a straight line, the side of the tooth doing the cutting.

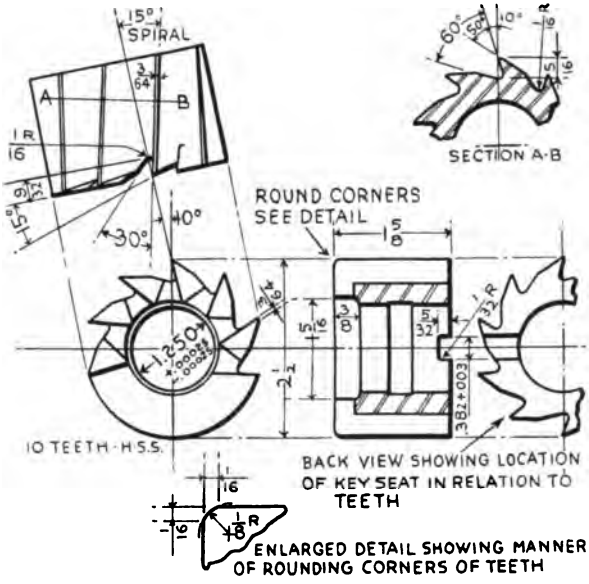

Fig. 137

Face Mills. Fig. 138 shows a 9½" Cincinnati Standard Face Mill, and Fig. 139 the corresponding size of High-Power Face Mill. They are similar in most respects, the difference being that the High Power Face Mill is especially built for the heaviest kind of duty. Both styles consist of a body in which slots are milled for the insertion of the blades. These bodies are made of steel. The slots for the blades are milled in the body at an angle of 7° with the center line. The blades themselves are made out of rectangular stock, ground to a driving fit into these slots. The blades are held in place by pins which are flattened on one side, thus making a wedge as clearly shown in the illustration. This brings the backs of the blades up against solid metal, and the amount of this metal is sufficient to support the blades under the heaviest cuts. A heavier stock is

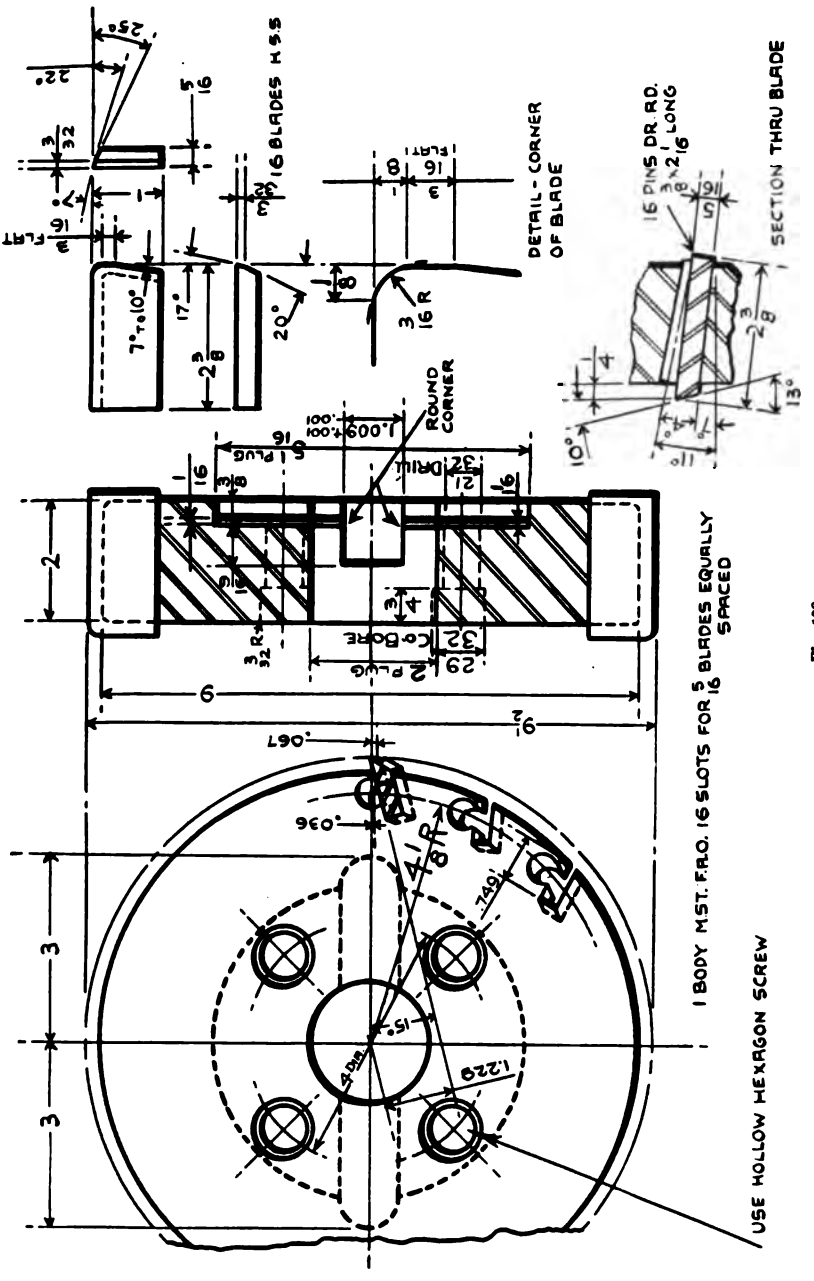
16 BLADES H.S.S.
DETAIL - CORNER OF BLADE
16 PINS DR. RD. 3/8 × 2 1/16 LONG
SECTION THRU BLADE
ROUND CORNER
1 BODY MST. F.R.O. 16 SLOTS FOR 5/16 BLADES EQUALLY SPACED
USE HOLLOW HEXAGON SCREW

Fig. 138

used for the blades of the High Power Face Mill than for those of the Standard Face Mill. Though the blades are driven in and held by the taper wedge, it is possible to take such heavy cuts that the blades will move endwise and it is for this reason that the High Power

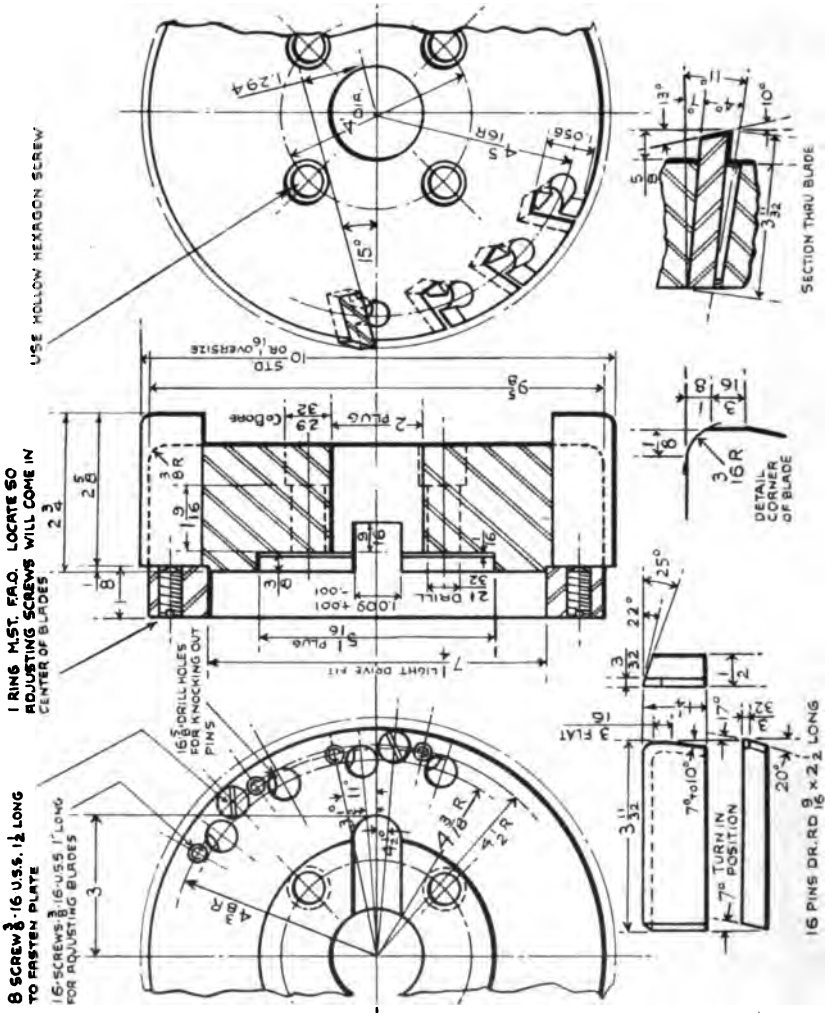

Fig 139

Face Mill is provided with a backing-ring, which is bolted on to the body of the mill. This backing-ring holds screws supporting each blade individually. This arrangement also permits of setting the blades forward as wear takes place.

Particular attention should be paid to the angles. The rake angle, that is, the angle which the face of the blade makes with the radial line is 15°. The clearance angle on the peripheral edge is 7°. That portion of the blade which has this clearance angle is only $\frac{3}{32}$″ wide, and the blade is ground away at an angle of 25° back of this narrow land; that is, at 10° with the tangent at this

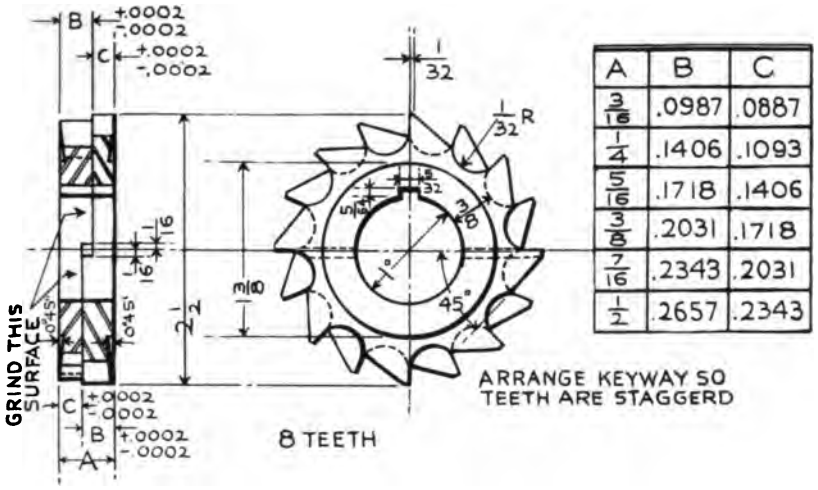

A	B	C
3/16	.0987	.0887
1/4	.1406	.1093
5/16	.1718	.1406
3/8	.2031	.1718
7/16	.2343	.2031
1/2	.2657	.2343

Fig. 140

A 2½″ diameter interlocked splining cutter.

point. This is done mainly to avoid unnecessary grinding when regrinding the cutter. The face edges have a clearance of 10° and are ground away at an angle of 20°; that is, 13° with the body of the mill. The blades are set at an angle of 7°, with the axis of the mill, so as to provide some rake at the point where the face edge of the blade slides over the finished work. Though, theoretically speaking, this face edge does no cutting, in reality it does remove a small amount of metal which is left there due to the spring in the work, the fixture, or the machine. It should also be noticed that the face edge of the blade is not left straight, as it is in taper shank end mills. There is first a rounded corner with a $\frac{3}{16}$″ radius, then a flat part $\frac{3}{16}$″ wide, and then the rest of the face edge of the blade is ground away with an angle of 7 to 10°. As there are 16 blades in the 10″ face mill, and as these blades are 1¼″ wide, there would be 20″ of cutting edge resting on the work if these blades were not ground back. If the width of the work is somewhat less than 10″,

somewhat less than 20″ of blade would be resting upon it, but in either case this would have a tendency to chatter.

Too much stress can not be laid on the necessity of making both the body of the cutter and the blades as heavy as it is practical to make them. We can only give here sufficient information to enable the toolmaker to comprehend the principles on which correct cutter design is based. Lack of space forbids us to go into detail and we will only show here a few additional examples of milling cutters with notes as to their principal features.

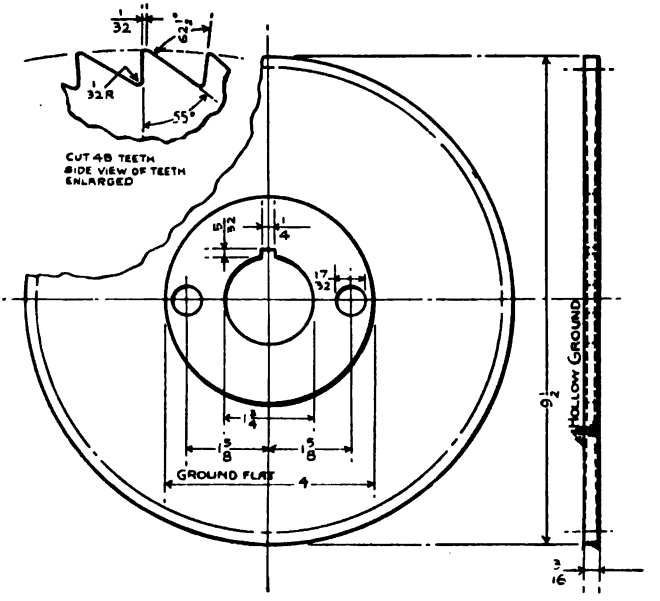

Fig. 141

Splining Cutters, Saws, Slotting Cutters, etc. Fig. 140 shows a Splining Cutter made interlocking, and particular attention is called to the simple method of interlocking, the entire half of each part being made thinner than the other half. This design works well for cutters from $\frac{3}{16}$″ face up.

Fig. 141 shows a Saw arranged to be driven not only by the key, but also by two pins which are held in a flange keyed to the arbor.

Fig. 142 shows a thin Slotting Cutter. These thin slotting cutters are quite capable of doing very rapid milling, except for the fact that the body is liable to break through the keyway, and even if

they do not break, the small amount of bearing which the cutter has on the key is liable to indent the key, making it very difficult to remove the arbor collars. For this reason such narrow cutters should be made with hubs as shown.

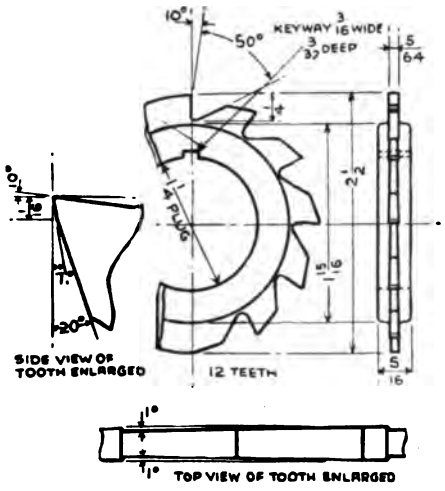

Fig. 142

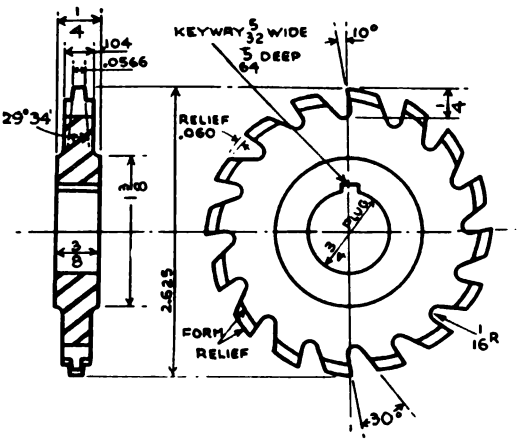

Fig. 143

Fig. 143 is a Thread Milling Cutter. The particular screw to be cut has no finish except on the threaded portion, and the cutter is arranged in such a way that it turns up the outside while it mills the thread. This cutter, also, is provided with a hub.

Fig. 144 shows another cutter provided with a hub, and which has some features that are worth noting. It will be seen that the teeth have alternate side rake in opposite directions, and further, that the teeth are not the full width of the cut to be taken. This arrangement allows the chips to come out freely, makes a very smooth side cut and prevents the chips from sticking in the cut. It often happens that when the chip is the full width of the cut the expansion of the chip wedges it in the cut and this causes not only excessive power consumption, but also more especially, a rough side finish.

Fig. 145 shows a cutter of much the same peculiarities except that it has no side cutting teeth. Each tooth, however, is given side rake and the teeth are again relieved so as to prevent wedging of the chips. It will be observed that the relief consists of beveling the edge of each tooth alternately and is always found on the side

of the tooth where there is no rake because it is the rake side only that is expected to do work.

Formed Cutters. Fig. 146 shows a Form Relieved Cutter, for finishing parts to an exact outline. These cutters are sharpened by grinding the faces of the teeth, and they retain their original outline, providing the teeth are always ground radially and straight. Cutters for cutting the teeth in gears belong to this class.

Fig. 147 shows a Gear Stocking Cutter on which the alternate teeth are provided with right and left-hand side rake, all teeth having 10° undercut. This cutter has proven extremely satisfactory for roughing out gears.

Fig. 148 shows an inserted tooth End Mill made in one piece with the shank. In the smaller sizes this makes a stronger mill than when the body and shank are separate, since in that case

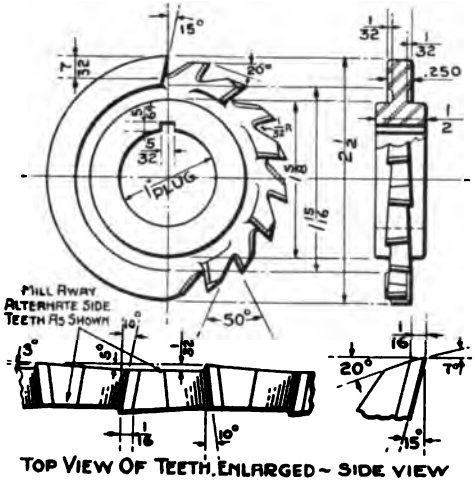

Fig. 144

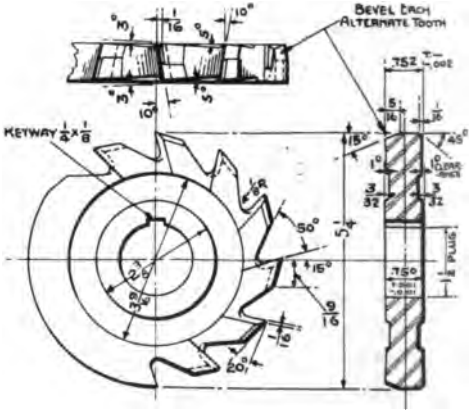

Fig. 145

the end of the shank must be quite small in diameter because the body of the mill will not admit of a large bore.

Fig. 149 shows an Angular End Mill made in one piece with the shank.

Fig. 150 shows an Angular Milling Cutter for use on an arbor.

Helical Mills. Fig. 151 shows what we call a Helical Cutter, because its most striking feature is that the teeth are formed in a helix around the body. This cutter has several peculiarities which

make it capable of doing some work which can not be done with ordinary cutters, and which, on the other hand, limit its usefulness in other directions. This cutter is made as shown in the illustration

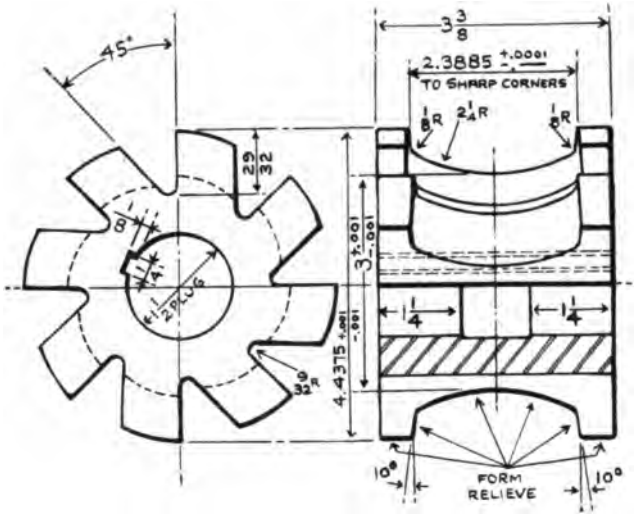

Fig. 146

as a single cutter, or sometimes as an interlocked cutter, right and left-hand. It might be supposed that the end thrust must be con-

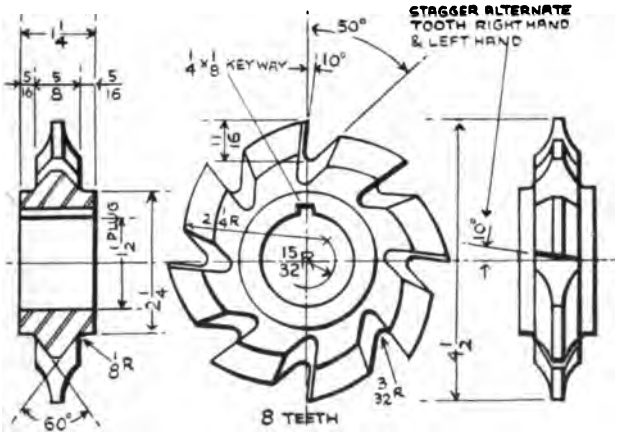

Fig. 147

siderable with such a cutter, and for this reason the first cutters of this nature were made right and left. Tests have shown, however,

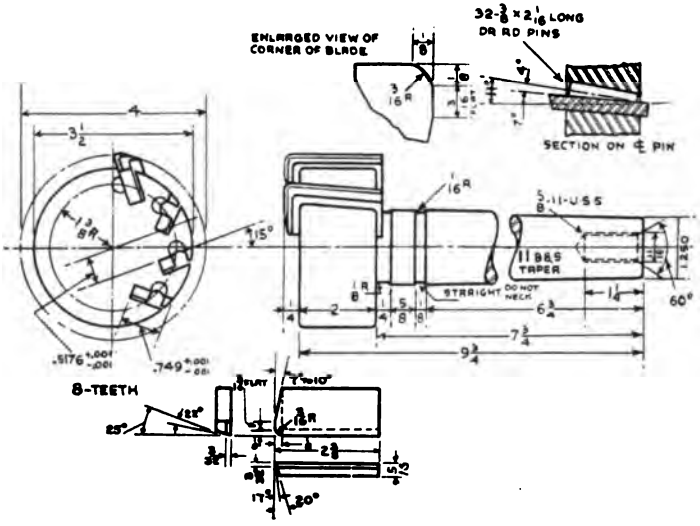

Fig. 148

An inserted tooth end mill with shank.

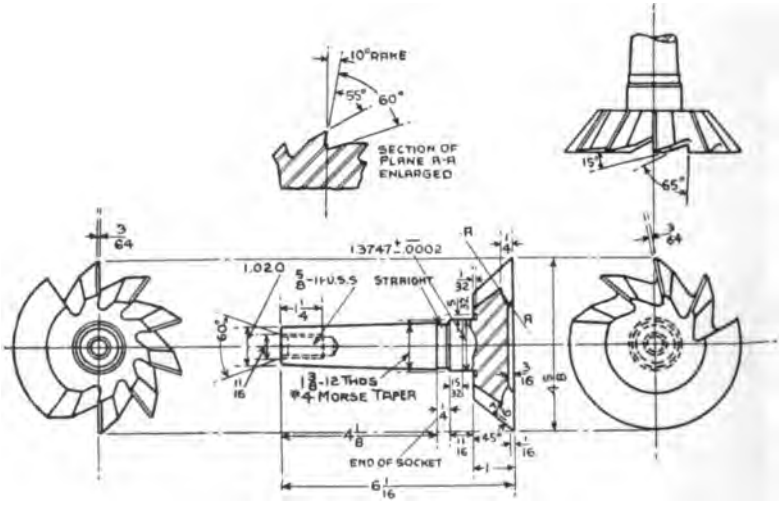

Fig. 149

that a cut which requires 80 amperes current with a right and left-hand cutter, requires 85 amperes with a single cutter, so that the end thrust amounts to only about 6% of the power required for the cut.

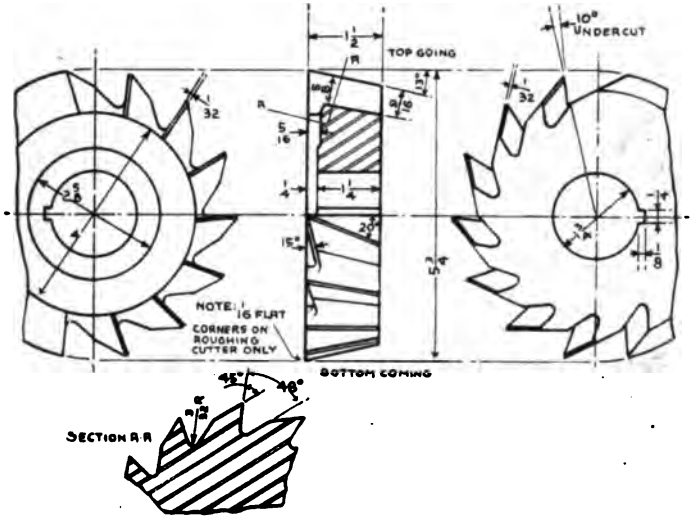

Fig. 150

The distinctive features of this cutter are that it cuts with a shearing cut; that it pushes the chips off sidewise; that it makes toothmarks, and not revolution marks; and that it does not spring away from the work. This latter property makes it especially

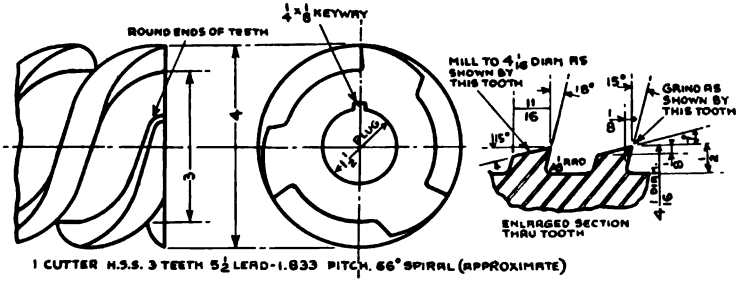

Fig. 151

valuable for cuts on thin work. If, when a cut is in progress, the feed be stopped while the cutter still rotates in contact with the work, it will be found after the feed has been reengaged and the cut finished that no mark is left on the finished surface at that point where the

feed temporarily ceased. The only indication of the stopping of the feed will be that a somewhat different gloss will be observed at that point. This property of the cutter makes it possible to start a cut by feeding the work upward and then changing the direction of the feed, say, to the horizontal, without causing a depression where the change of direction took place. Thin plates, springy work, copper bars, test pieces of boiler steel, etc., have been very successfully milled with this cutter.

Fig. 152

An example of work that this cutter will do successfully, and which is practically impossible with any other equipment, is shown in Fig. 152. This consists of milling steel test bars to size, Fig. 153. As is well known, these bars must have an accurate section and the sides must be parallel, and to size. In the illustration shown a number of pieces were clamped together for convenience in holding. The total width of the cut was $4\frac{1}{4}''$, the depth $\frac{1}{4}''$, and the feed $4\frac{3}{4}''$ per minute.

The work is first fed vertically to the cutter, then the horizontal feed is thrown in, and the cut is taken the proper distance. Because of the free cutting action of this cutter the work can be fed first vertically, then stopped and finally fed horizontally without leaving an offset, thus insuring bars of the same sectional area throughout the entire length, with sides parallel and accurate for size.

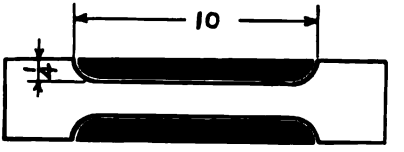

Fig. 153

Any other form of milling cutter will dig into the work and leave a groove in the work at the time when the vertical feed is stopped and before the table feed can be engaged.

Another illustration of this cutter at work and one which also

shows the nature of the chip is shown in Fig. 133. An even more definite idea of their form may be obtained from the chips at D in Fig. 121, and at E in Fig. 122.

Fig. 154 shows a modification of this cutter milling the steel Universal Joint Shafts for Cincinnati Milling Machines. These shafts are turned with a head, the diameter of the head being equal to the largest diameter seen in the illustration. The cross feed

Fig. 154. No. 3 Vertical with Circular Attachment and Helical Mill
Speed, 94 revolutions. Feed, 2¼" per minute. Time, per piece, 7 minutes.

brings the cutter into proper depth; the longitudinal feed then is used, after which the circular feed forms the rounded end; the longitudinal feed is then used once more on the opposite side of the piece and this finishes the operation.

Fig. 155 shows another modification of this Helical Mill as used for milling out the ends of connecting rods. A single hole is drilled, the cutter inserted and the table is fed first horizontally and then vertically so that the cutter, traversing a rectangular path, cuts the desired opening into the end of the rod. A final finishing cut then brings the opening to size and proper finish. Rods 5" thick have been successfully milled with a cutter 1¾" diameter at a roughing feed of ¾" and a finishing feed of 3 11/16" per minute.

Making Spiral Milling Cutters. The Milling Machine is shown set for making spiral cutters in Fig. 156. The table is swiveled

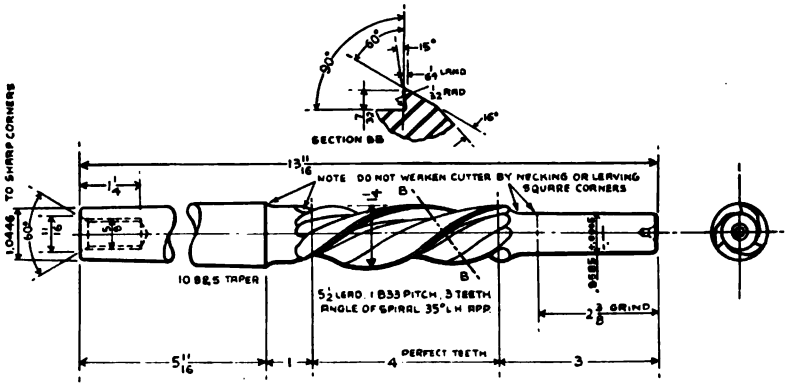

Fig. 155

to the proper angle and the Dividing Head is geared, all as given in the table, page 170.

Setting the Cutter. The cutter should be set before the table is swiveled. Since spiral mills are always cut with a double angle cutter, usually one that has a 12° angle on the side which forms the

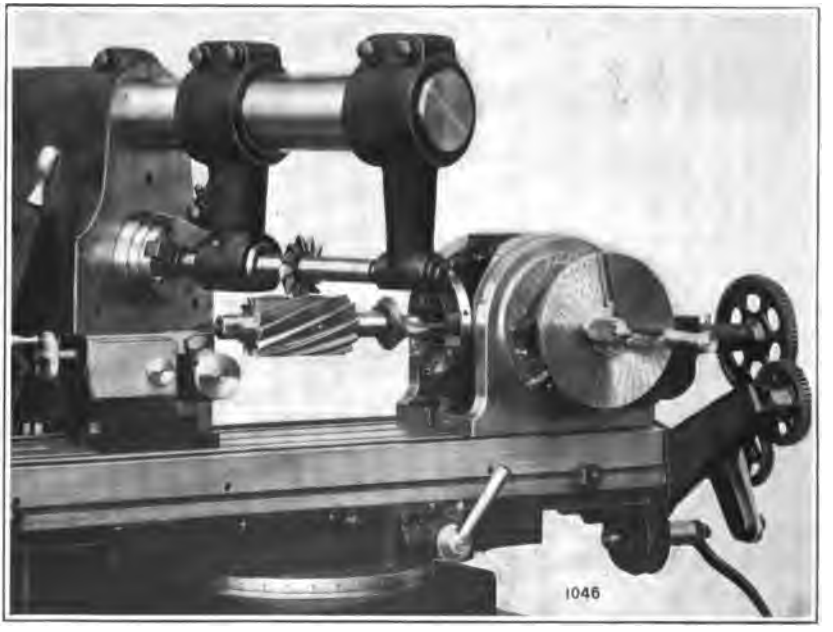

Fig. 156
Taking one of the two cuts required when making a modern spiral mill.

cutting face of the tooth, it is necessary to adjust the work off center, so that when the cutter is the right height above the head centers to give us the proper depth of cut, a straight edge placed along the edge of the tooth on the 12° side will line up with the dividing head center. This will give us radial teeth as shown in Fig. 157.

However, the new cutters with undercut faces and wide-spaced teeth require two cuts. The setting of the cutter in relation to the work is shown in Fig. 158. In this case it will be noticed that the work must be offset more than in the previous case. It should be offset so that a straight edge placed along the edge of the cutter on the 12° side will form an angle with a line drawn from the outside diameter of the work to the center of the headstock of 10° for 10° undercut, and 15° for 15° undercut cutters.

This leaves the tops of the teeth entirely too wide as at a, Fig. 158. A second cut is then taken to bring the teeth to proper form as at b and c.

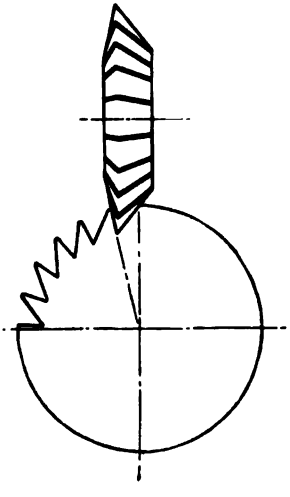

Fig. 157

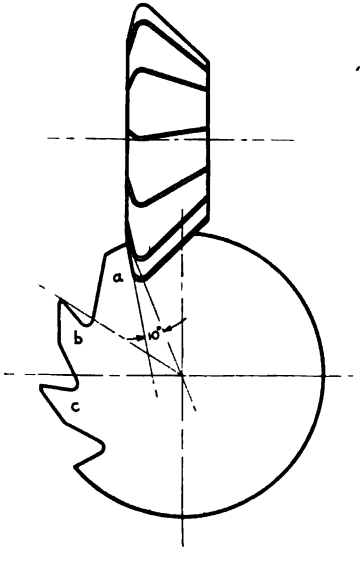

Fig. 158

Leads, Change Gears and Angles for Making Spiral Milling Cutters

Diameter of Cutter	Lead in Inches	Gear on Worm	1st Intermediate Gear	2d Intermediate Gear	Gear on Screw	Angle for Setting Milling Machine Table
1/2	3.24	28	48	40	72	25 3/4
5/8	4.17	40	64	48	72	25 1/4
3/4	4.68	40	64	56	72	25 3/4
7/8	6.12	56	40	28	64	24 1/4
1	6.67	64	56	28	48	25 1/4
1 1/4	8.33	48	32	40	72	25 1/2
1 1/2	10.29	72	40	32	56	24 3/4
1 3/4	11.66	56	32	48	72	25 1/4
2	13.33	64	32	48	72	25 1/2
2 1/4	15.24	64	28	48	72	25
2 1/2	16.87	72	32	48	64	25
2 3/4	18.75	72	32	40	48	25
3	19.69	72	32	56	64	25 1/2
3 1/4	21.43	72	28	40	48	25 1/2
3 1/2	23.33	64	48	56	32	25 1/4
3 3/4	25.57	100	64	72	44	24 3/4
4	26.67	64	28	56	48	25 1/4
4 1/4	28.67	86	48	64	40	25
4 1/2	30.71	86	32	64	56	24 3/4
4 3/4	32.73	72	32	64	44	24 1/2
5	32.73	72	32	64	44	25 3/4
5 1/4	34.72	100	24	40	48	25 1/2
5 1/2	37.04	100	24	64	72	25
5 3/4	39.29	100	28	44	40	24 3/4
6	39.29	100	28	44	40	25 1/2

Leads, Change Gears and Angles for Making Spiral End Mills

Diameter of Mill Inches	Lead in Inches	Gear on Worm	1st Intermediate Gear	2d Intermediate Gear	Gear for Screw	Angle for Setting Milling Machine Table
1/4	2.08	24	64	40	72	20 1/2
3/8	3.24	28	48	40	72	19 3/4
1/2	4.17	40	64	48	72	20 1/2
5/8	5.44	56	40	28	72	20
3/4	6.48	40	48	56	72	20
7/8	7.41	40	48	64	72	20 1/4
1	8.33	48	32	40	72	20 1/2
1 1/8	9.70	64	48	32	44	20
1 1/4	10.94	56	32	40	64	20
1 3/8	11.84	64	24	32	72	20
1 1/2	13.12	56	32	48	64	20
1 3/4	15.24	64	28	48	72	20
2	17.14	72	56	64	48	20 1/4
2 1/4	19.59	64	28	48	56	20
2 1/2	21.43	72	28	40	48	20 1/4
2 3/4	23.33	64	48	56	32	20 1/4
3	26.25	72	48	56	32	19 3/4
3 1/4	28.00	64	40	56	32	20
3 1/2	30.86	72	28	48	40	19 1/2
3 3/4	31.50	72	40	56	32	20 1/2
4	34.55	86	56	72	32	20

The No. 1½ Cincinnati Universal Cutter and Tool Grinder

(Patents Rights Fully Reserved)

CHAPTER X

CUTTER SHARPENING

Exhaustive experiments made by The Cincinnati Milling Machine Company show that the clearance on the cutting edge of a cutter plays an important part in the output of the machine. No arbitrary clearance angles for given materials can be laid down because other conditions also influence the matter. It has been found by keeping

Fig. 159

a careful record that it is possible to decide on a correct clearance for a given piece of work which will increase production as much as 50% over the best average practice.

We can not emphasize too strongly the importance of NOT ONLY SHARP cutters, but PROPERLY SHARPENED CUTTERS. Even a milling department which keeps its cutters sharp and does not employ proper clearance angles may fall as much as 20% short of the possi-

ble output without realizing it, as there will probably be no indication of serious trouble. Cutters as sent out by the cuttermakers are ground to a standard clearance and usually have too much clearance for satisfactory operation. It is always best therefore, to sharpen a new cutter before putting it into use.

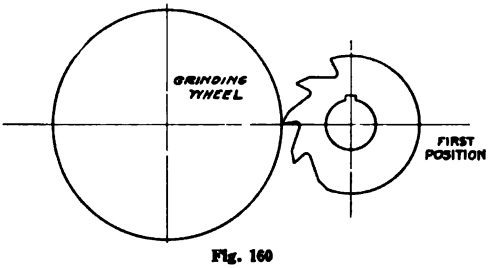

Fig. 160

In order to provide the means for keeping cutters as well as other tools, in properly sharpened condition, in the easiest and quickest way, a cutter grinding machine as shown on page 171 should be used. Its application is indicated by the illustrations.

Fig. 159 shows the setting preliminary to sharpening a spiral milling cutter. The cutter mounted on a mandrel and held between centers in the usual way, is adjusted vertically to the proper height by raising the knee until the gauge A coincides with the line B on the column. This brings the center of the cutter in the same horizontal plane with the center of the emerywheel. The setting gauge is now placed in position so that its end E is immediately in front of the emerywheel and one tooth of the cutter is brought to the gauge, which also brings it in the same horizontal plane with the center of the cutter and the emerywheel head. The gauge is now removed and the cutter is revolved downward through the exact angle required for clearance. This angle is read directly from the dial on the headstock of the grinder. The spindle must now be locked in position by means of the set-

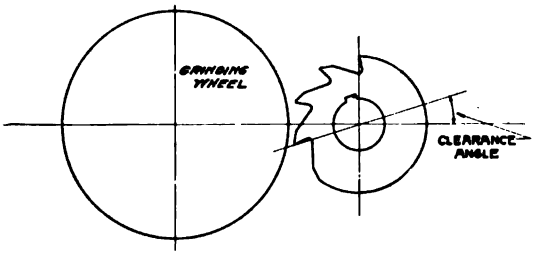

Fig. 161

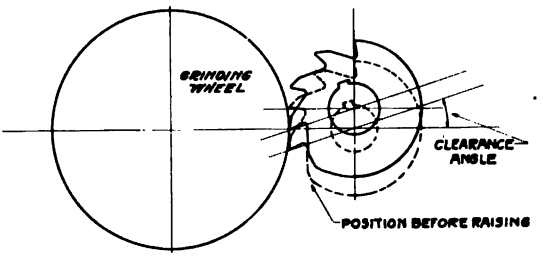

Fig. 162

screw D. After this the work is again adjusted vertically until the same point of the cutter tooth rests on the tooth gauge as before and the cutter is in position for sharpening. The toothrest is now placed against the tooth at this same point immediately in front of the

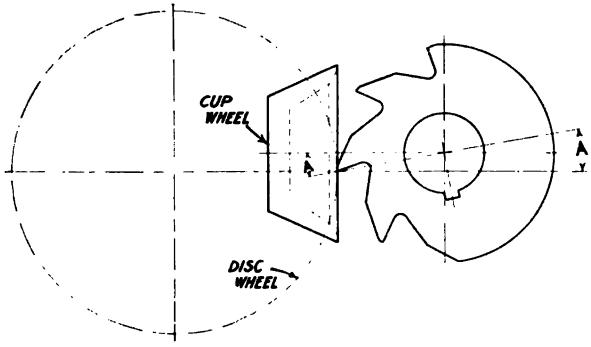

Fig. 163

emery wheel and secured in position. We are now ready to grind, after first unlocking the spindle and removing the setting dog F.

The three positions which the cutter occupies in relation to the grinding wheel are shown in Figs. 160, 161, 162. Reading the clearance angle direct is a new feature in grinding machines, and is one of the greatest importance, since it not only makes the setting of

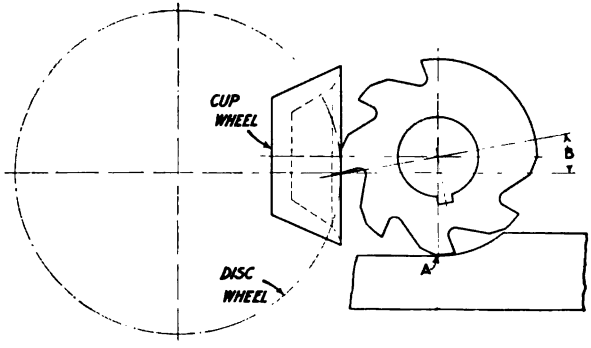

Fig. 164

the machine a much quicker operation, but in addition, it makes positive the accurate determination of the required angle. The importance of grinding to the correct clearance angle can hardly be overestimated.

If a cutter is ground with too much clearance, it is certain to be unsatisfactory because of its tendency to dig into the work and cause chattering. On the other hand, if it does not have enough clearance, the heel of the cutter blade will drag and, of course, the cutter can

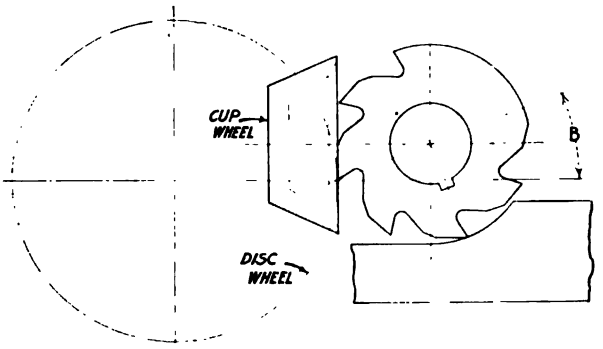

Fig. 165

not cut. The correct relation of either a cup wheel or a disk wheel to the cutter is shown in Fig. 163. A is the clearance angle. After that angle which has proven best for a given piece of work has been determined by experience, a record should be kept and then, by means of the above described device, this clearance angle can be duplicated exactly, every time the cutter is sharpened.

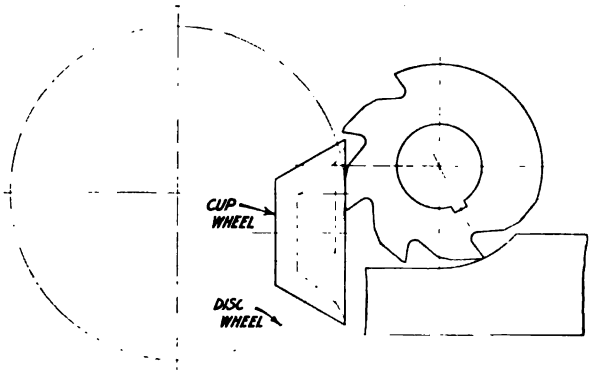

Fig. 166

However, care must be taken to keep the land, that is, the narrow edge of the blade immediately back of the cutting edge, the proper width, about $\frac{3}{64}$". Repeated grindings widen this surface, as shown in Fig. 164, with the result that although the clearance

angle may be correct, the heel of the blade will drag as indicated at A. Such cutters usually give rise to the belief that there is not enough clearance and the cutter is reground with a greater clearance angle as shown in Fig. 165. When it is again reset on the milling machine the heel will not drag but the cutter will have too much clearance and be unsatisfactory.

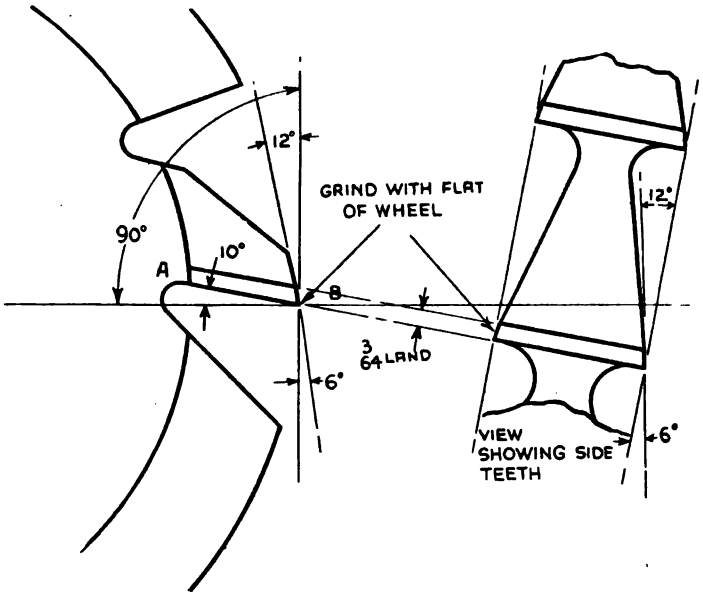

Fig. 167

Renewing Worn Cutters. Fig. 166 shows the proper method to pursue. The cutter should be placed in the grinder and set at a sufficient angle to grind the entire heel of the blade away, pretty much as we would do were we to anneal and remill the cutter. In this way we can practically renew the cutter by restoring the land to the proper width. For this work it is best to use a cup-shaped wheel and the cutter can be raised up high enough so that the blade next to the one being ground will clear the wheel. After this has been done the cutter can be ground to the correct clearance as shown in Fig. 163. By this method of renewing cutters their length of life can be very much increased.

A Correctly Sharpened Cutter. An example of correct cutter sharpening is shown in Fig. 167. This is one of a gang of side mills that were sharpened for milling cast iron. The sketch shows a land

of $\frac{3}{64}$", and this land is ground at an angle of 6°. This is the clearance angle. Then the tooth of the cutter is ground down immediately behind the land at about 12°. This angle should be left as small as permissible, its only purpose being to prevent the heel of the cutter from dragging on the work.

Fig. 168. Face Teeth, Shell End Mill

The side teeth are ground in exactly the same way, with a $\frac{3}{64}$" land, a 6° cutting clearance, and then backed off 12°. If these cutters were to be used on steel the proper peripheral clearance would be probably 4° instead of 6°, and the same is true of the clearance for the side teeth. When cutters like this show a tendency to chatter it is best to reduce the clearance on the side teeth. On

Fig. 169. Blades, Hand Reamer

some work this may be reduced to as small as 1°, and conditions will be improved still farther if the sides are somewhat hollow ground; that is, if the face of the cutter is thinner at the inner

end A of the side teeth than at the outer end B. No fixed rules can be given for the clearance angles on cutters. This depends on the material being milled, the depth of cut, the style of cutter, etc. In general practice 5° to 7° for cast iron and 3° to 4° for machinery steel will be found quite satisfactory for spiral mills.

In Fig. 168 the machine is shown sharpening the end teeth of a shell end mill. The mill is held on its shank in the spindle of the

Fig. 170. Peripheral Teeth, Large Face Mill

grinder exactly as it is held in the spindle of a milling machine. It can not shift endwise and is freely revolved by turning the spindle. The clearance angle which experience has shown to be correct is read direct from the graduated dial on the grinder head.

Hand reamers are sharpened as shown in Fig. 169. For such work the face of a cup-shaped wheel is used. The setting for clearance is the same as for a milling cutter. For all this work the same toothrest is used. There is only one universal toothrest necessary for the range of work done on this machine. The blade is set in a clapper-box which easily yields when the cutter is revolved to bring the next tooth in position, and the heavy gauge steel blade forms a solid support for the cutter when grinding.

For the sharpening operations the machine is provided with a lever feed. The lever can be adjusted to any position around the machine that is handiest for the operator. The swivel head has a No. 12 B. & S. taper hole with collets to bush down to the other standard tapers used on milling cutters so that all cutters can be held on their own shanks as when in place on a milling machine.

In Fig. 170 the machine is shown sharpening the peripheral teeth of a large face mill. The mill is held on a shank which fits into the taper hole of the spindle in exactly the same way as the end

mill in Fig. 154 is held, and the same principles as described in the preceding paragraphs are followed in setting for the proper clearance.

Face mills should have the corners of the blades ground approximately round to a $\frac{1}{8}$" radius, as shown in Fig. 171. This is done by first grinding to a 45° angle and then again grinding off the corners by first setting the machine to 22½° and then to 67½°. The face edges of the blades of face mills should have a land about $\frac{3}{16}$" wide and the balance of the blade should be ground off at an angle of about 7° or 10° towards the center of the cutter.

Gear Cutter Sharpening. Gear cutters are all made as patent relieved cutters and can be ground on the face without changing their shape. However, it must be remembered that the shape of the tooth is preserved only if the cutter is ground radially. As soon as the face of the tooth has been ground away from radial, then it will cut a gear tooth of a different shape than the original section of the gear cutter. In order to have all teeth of the cutter do an approximately equal amount of work, they must all be at the same distance from the center of the cutter. To grind such cutters properly, we must not depend on the correctness of the spacing of the cutter teeth, for, though this spacing may have been indexed accurately when the cutter was being milled, it may have changed somewhat in hardening. In order to grind gear cutters correctly we should grind the back of each tooth before using the new cutter. This back should be located from some section of the tooth curve and it makes no difference from which section. We should, therefore, place a stop somewhere on our grinding device, place the top of a tooth against this stop and grind the back of that tooth. Then lift the cutter away from the stop, turn it one tooth and locate the top of the next tooth against this same stop; then grind the back of this tooth, and so on. In this manner we get the backs of all the teeth in the same relation to a normal section of the tooth.

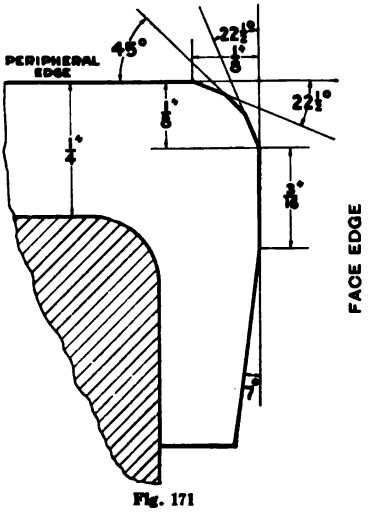

Fig. 171

Now when we want to resharpen the cutter at any time, we simply place the back of the tooth against the toothrest while we are grinding the cutting face, and all we then need to take care of is to grind these faces radially.

The Correct Way to Sharpen Gear Cutters. In order to sharpen gear cutters correctly, it is necessary that the feed of the cutter to the grinding wheel should be a rotary or circular feed. This is provided for in the Patented Gear Cutter Sharpening Attachment of the Cincinnati Cutter Grinders. It is shown in operation in Fig. 172. The gauge B is swung around to line up with the face

Fig. 172. The Cincinnati Patented Gear Cutter Sharpening Attachment

of the tooth and the cutter is set to this gauge. At the same time we adjust the spring pawl to the back of the tooth. Then, during the grinding process, the cutter is adjusted radially to the grinding wheel by means of the adjusting screws A. The effect of this is clearly shown in Fig. 173.

With this device the faces of the teeth will always be ground radially, no matter how much is taken off at one grinding. The only variation from the radial line will be that due to the wear of the grinding wheel, when cutters have been very dull, requiring a great deal of grinding. In such extreme cases, after the teeth are ground sharp, it is best to reset the cutter to the gauge as in the beginning and then grind all of them once more, taking only a light cut.

The ordinary gear cutter sharpening machine or attachment provides for radial setting when putting the cutter in position for

grinding, but on such machines the adjustment of the work to the grinding wheel is done by using the cross feed or the table feed, which brings the work straight to the wheel. This results in grinding along a line parallel with the radial line as shown in Fig. 174, but not on the radial line. The more ground off at such a setting, the

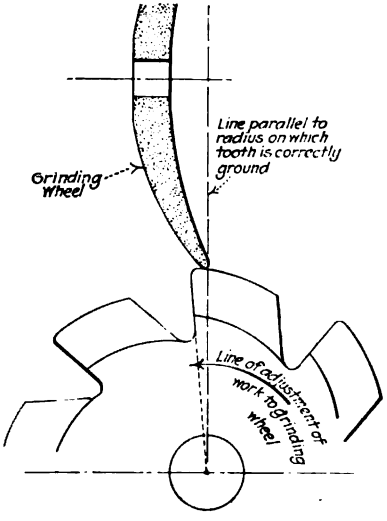

Fig. 173

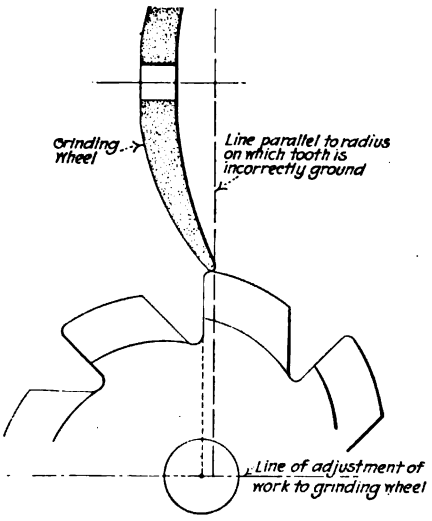

Fig. 174

more the cutter will be spoiled. The original outline is lost and perfect gears can not be cut by a cutter deformed by this method of sharpening.

We publish a separate book which shows the Nos. 1 and 1½ Cincinnati Cutter and Tool Grinders in operation on a variety of work, and gives complete instructions for their use. This book is sent free on application.

CHAPTER XI

POWER REQUIRED TO DO MILLING

When a given piece of work is to be milled we must first decide upon the machine on which the work shall be done. In order to reach this decision we must know the cutting capacity of the machine. The normal horsepower of the machine is usually given in the specifications printed in milling machine catalogs. When this is not given we can very easily figure the horsepower of a Cone-Driven Machine if we know the size of the cone steps and the back gear ratio, and that of a High-Power Machine if we know the width and speed of the driving pulley.

The Driving Power of a Milling Machine

Cone-Driven Machines. EXAMPLE: To figure the horsepower of a Cone-Driven Machine, assuming a No. 3 Plain Cone Type Cincinnati Miller that is to run at 74 revolutions. The speed plate shows for 74 revolutions—

Belt on large cone step.
Second back gear in.
Countershaft 260 revolutions.

We have the following data to go by:
Diameter large cone step = 12″.
Width of belt = 3½″.
Second back gear ratio = 3.15 to 1.

The speed of the driving cone is therefore—
3.15 x 74 (the speed of the spindle) = 233.1 rev.

Assuming a belt pull of 50 lbs. per inch width of belt, our formula now is—

$$\frac{\text{Diameter of cone step in inches} \times 3.1416 \times \text{speed of pulley} \times 50 \text{ lbs.} \times \text{width of belt}}{12 \times 33{,}000} = \text{H. P. delivered to machine.}$$

Substituting our values in the above equation, we get—

$$\frac{12 \times 3.1416 \times 233.1 \times 50 \times 3.5}{12 \times 33{,}000} = 3.9 \text{ horsepower delivered to the machine.}$$

It must be remembered that for a Cone-Driven Machine the horsepower must be figured separately for each speed.

High Power Machines. EXAMPLE: To figure the horsepower of a Constant Speed Drive Machine: The horsepower delivered to a No. 2 Plain High Power Machine is found from the following data:

Diameter of pulley = 18″.
Width of belt = 3″.
Belt pull = 50 lbs. per inch width.
Speed of pulley = 325 rev.

Substituting in the above formula, we have—

$$\frac{18 \times 3.1416 \times 325 \times 50 \times 3}{12 \times 33{,}000} = 7 \text{ horsepower.}$$

The catalog motor rating of this machine is 7½ horsepower. Since the belt runs at constant speed, we can safely assume for present purposes that the High Power Machine delivers the same horsepower at the cutter for all speeds.

Cutting Capacity of Machine in Cubic Inches. The next thing to be determined is the amount of metal the machine equipped with the cutter to be used may reasonably be expected to remove per horsepower per minute. This will determine the feed that the machine can pull on the cut to be taken. We must now turn to tables A, B, C, D and E, on pages 147, 148, 149, 150, 151. The cuts shown there are maximum cuts and will serve as a safe guide if we reduce them by about ¼, and are sure to also take into consideration the depth and width of cut, the style of cutter used and the quality of material being milled.

Example: Assuming a No. 2 Plain High-Power Machine is equipped with a modern Cincinnati design spiral mill, and that it is to take a cut ⅛″ deep, 3″ wide in machinery steel. Has this machine the capacity to take this cut, and if so, at what maximum feed? Table B, page 148, shows that for a cut $\frac{3}{16}$″ deep, 5″ wide, cutter A removed 1.074 cubic inches per horsepower a minute. This is some-

what less than the metal removed in the deeper cuts, shown in tables C, page 149, and D, page 150. We will assume that for all practical purposes ¾ cubic inch is a safe figure for a ⅛″ cut.

The No. 2 Plain High-Power Machine has a catalog motor rating of 7½ horsepower. Seven and one-half horsepower at the machine should on the above assumption remove 5⅝ cubic inches of steel per minute. Our cut ⅛″ x 3″ has a ⅜″ section, and the machine working within its normal rating will therefore pull this cut at a feed of 5⅝ divided by ⅜, or 15″ per minute.

Therefore, any feed up to 15″ per minute may be used. The actual feed to be used must be determined by the other conditions under which the work must be milled.

Capacity of Cutters for Milling Cast Iron. It is well known that the cutting qualities of different castings vary considerably, but as a basis for estimating we will assume castings having the tough, close-grained, free-cutting quality of the better grade of iron used in machine tools. For such iron, we recommend that the figures in tables A, B, C, D and E, after being reduced by about one-fourth as above, be multiplied by 1.75 in each case to determine the cubic inches of cast iron that can be removed by one horsepower in one minute. For harder grades of iron a smaller factor must be used.

Applying this to the above example, we get—

¾ cubic inch x 1.75 = $1\frac{5}{16}$ cubic inches.

A 7½ horsepower machine will therefore remove 9.8 cubic inches cast iron per minute. Since the cut has a ⅜″ section, it is clear that the machine has the capacity to pull this cut at about 25″ per minute feed.

Cutting Capacity of Standard Cutters. Tables B, C, D and E are based on the use of modern design cutters. When estimating on milling work that is to be done with standard high-speed steel spiral mills as carried in stock by dealers, it may be best to use the results obtained in table A as a basis, taking into consideration the number of teeth in the cutter to be used.

Other Factors Governing Production. All of the above of course applies to maximum cuts. When the cut to be taken is known to be well within the capacity of the machine, there is no need of going through the above calculations, and the feed rate to be used must be selected to suit the following factors.

a. The strength of the work.
b. The capacity of the cutter.
c. The quality of finish wanted.
d. The accuracy required.

Since these items depend wholly on the character of each individual case, no data can be formulated for determining their influence on the feed rate.

Other factors entering into production are the handiness of the machine, and whether or not it is equipped with a power quick traverse and return, the method of milling followed and the extent to which jigs and fixtures are used. All of these things are treated in separate chapters under these headings.

CHAPTER XII

VARIOUS METHODS OF MILLING

In the great majority of shops the milling department is one of the most important departments. This is especially so in shops that manufacture a large number of duplicate parts. In such a shop any reduction of the time required for a milling operation is an important item of economy and justifies the management in spending some time and effort to determine the best way in which such a milling operation might be carried on. This refers not only to shops where thousands of similar pieces are made every year, but applies equally well to the ordinary manufacturing machine shop where lots of 20 or 30 are the rule, and large lots the exception.

When we have to do a milling operation on a piece of work, we know, of course, that we must have a suitable cutter and some device to hold the piece. If the number of pieces justifies it we make a special holding fixture, and perhaps a special cutter, and then we are inclined to think that we have done all that can be done.

However, in a large number of cases a more thorough examination will reveal the fact that the operation can be done in various ways, and a little study of the elements of the operation will soon show which method is the quickest. Take for example, a little bracket of cast iron, the foot of which is to be milled flat for bolting it to the frame of a machine. One cut will be enough to give the desired finish. No particular fixture is required to hold the piece as it can be easily held in an All-Steel Vise. No special cutter is required as the operation is straight slabbing. It would seem that this operation is so simple in all its elements that one method should be as good as another. Yet, this operation can be done in several different ways and with different degrees of economy. We may use a single vise as the average man would probably do; or we might use two vises, one behind the other, using the same kind of cutter; or we might design a special fixture which will hold a number of these pieces, one behind the other; or we might make a fixture which will hold a couple of pieces side by side, and perhaps two or three series of these pieces in tandem; or we might put the job on a Vertical Miller with one

vise, or with two vises, or with a special fixture; or we may build a special fixture and mount it on the Circular Milling Attachment. Here, then, are a number of methods for doing this simple operation. To more easily analyze this let us select a piece of cast iron 2″ x 4″, with straight sides, so that it can easily be held in the vise. Assume a cutting speed of 60 feet and a feed of .080 for the desired finish. Further, assume ⅛″ of material to be removed. With these data before us we will analyze some of the methods above mentioned.

First Method—Using One Vise. Place one vise on the Milling Machine table and use a spiral cutter 3″ in diameter and long enough to cover the 4″ width of the piece. As the thickness of stock to be removed is ⅛″, the cutter must travel practically ⅝″ before the center of the cutter comes to the edge of the work so that the total length of the feed will be 2⅝″. A 3″ cutter running at 60 feet per minute runs 76 revolutions per minute, and, as the feed per revolution is .080, it will feed practically 6″ per minute, so that the time required for the cut is $\frac{7}{15}$ of a minute, or practically 26 seconds. The machine must now be stopped, the piece removed, the table returned and a new piece put in place. Allow for stopping the machine 5 seconds, for removing the piece 10 seconds, returning the table 5 seconds, inserting a new piece 10 seconds, starting the machine 3 seconds, altogether 33 seconds. This, added to the 26 seconds for milling, makes 59 seconds for the entire operation. It should be kept in mind that all figures given here are merely assumed and are only used for comparison.

Second Method—Using Two Vises. Use two vises facing each other and placed lengthwise on the table. The operation is as follows: Put a piece in first vise; start machine. While milling the first piece put a piece in the second vise. When first piece is milled throw out feed and advance table so as to bring the second piece to cutter. Throw in feed, and while milling second piece remove first piece. When second piece is finished stop machine, remove second piece, return table and start the cycle over. Keeping the same elements as before, we will find the time required for two pieces as follows: Inserting first piece 10 seconds, start machine 3 seconds, mill first piece 26 seconds, disengage feed 2 seconds, advance table 8 seconds, engage feed 2 seconds, mill second piece 26 seconds, stop machine 5 seconds, remove piece 10 seconds, return table 10 seconds, altogether 102 seconds, or 51 seconds per piece. Considering that we gained 8 seconds per piece, this second method is

better than the first, when we have a large number of pieces to mill.

Third Method—Using a String Jig. Use a special holding device in which pieces are placed tandem. Such a device is usually called a string jig. Arrange the jig so that the pieces are very close together with only about $\frac{1}{16}''$ between them. Assuming 10 pieces in the jig, we proceed as follows: Put first piece in jig, advance the table, start machine, and while milling put in all the other pieces. As soon as the last piece is put in the jig, start removing pieces at the other end and stop the machine when the last piece has just passed the cutter. Time it so that only this last piece has to be removed when the machine is standing still. As each piece requires one extra $\frac{1}{16}''$, allow 27 seconds for the milling time instead of 26 seconds. But this is only for the first piece. All other pieces are milled in a shorter time, because the cutter is still on the first piece when it is entering the second. In other words, we do not need to make allowance for the $\frac{5}{8}''$ approach on each piece. Altogether the length to be milled is 10 times 2″ plus 9 times $\frac{1}{16}''$ plus $\frac{5}{8}''$ approach for the first piece. Altogether $21\frac{3}{16}''$. This will be accomplished in 210 seconds. We must now also consider the fact that the first piece is so short that it would be dangerous for the operator to insert the second piece while the first is being milled. He will therefore insert two pieces before he starts the machine. He will also leave two pieces to be removed when he stops the machine. We now find the time for ten pieces as follows: Inserting first two pieces 20 seconds, starting machine 5 seconds, stopping machine 5 seconds, removing two last pieces 20 seconds, returning table 15 seconds; altogether 65 seconds, plus the 210 seconds for milling, or 275 seconds. This is $27\frac{1}{2}$ seconds per piece or less than half the time required by the first method.

It might be asked here if it is possible for the operator to insert and remove 8 pieces during the milling time. As we allow 10 seconds for inserting and 10 seconds for removing one piece, it will take 160 seconds to insert and remove 8 pieces, whereas the cutting time is 210 seconds. The operator has therefore a margin of 50 seconds. The time required to place the jig on the milling machine is no greater than that required for one vise. If, therefore, the quantity of pieces to be milled per year is large enough to justify the expense of the fixture, this method should have the preference over the first and second methods. In considering the gain made we should not only consider the saving in labor cost, but also the im-

portant fact that an expensive machine is made available for some other operation.

We will not consider all the possible methods, but only enough to indicate how a variation of method may affect the output.

Fourth Method—Vertical Milling with One Vise. Using a Vertical Milling Machine with a 4½″ diameter end mill and one vise, holding the piece as in first method. The approach of this cutter is 1¼″; in other words the total feed should not be less than 3¼″. If the nature of the finish of the piece should require it we would have to go clear across the piece; in other words the feed would be the width of the piece plus the diameter of the cutter, which is 6½″. We see at once that under these conditions this method is slower than any of the previous ones. If the nature of

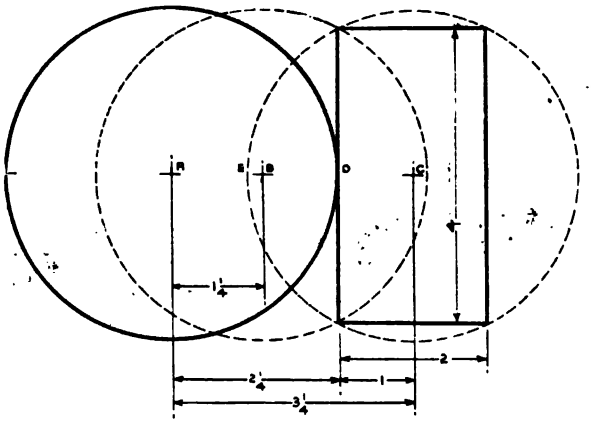

Fig. 175

Showing relation of overtravel of cutter to effective travel.

the finish is such that we can stop the machine as soon as the entire surface has been milled, we get the following conditions: Insert piece, advance the table, start machine, mill, stop machine, advance table far enough so as to clear mill, remove piece and start new cycle. We must not forget that a face mill does not make the ridges or revolution marks produced by a spiral mill, so that we may use a coarser feed, say .120 per revolution. We must further remember that, with the same cutting speed the face mill runs only 51 r. p. m. This will make the feed per minute 6.12″, and the time to pass over a piece 30 seconds. We find the time as follows: Insert piece 10 seconds, start machine 5 seconds, mill across 30 seconds, stop machine 5

seconds, advance table 3 seconds, remove piece 10 seconds; total 63 seconds, which is slower than on the horizontal machine.

Fifth Method—Vertical Milling with Two Vises. Use two vises on a Vertical Machine. This method will be exactly like the previous one, except that we remove one piece and insert the next one, while the piece in the other vise is being milled. We find for

Fig. 176

No. 2 Vertical with 20" Circular Attachment, milling gray iron castings 2⅞" x 4½" at the rate of 220 per hour.

the complete cycle covering the two pieces the following, keeping in mind that the machine never needs to be stopped: Insert first piece 10 seconds, advance table to cutter 5 seconds, engage feed 1 second, mill 30 seconds; while milling, remove and insert piece in other vise; disengage feed 1 second, advance table 5 seconds, engage feed 1 second, mill second piece 30 seconds, disengage feed 1 second, advance table 3 seconds and start new cycle. Total time for two pieces 87 seconds, or time per piece 43½ seconds.

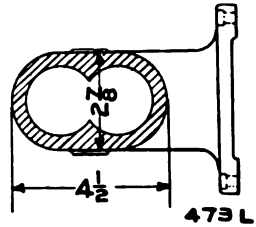

Fig. 176-A

The Relation of Face Milling to Using a Cutter on an Arbor. It will be noted that

we always put the piece in the vise or fixture with its broad side toward the cutter. This seems quite natural because the feed will then be along the short side; in other words, we will have to feed 2″ instead of 4″. There is absolutely no doubt about it that this is the quickest way when we use the horizontal machine and a spiral cutter, but when we use the vertical machine and an end mill, conditions have been changed and it may be well to analyze

Fig. 177

No. 2 Vertical Miller with 20″ circular attachment and special fixture milling sad irons 4″ x 6½″, ready for polishing, at the rate of 2 per minute.

this somewhat closer. Offering the broad side to the cutter requires a 4½″ cutter; offering the narrow side to the cutter requires only a 2½″ cutter. The 4½″ cutter requires an approach of 1¼″. Placing the piece with the narrow side to the cutter requires an approach of only ½″. The 2½″ cutter can run $^{9}/_{5}$ times as fast as the 4½″ cutter or 102 revolutions. Using the same feed of .120″ per revolution we get 12.24″ feed per minute. The length of cut on each piece is the approach of ½″ plus the length of 4″ or 4½″. The time for the cut will, therefore, be 22 seconds. All the other factors remain the same. The time for two pieces is, therefore, 71 seconds or 35½ seconds per

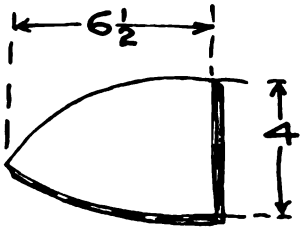

Fig. 178

piece, showing that it is actually more economical to mill the long way across this piece when using a Vertical Machine. This is better than the time required when using two vises on the horizontal machine. However, the gain due to the faster feed has been offset to a great extent by the greater travel required because of the diameter of the cutter.

Influence of Diameter of Face or End Mill. Figure 175 shows the relation of the 4½" diameter cutter to the work and also how the "approach" distance must be figured when estimating on face milling. When the cutter first touches the work its center is at A. When it has moved to B it will have covered the full width of the piece. In other words, it is necessary to travel from A to B to bring the cutter fully into the work. This is 1¼". In order to traverse the work completely the cutter must move from B to C, which is the same as the width of the piece, 2". The total travel therefore, is the width of the piece plus the "approach," or 3¼". The quality of finish required makes it advisable in many cases to continue the travel until the cutter has entirely cleared the work. If we wish to do this then the additional travel will be the width of the piece plus the distance DE, or 2" plus 1¼", or 3¼", making the total travel for milling the piece 6½". Because of the long "approach" and the long overtravel required on most work, face milling on a single piece like this is not economical even though it does permit of faster feeds.

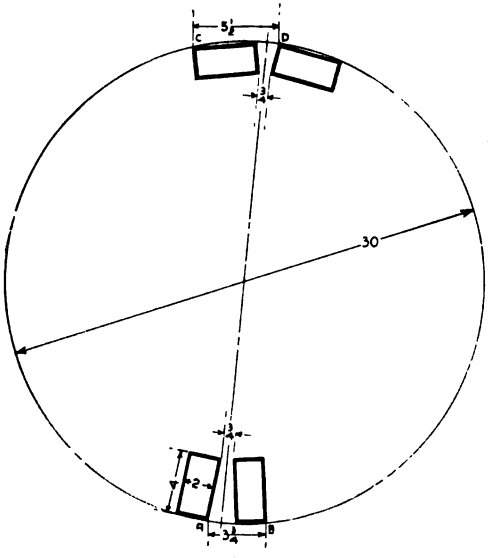

Fig. 179
Locating work in fixture for circular or continuous milling.

Continuous Vertical Milling. Still another method which might be employed for this piece would be to place a special fixture on a Circular Attachment somewhat like the illustrations, Fig. 176 or Fig. 177. With such an arrangement the

operator stands at the loading position and does nothing but take finished pieces out and put new pieces in, while the cutter mills some other piece. With such an arrangement there is no time lost. There are three possibilities: First, the operator removes and chucks a piece in the time in which a piece is completely milled, and both

Fig. 180

Continuous milling with hand operated fixture illustrating advantage of continuous milling when chucking time is longer than milling time. Done on No. 3 High-Power Miller with 20" Circular Attachment. Surfaces 1¾" x 4¾", cut ¼" deep; production 1¼ pieces per minute.

machine and operator are working to the maximum of their capacity. This represents the highest possible economy. The second possibility is that the milling takes longer than the chucking. In that case the machine works to its full capacity and the operator does as much useful work as he can. A third possibility is that the milling is done so rapidly that it is not possible for the operator to remove and insert a piece in the short time required to mill one. In that case it is necessary to slow down the feed until the milling is done slow enough to allow the operator to remove and chuck a piece while another piece is being milled. Even with this apparently perfect device there

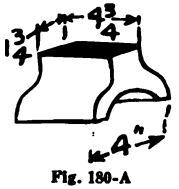

Fig. 180-A
Material, Steel.

is room for further study. There are various things which affect the time required to complete a piece, such as, for instance, the size of the cutter, the diameter of the holding fixture, the distance between the pieces in the holding fixture and even the way in which we place the pieces, whether lengthwise or crosswise. The space of this book forbids us to go into all these points in detail, but we will illustrate how the placing of the piece and the diameter of the fixture become elements of final economy.

Let us assume again that we want to mill a little bracket, 4″ x 2″, and that we employ a fixture bolted to the Circular Milling Attachment as shown in diagram, Fig. 179. The outside diameter of this device is 30″ and the piece is to be placed as shown at A and B. For the purpose of chucking we will allow ¾″ between the inner edges of the two adjacent pieces. In that case there is a distance of 3¾″ between the points A and B, so that the cutter has to travel 3¾″ in order to finish one piece complete. Assuming a 4½″ cutter and the same feeds and speeds as in the previous examples, we find that it takes 37 seconds to mill one piece. If we had placed them as shown at C and D of the diagram, again allowing ¾″ between two adjacent pieces for the purpose of chucking, we would find that there is a distance of 5½″ between the points C and D, and as we now use a 2½″ cutter, we would do the milling complete in 30 seconds. This shows how the placing of the piece in the fixture influences the time required. If we had chosen a fixture 18″ in diameter, then the distance between the points C and D would have been $6^1/_9$″ and the time per piece would have been 34 seconds. This shows how the diameter of the fixture influences the time, at least to a certain extent.

In many cases the time of chucking is considerably more than the time of milling. In all such cases an attempt should be made to do the milling continuously, because then all the time of milling is saved, and the time of the entire operation becomes merely the time required by the operator to do the chucking. In such a case it makes absolutely no difference how we do the milling, whether with a larger or smaller cutter, because we have to make the milling time sufficiently long to permit the operator to chuck a piece. Fig. 180 shows a case of this nature. Steel pole pieces for a self-starter are being milled. It will be noted that the surfaces to be milled have considerable idle space between them, but this is of no importance, as it takes the operator longer to chuck than it takes the cutter

to mill. It should be noted that in this case a pair of interlocking helical mills is used.

Automatic Clamping and Releasing Fixture. Sometimes it is practical to make a simple automatic clamping device part of the fixture, in which case the operator would do nothing except

Fig. 181

Continuous milling with an automatic clamping and releasing fixture. Pieces are produced at the rate of 20 per minute.

remove a milled piece and put a new piece in place, leaving the clamping to the fixture itself. Fig. 181 shows such a device. As the attachment rotates a hardened steel plate passing under a roller bears on the clamping device and holds the piece securely while it passes under the cutter. Shortly after it has passed the cutter the clamping is released, permitting the operator to remove the piece when it arrives at the loading posi-

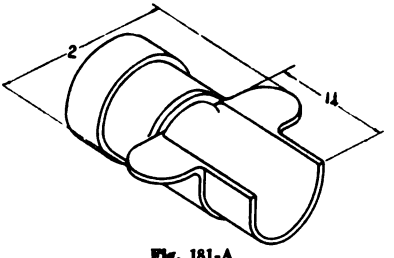

Fig. 181-A
Material, Brass.

tion. Under those conditions it takes more time to mill than to handle a piece and the total time becomes exceedingly short. The pieces shown in the illustration are regularly milled at the rate of 20 per minute. It will be seen that in this case the distance between two adjoining pieces is as short as it can be made and yet take care of the unavoidable variations in the size of the pieces. In other words, the cutter does not have to travel over idle spaces, and all the time consumed is actual cutting time.

It will be seen from the above that there is room for study as to the best method to be employed when milling, and that a great many points must be considered before reaching a conclusion. One of the main points to be considered at all times is the quantity of pieces to be handled, both the quantity of pieces to be made per year and also the quantity of pieces which are made in one lot. If a piece is made in such quantities that one operation keeps a machine constantly employed for months at a time it does not matter if it takes a few hours longer to set up the machine and fixture, but if the pieces come through in relatively small lots, requiring, say, only a day to mill, then it becomes necessary to select some method which requires only a short time to set up the machine, because all of the setting up time must be charged to this one lot; in other words, to one day's work. What would become a negligible time for several months' work, might become prohibitive for a day's work.

The above brief discussion shows clearly the importance of the careful selection of the PROPER METHOD OF MILLING.

CHAPTER XIII

MILLING JIGS AND FIXTURES*

The term "milling fixtures" may be understood to cover all devices used to hold work on the milling machine table in the proper position for milling operations. The term, however, does not, as generally understood, include the standard bolts, nuts, clamps, raising blocks, jacks, etc., that usually form part of the equipment of a milling department and are utilized indiscriminately for a variety of odd jobs.

Since the methods of milling are widely varied, it follows that there must be an equal variation in the construction of the fixtures, this being made still more apparent by the wide divergence in the size and character of the work that is handled by each one of the standard milling methods. It is consequently impossible in a chapter like this to do more than indicate the principles of fixture design and to give a few illustrations of typical examples. Before passing on to this, however, it will be proper to consider the subject of the fixture in conjunction with the method.

Classification According to Method: Rotary, square or reciprocating. In a previous chapter (Various Methods of Milling) we have discussed the selection of the method, this being done, however, solely with reference to the shape of the piece and the degree of accuracy and quality of finish required. No attempt was made to show the influence of quantity in this selection. Where large quantities of parts have to be machined it becomes less essential to take into account the questions of initial cost and maintenance cost of the fixture, but where a limited quantity of pieces are machined it will often be found necessary to decide between that method which would give the highest production, and that method which would give the highest production per unit of cost. For instance, the tool designer or time setter may be concerned with a piece which lends itself very conveniently to the rotary method; the piece could also be handled by the right angled or square method, and again by the reciprocating method. The production is greatest

*Most of the fixtures described in this chapter were designed by our Service Department for maximum production under the conditions prevailing in the customer's shop.

with the first named method and least with the last method. However, if there are not more than 100 pieces to be made in each lot and not more than 12 lots to be handled per year, the question of cost of equipment becomes important. Now, if we will assume that the rotary method produces the piece in one-third of a minute, the total time for the 100 lot will, of course, be 33.3 minutes. The square method produces the piece in one-half minute, giving a time of 50 minutes, and the reciprocating method in two-thirds of a minute, giving a time of 66.6 minutes per lot. Obviously, if we were considering continuous production, or even production of such quantities as would permit the machine to run for a week without changing the job, there could be no further thought given to the question of cost of initial equipment, or for that matter to the question of cost of upkeep. But under the conditions we have laid down we must in addition to the items above specified, consider the time taken in setting up. Here again we will use arbitrary figures. Setting up the rotary attachment, including the mounting of the circular table on the machine, connecting the rotary feed mechanism and mounting the fixture on the rotary attachment would consume 40 minutes;* for the square method of milling, which merely needs the setting of the fixture on the table, 20 minutes; and for the reciprocating method, 20 minutes also; so that it is apparent at once that there is no gain in the total time of the rotary method with its higher individual productivity as compared with the square method. Therefore, since the square method is the simpler of the two, from the standpoint of fixture design and cost, it would take precedence.

Comparing the square method with the reciprocating method we have a total time of 70 minutes as against the total time of 86.6 minutes. This repeated twelve times during the year would give us a balance in favor of the square method of 219 minutes, or approximately 3½ hours. We are, therefore, really only justified in spending 3½ hours more on the construction of the square fixture over and above that we would spend on the construction of the reciprocating fixture. All this again on the assumption that it is desired to make the fixtures pay for themselves in the course of a year. If a different standard is adopted, then this 3½ hours may increase to 7, 10½, or even 14 hours.

*The term "setting up" as above used is also understood to include the time taken for tearing down this apparatus and restoring the machine to its normal condition.

Skill of Workmen as a Factor. The above comparison deals only with the influence of the cost of the fixture on the selection of the method. In addition to this there is, of course, to be considered the question of how the skill of the available workmen affects the degree of complexity permissible in the fixture.

It is obvious that the simplest arrangement from the operator's point of view is the rotary method in which his functions are confined to those of releasing and removing finished work and inserting and clamping the unfinished work, so that here decision would tend towards the rotary method.

The next simplest method would be the reciprocating method, in which the table merely travels from left to right and from right to left. Here, in addition to his work-handling functions, he must exercise that of reversing the direction of the table feed and possibly moving the table a certain distance either through the hand or power quick return.

The square method calls for most in the way of the operator's activity, since he must continue to change the feeds so as to engage alternately the cross and longitudinal feed and must also remember to reverse such feeds every half cycle.

Maintenance Cost. Another item to be considered is the cost of maintenance or percentage of productive hours of the fixture. This must always be in favor of the simplest fixture no matter how carefully the design of the others be worked out. The above comparisons have been limited to three methods. No attention has been paid to the simple method of holding one piece in a simple vise-like fixture which would, in all probability, be the most suitable method to employ for a job that is run through in the quantities we have selected. It is largely because this method would be so obviously the correct one that we have omitted it from the comparisons, the only purpose of which is to indicate the different points to be watched in arriving at a correct decision as to the selection of methods.

Summarizing the above, therefore, and leaving the question of the simple fixture out of consideration, it appears that from the point of view of production the decision lies between the rotary and square methods. From the point of view of cost of fixture the decision favors the reciprocating method. The quality of help again favors the rotary method and the maintenance cost the reciprocating method. It is reasonably obvious that the simplest or reciprocating method wins most points in this contest and the fixture will probably be made along these lines.

It is, of course, understood that all of the foregoing analyses should properly be made by the time study department in conjunction with the fixture designing department.

Much of the matter discussed does not properly pertain to a discussion of fixtures. It has been found desirable, however, to insert it at this point, since there is really no exact point of severance between the tool designing and time setting departments. It will further be understood that immediately the quantities that have been used in the above illustration shall change, they being made larger or smaller, a completely changed set of figures have to be considered which will probably lead to entirely different conclusions.

Apart from the classifications of fixtures according to methods, there is an additional classification that can be made between those fixtures which must locate the work with reference to a cast surface, either plain, bosses or cores, and those which must locate the work from some surface or surfaces previously machined, these surfaces again being either plain, circular or formed. Still another classification may be made between those fixtures which are concerned only with the production of one surface at an operation and so call for no relative motion between the work and the table and those which must produce two or more separate surfaces, or else a continuation of the first surface either with gaps or projections between. There is still another classification which is that of fixtures in which the feeding mechanism is contained in the fixture, the milling machine table itself merely being regarded as a means for the preliminary adjustments between cutter and work.

In addition to these classifications there must be considered the question of the capacity of the machine. It may very well happen that the limitations of power in the machine are such as to render the chucking time a very negligible portion of the total time consumed, so that if the operation is scheduled for such a low-power miller, a different method of chucking the work will be used than that which would be proper if a powerful machine with adequate feeding facilities were employed. Of course, under ideal conditions, the power of the machine should always be sufficient to feed the work past the cutter at a rate governed only by the ability of the work to withstand the feed pressure, or by the degree of finish that is required. The next governing factor may be the ability of the cutter to withstand these strains, but outside of these factors there ought to be no limitation imposed on productive milling through any weakness of the machine.

Axioms for the Fixture Designer. There are, however, in all these classifications certain well-defined principles, most of which are concerned with adequately clamping and supporting the work. Stating these in the form of axioms, since they are mostly self-evident, we have:

FIRST. The clamp should be immediately above the supporting point.

NOTE—Disregard of this leads to springing of the work, or lifting of the work due to support point being transformed into a fulcrum.

SECOND. Three fixed supporting points should be the maximum for any rough surfaces.

THIRD. Supporting points for finished surfaces should be as small in area as is consistent with the pressure to be exerted by the clamps.

FOURTH. All supporting points should be set as far apart as the nature of the work will allow.

FIFTH. All side clamps should be arranged to press downward.

SIXTH. The fixed supporting points should always circumscribe the center of gravity of the work.

SEVENTH. All supporting points over and above the original three should be sensitive in their adjustment.

EIGHTH. All clamps and adjusting supports should be operated from the front of the fixture.

NINTH. All clamps and support points that are operated or locked by wrench should have the same size head.

TENTH. Support points should be set so high above the body of the fixture as to minimize the amount of cleaning required.

ELEVENTH. Support points should have provision for easy removing and replacing in the event of breakage.

TWELFTH. Fixed support points should have provision for adjustments to take care of variations in castings from time to time.

THIRTEENTH. Clamps should be arranged so that they can be easily withdrawn from the work.

NOTE—This is to avoid lengthy unscrewing of the nut in order to give ample clearance between clamp and work.

FOURTEENTH. Springs should be used to hold clamp up against clamping nut.

NOTE—This is to avoid the falling down of the clamp and the consequent loss of time attendant on holding it up while inserting the work beneath.

FIFTEENTH. Supporting points and clamps to be accessible to the operator's hand and eye.

SIXTEENTH. Adequate provision for taking up end thrust so that this will not be dependent upon friction between work and clamp.

All of the above axioms are applicable to almost every type of fixture.

As an example of some of the axioms Fig. 182 is of interest. This does not show a fixture, but does show a built-up construction of clamps, supports and blocks for an experimental cut. It will be noted that the projecting arms AA of the work have a solid support B between the lower arm and the table; also C between the upper and lower arms; that the clamps D are set so that their pressure is directly over the supports and that the distance from the clamping bolt to the fulcrum is from three to four times the distance from the bolt to the point of clamping. It is, of course, just as important to observe these principles in temporary set-ups as it is in the design of the finished fixture.

The other desiderata for good fixture design may be summarized as follows:

First: Rapidity of Clamping. The majority of fixtures employ for holding mechanism, standard clamps secured with screws or nuts. To facilitate the insertion and removing of the work, the clamps may be provided with a slot so they can be easily slid back and forth. The hole in the clamp may be large enough to pass around the nut so that a split washer used in conjunction enables the clamp to be immediately removed as soon as the nut has been slightly slackened. In certain cases, particularly where a projecting boss has to be clamped, the swinging of the clamp around the clamping stud through 90° often provides sufficient clearance. This swinging movement should be controlled by a pin set in the clamping bolt and a 90° segment milled around the hole through which the clamping bolt passes. When the quantities justify the added expense the screws should be replaced by cams, which can, of course, be designed to give an instantaneous release with sufficient space for easy withdrawal of the work, all in conjunction with a very firm gripping effect. Again when it is desired to operate several clamping points simultaneously, compressed air can very well be used. This system has the merit not only of rapid and simultaneous clamping all around the fixture, but does away with the possibilities of lifting

the work from its supports due to undue pressure being exerted at any one point. It can also be so regulated as to give a certain desired pressure sufficient to hold the work and need not be sufficient to create any distortion.

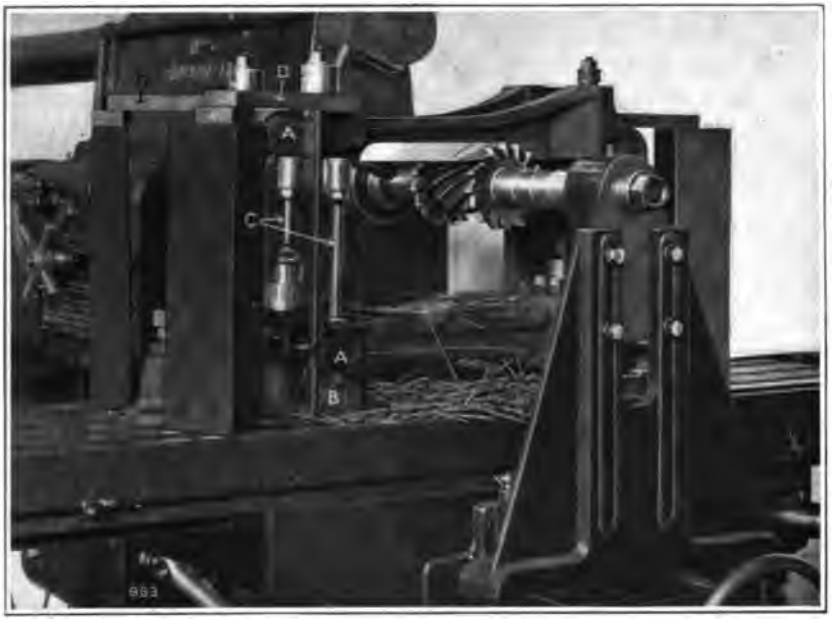

Fig. 182

No. 5 High-Power Miller with improvised holding devices finishing cast steel passenger car axle housing. Cutters 6" and 4" diameter, 32 revolutions, feed 4¼" per minute.

Second: Accessibility for Inserting and Removing Work. This point must, of course, be watched in all fixture design, but it is particularly important where the production is governed solely by the chucking time, as in practically all rotary and most reciprocating jobs, or when the operation consists of the rapid milling of a small surface in a comparatively large and hard-to-handle casting. It is not easy to give any particular indications as to how this end is to be achieved since the conditions will vary with almost every piece.

Third: Generous Ducts for the Escape of Chips and Lubricant. There are two functions served by the proper observance of this rule; first, the lessening of the time required to clean the fixture after the work has been removed, which, of course, directly influences production; and secondly, the elimination of

the danger attendant upon chips remaining on the locating surfaces on which the work rests, which, of course, would throw the work out of its proper chucking position, and where the location is from a previously finished surface would result in spoiled work.

Fourth: Removal of the Clamping and Supporting Members from the Cutter Zone. The great thing to be considered in this is, of course, the safety of the operator. One of the great reasons why the Automatic type of machine has met with so much success is, that due to the automatic quick return from, and traverse to the cutter, the work can be handled at a very safe distance from the cutting teeth. This principle should be observed in all jig design, whether used on Automatic or Knee and Column machines, and, if necessary, extension handles should be provided so that the operator's hand never approaches near the cutter. When a string fixture is used it is often desirable to have a space between the first and second pieces considerably greater than is required for the actual dimensions of the job, in order that the act of chucking the second piece can be accomplished with greater safety. Here again the exact proportions must be worked out, having in mind the length of time required for the chucking and cutting operations, the ideal conditions being reached when the operator's maximum chucking and removing effort consumes a time equal to that required to take the cut over the complete number of pieces in the fixture.

Another item to be considered in this connection is the lessened danger of the cutter striking the hardened clamps or nuts, which results either in breaking or dulling the teeth.

Fifth: Elimination of Clamping Strains from Table of Machine and Absorption of Same in Fixture. While there are certain cases where it is not always proper to follow out this rule, yet it is in a great majority of cases very applicable. Milling Machine tables, by virtue of their necessarily shallow section, are not well fitted to withstand the buckling strains that can be set up by clamping. It must be remembered that even the heavy table of a planer can be buckled by clamping work to it. Such strains being constantly transmitted will ultimately result in the distortion of either the T-slots or true plane of the table, both of which conditions immediately affect the accuracy of the work produced. The fixture should, therefore, be designed with sufficient depth to withstand and absorb all the clamping strains. This frequently, and in fact, generally, means that the base of the fixture should be of a box section. Those

fixtures which consist of a single flat plate with a number of projecting bosses can not be regarded as representing the best practice. There are, of course, exceptions such as, where the bosses which project a good deal above the base of the fixture, provide in themselves a supporting place for the heel of the clamp, for the clamping screw and for the supporting screw on which the piece rests.

Sixth: Provision of Mass in Excess of Necessary Rigidity to Absorb Chatter. As has been mentioned in an earlier chapter, the milling cutter is the factor which inherently sets up chatter

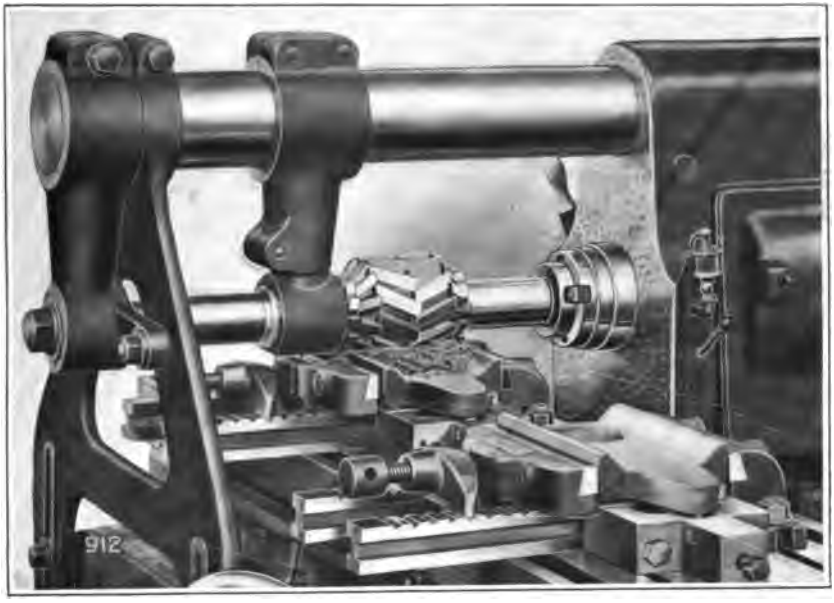

Fig. 183

No. 4 High-Power Miller with two All-Steel Vises used as tandem fixtures: Gripping rough castings for a cut 7" wide, $\frac{1}{4}$" deep with cutters 6" diameter, 42 revolutions, 12.6" feed. Milling time, roughing and finishing, including two chuckings, 6 minutes per piece.

conditions due to the fact that the chip, which theoretically starts with a zero thickness, ends up with a maximum according to the amount of traverse of the table during the passage of the tooth through the work. Since there is no possibility of the cutter biting into the work at the commencement of such a stroke, there must be a wedging-apart action between tooth and work, which has been found to be one of the main causes of chatter. It is, perhaps, proper to say that chatter exists in almost every milling job. Where the

fixture is just strong enough to withstand the feed pressures and cutter pressures, the chatter is likely to be accentuated. If the fixture be from four to five times as heavy as is really necessary, much of this chatter will be absorbed. There is no reason other than that connected with the cost of the cast iron in the fixture, why a milling

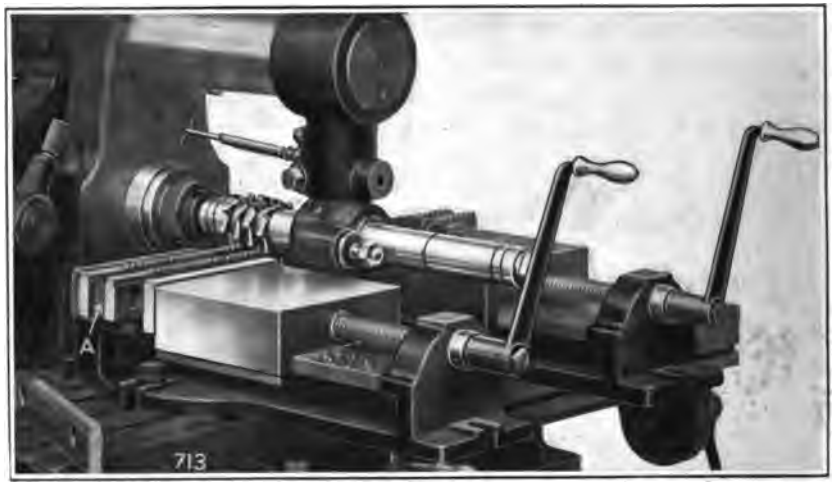

Fig. 184

No. 2 Plain Cone-Driven Miller cutting recesses 3/8" deep, 1/8" wide on both sides of two .60 carbon steel bars. Two vises in tandem, each hold two bars, 11¾" long, ⅝" thick. Cutters 3½" diameter, 50 revolutions, .068" (3.4" per minute) feed. Time per piece 2.2 minutes.

fixture may not be very heavy, since there is but seldom any vertical adjusting or handling of the fixture which throws a muscular strain on the operator. The difference between drilling jigs and milling fixtures in this respect is very marked and the tool designer must approach the design of a milling fixture with an entirely different conception of proportions than he would use in connection with a drill jig. It is impossible to over-emphasize the need for extra weight in all milling fixture bodies.

Now, if we keep all the above factors in mind, we can then consider the different types of fixture in more detail.

Vises Used as Fixtures. Wherever possible we should, of course, use standard equipment. To this end it very frequently happens that one or a pair of standard vises can be utilized to good advantage. Fig. 183 shows the use of two Cincinnati All-Steel Vises which, with the addition of supporting blocks laid on each side,

form a highly efficient pair of fixtures for this particular operation. It will be noted that these vises having a swiveling, movable jaw, adapt themselves easily to the irregularities of the casting, and further, that the jaw plates being angled at the back, tend to pull the work down firmly on the fixed supporting points, which it will be noted are as close to the clamping points as is possible. The additional adjustable supporting point is brought out to the extreme

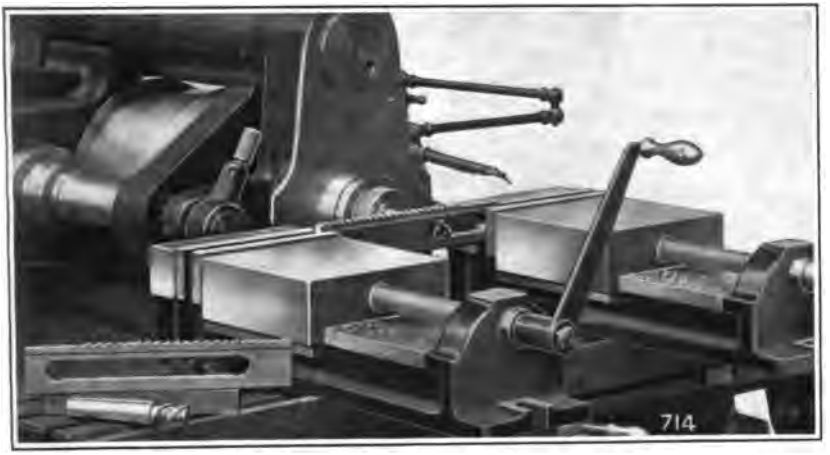

Fig. 185

No. 2 Plain Cone-Driven Miller cutting slots 1″ wide, 9″ long, into .60 carbon steel bars, ⅝″ thick at one cut with helical end mill, 160 revolutions, feed .015″ (2.4″ per minute) roughing, .068 (10.8″) finishing. Time for two cuts, two chuckings, per piece, complete, 7½ minutes.

end of the piece. In the manufacture of rifles, typewriters, adding machines and similar parts, very great use is made of a standard vise fixture, this fixture being provided with false removable jaws which are made to suit the contour of the piece to be held. Such vises are usually provided with a cam movement for rapidly opening and closing the vise jaws, which movement also gives the maximum of gripping effect at the conclusion of the stroke.

An example of the use of the machine vise is found in Fig. 184, which illustrates the use of two plain cast-iron vises with plain jaws, holding in each vise two tamp racks. In this case a spacing block A is used. It is loosely attached to the vise to prevent its being mislaid, or tend to work over into the position occupied by the work. This arrangement is, of course, applicable only to work that comes within reasonably fine limits of parallelism and thickness. The use of two vises permits of the removal of the work

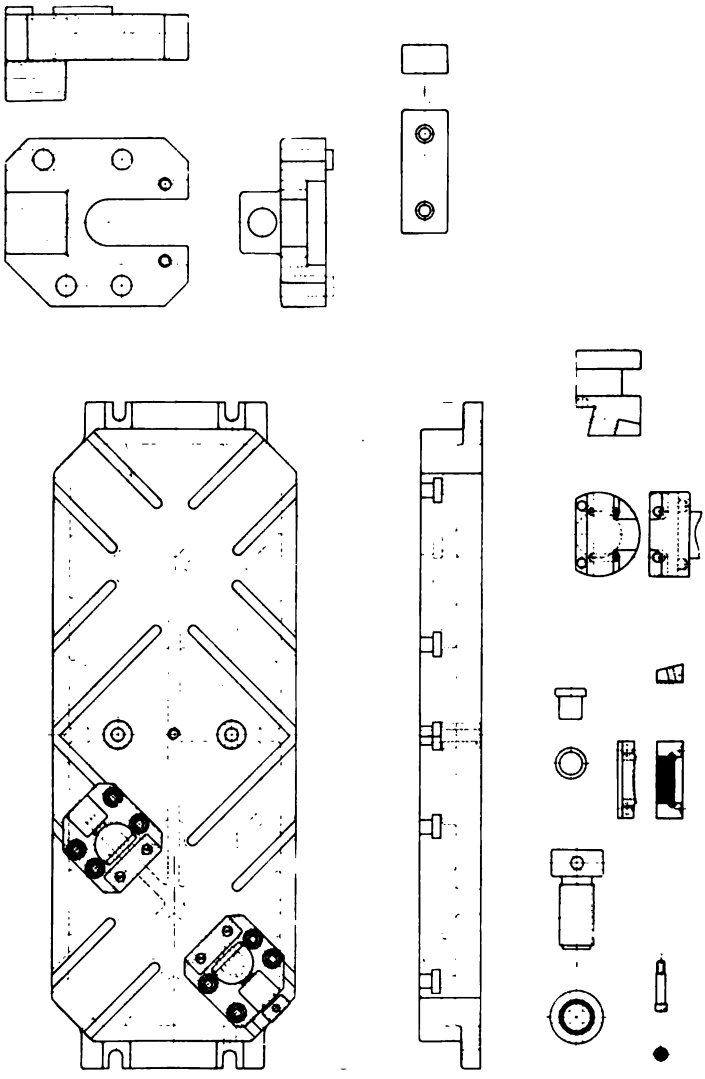

Fig. 186

from the one vise while cutting takes place on the other and in conjunction with an elevating movement of the knee, also allows of the insertion of unfinished work in the same vise, thereby giving a continuous milling operation. Fig. 185 shows the same two vises, each of which grips one end of the same plate in which it is desired to mill a slot. There is nothing that could be devised for this particular job that would be more efficient and at the same time less costly.

In addition to the use of vises, a standard fixture can be designed on which there are a number of adjustable jaws, which jaws may in turn be moved from point to point on the main or base plate of the fixture, so that the one fixture could easily be adapted to hold quite a large variety of pieces, both as to dimensions and shape. The details of such a fixture are seen in Fig. 186.

Standard Parts of Fixtures. While on the subject of a standard fixture, it is proper to look at what may be regarded as standard constructions. There are but few of these, since conditions vary so largely in milling fixture design and it has seldom been found practical to carry in stock a number of such standard parts as may very well be done in connection with the designing of drill jigs. However, the use of certain well-defined types even though differing in dimensions can be advantageously followed and we will discuss a few of these types.

SUPPORT PINS. These are of two types—Fixed and Adjustable. The Fixed Support Pins when used in conjunction with a finished surface may generally be as Fig. 187, consisting of a flat-headed shoulder screw, having a hardened head, the top of which head may be surface-ground when in position. No adjustment need be provided. When used for supporting rough castings, a good construction is that shown in Fig. 188, consisting of a screw with hexagon head and rounded top, tapped into the body of the fixture and provided with a lock nut so that the points may be elevated or lowered according to the variation in the castings.

Adjustable Support Points may be divided into two classifications: those that are brought into contact with the work through a spring and those which are hand-actuated. The first of these is shown in Fig. 189 and consists of a plunger which rests on a compression spring. Its vertical movement is limited by the point of a screw which projects over into a slot cut in the plunger. This prevents the spring from pushing the plunger far out of the fixture

and is also a preventive against the plunger being lost when the fixture is in, or being transported to the toolroom. The plunger is clamped in position by either a sleeve directly operated on by a screw, or by a split sleeve, both halves of which are pulled together with a screw, the first of these methods being shown in the illustration. It will be evident that in both methods of clamping the support is entirely dependent upon the friction between the side of the plunger and the clamping member. For heavy work or work where a jarring effect is produced, it is desirable to have a more solid form of adjustable support. A standard construction for this is shown in Fig. 190, and consists of a vertical plunger guided and restricted in its movement by the point of a screw and having its lower end beveled at an angle of 45°. This end rests on a similar surface on the end of a horizontal sliding plunger which is moved forward by a screw in the fixture. This construction has the merit of being cheap, simple and self-locking. It is not usually considered desirable to put a spring on this plunger to force it down when the adjusting screw is released. It is rather better to rely upon the operator forcing the plunger down with his finger, which operation insures the cleanliness of the top of the supporting point.

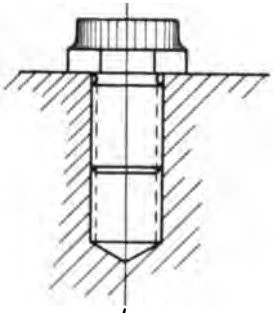

Fig. 187

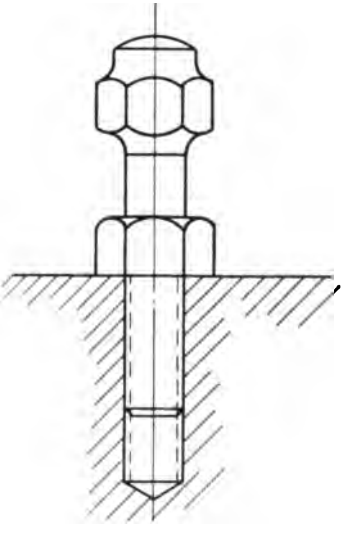

Fig. 188

CLAMPS. The standard constructions of these can again be divided into two types: those which press the work directly down on to the supporting member and those which hold by a side pressure, as in the case of vise jaws. The general principles of clamps have been touched on, on page 202, and the illustrations here given

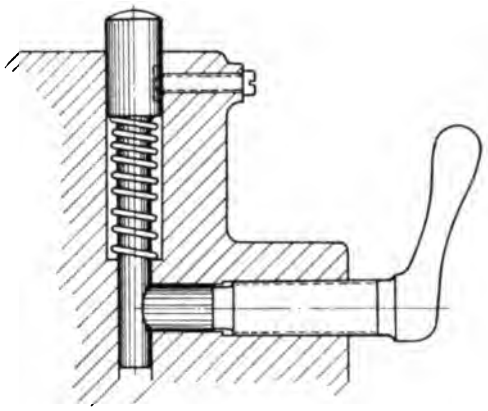

Fig. 189

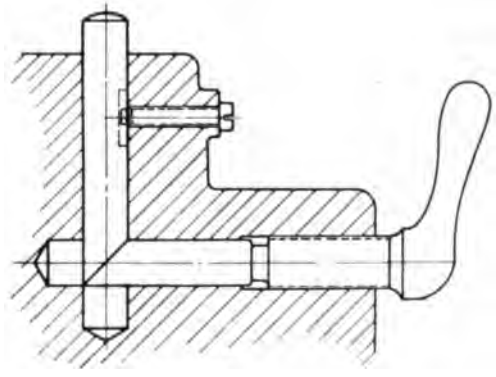

Fig. 190

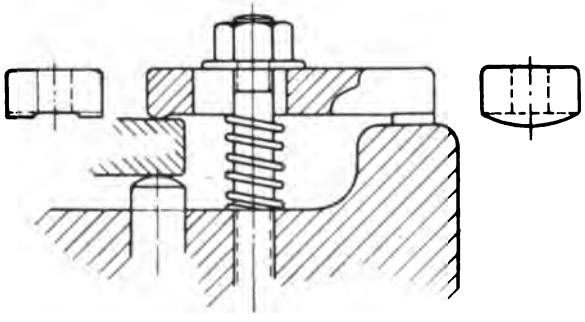

Fig. 191

clearly show the application of some of these principles. The simplest form of Slotted Clamp, Fig. 191, is provided with a round heel and beveled gripping portion. The rounding of the heel is so that the clamp may adjust itself on a three-point bearing, two of these points being on the work, the third on the supporting part of the fixture. Theoretically, such a clamp should be used in conjunction with a ball washer, but practically the ordinary flat washer serves.

The Swiveling Clamp, Fig. 192, having the same gripping portion and heel is restricted in its swinging by the pin shown in the clamping stud.

The Swinging Clamp, Fig. 193, is used only when the work is so large and unwieldy as to require a good deal more space for insertion than is usually necessary. This construction consists of a clamp swinging around a horizontal axis having provision at the gripping end for a one-point contact only, and since its plane of swinging is fixed, the clamping bolt swings into the clamp from the side so that when the clamp is released the bolt falls down below the work and the clamp is swung back entirely behind the pivot.

The Cam, Fig. 194, has an angled surface, and in the one movement effects three pressures; it tends to force the work down on to the support over against the side stop and up against the end stop.

Clamps which hold by gripping the work sidewise are shown in Figs. 195 and 196. The heel of the clamp is angled so that the gripping of the piece tends also to pull it down on to the supporting points. It is usually desirable to serrate or file-cut the gripping surfaces and the hole must, of course, be slotted in order to allow of slight vertical adjustment. The heel is again rounded and a compression spring provided to keep the heel of the clamp up against the undercut surface of the fixture.

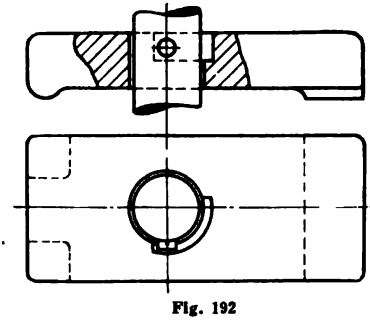

Fig. 192

The simplest and one of the most satisfactory standard forms of Side Clamp is shown in Fig. 196 and consists of a simple screw having a hardened, pointed end, said screw being set to point downward to an angle of approximately 5°, so that its advance also produces a downward pressure. This, of course, puts certain

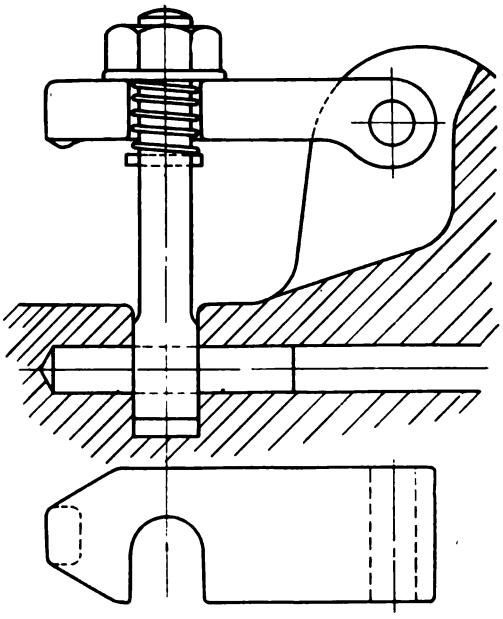

Fig. 193

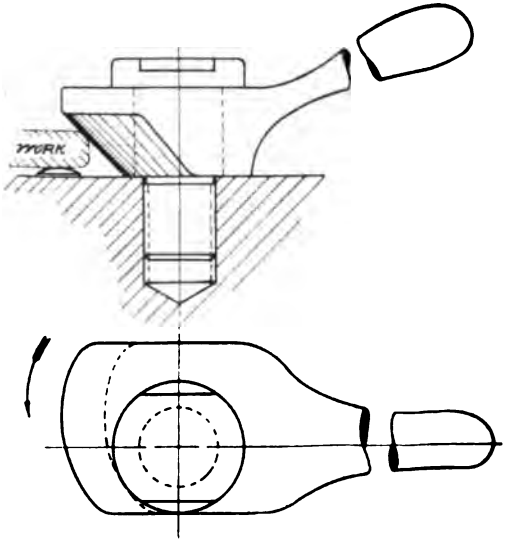

Fig. 194

indentations in the work, but where these are not objectionable this form of clamping has much to commend it on the score of simplicity and strength.

FOR SIDE LOCATIONS there are practically no standard constructions. The usual practice is to press the work against flat or pointed screw heads. Sometimes it is desired to locate from some surface in conjunction with a boss, in which case flags may be utilized. The flag consists of a swinging member, the end of which terminates in a profile which agrees with the boss from which it is desired to locate. After the work has been chucked in the fixture the flag is swung into position over the boss, and the operator by means of various screws and clamps, wedges the work over until the flag and boss are in agreement. A good example of this is shown in Fig. 197. In other cases the location must be from the surface that is to be machined, so that the locating member must be removed before the cutter passes over the work. A comparatively simple way of doing this, shown in Fig. 198, entails the use of a bracket having either a formed locating piece or two screws which may be set in any desired plane. This bracket can be slid along the front of the fixture so that the work having been lined up by it will be left free for the cutter when the bracket has been slid to the next piece, or out to the end of the fixture. There is with this construction, of course, the danger that the operator may forget to remove his locating piece, and for certain high-production jobs a method similar to that shown in Fig. 199 can be followed.

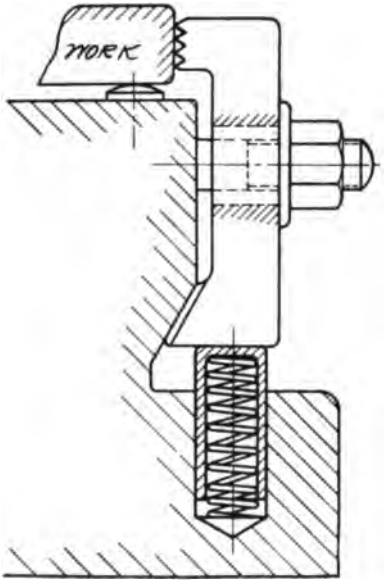

Fig. 195

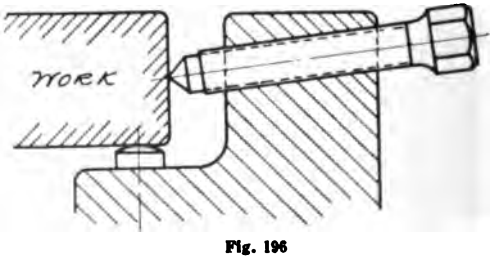

Fig. 196

The fixture is so arranged that the side locating points are automatically removed from the path of the cutter by the advance of the table. The illustration shows the details of this construction. A pair of swing brackets, A, carrying the locating point proper, are

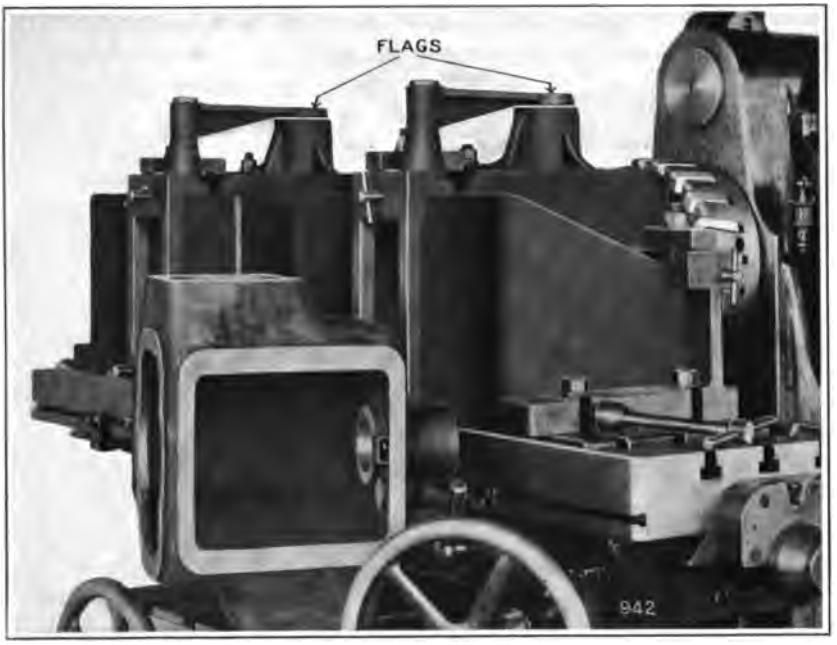

Fig. 197

No. 4 Plain Miller with tandem fixture and 12" diameter face mill, 26 revolutions, feeding 20" per minute, finishing the 13" x 11" surface of a cast-iron crank case in 2.6 minutes.

caused to rotate around the pivot by the movement of the plungers B, which are in turn actuated by the cam C that is fastened to the stationary headstock.

SETTING PIECES are often used in milling fixtures to insure the proper relationship between the machined surface and some other rough or previously machined part. These setting pieces may be divided into those that are hardened and placed in such a position as to be entirely free from the action of the cutter, and those which are soft and can not be so placed. The first type is well illustrated in Fig. 200, which shows a large angle bracket fixture carrying a casting which is to be operated on by a comparatively complicated gang. On the face of this angle bracket and well removed from the

cutters will be noted two hardened gauges, A, having one flat and one angular side. These correspond with the important surfaces to be machined.

In setting up a job the cutters are placed on the arbor and the fixture brought up so that the cutters are between the setting points, pieces of tissue* paper being used to determine their proximity. The cutters being set in the proper relationship, the table is moved back

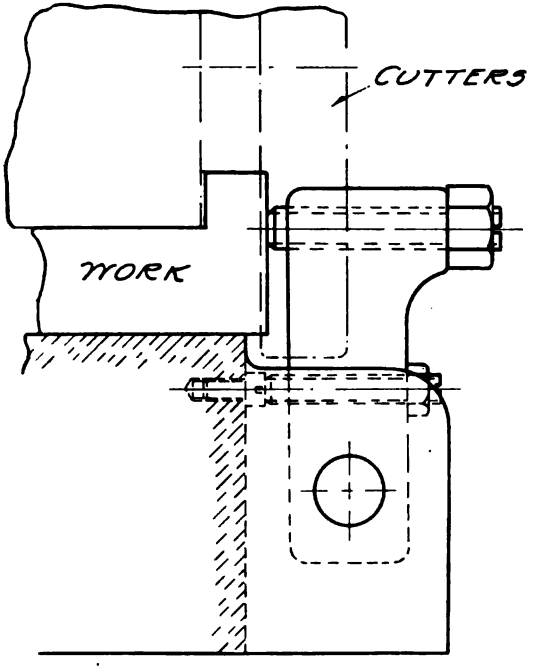

Fig. 198

to the chucking position, the work inserted and the pieces all milled. It is possible for the operator to test the continued accuracy of alignment at any time by simply repeating this process. It is not, of course, intended that he should do this for each piece.

The other type of setting piece shown in Fig. 201 is based on the use of a soft steel piece, A, fastened to the end of the fixture and having stamped on its surface a dimension, which dimension is supposed to be measured by the toolkeeping department as soon as the fixture is turned in after use. If by any accident, the setting

*In our own practice the gauges or setting points are made .010" undersize, and a .010" steel thickness gauge is used instead of tissue paper.

piece has been damaged by the cutters, it is a simple matter to replace the same and to always secure exact duplication. (B is a swinging gauge for testing the piece before it is removed from the fixture.)

This latter method is to be recommended more where the cutters are delicate and liable, on account of the nature of the job, to be brought in contact with the setting piece and also where the setting piece itself is comparatively difficult to reproduce as a hardened unit.

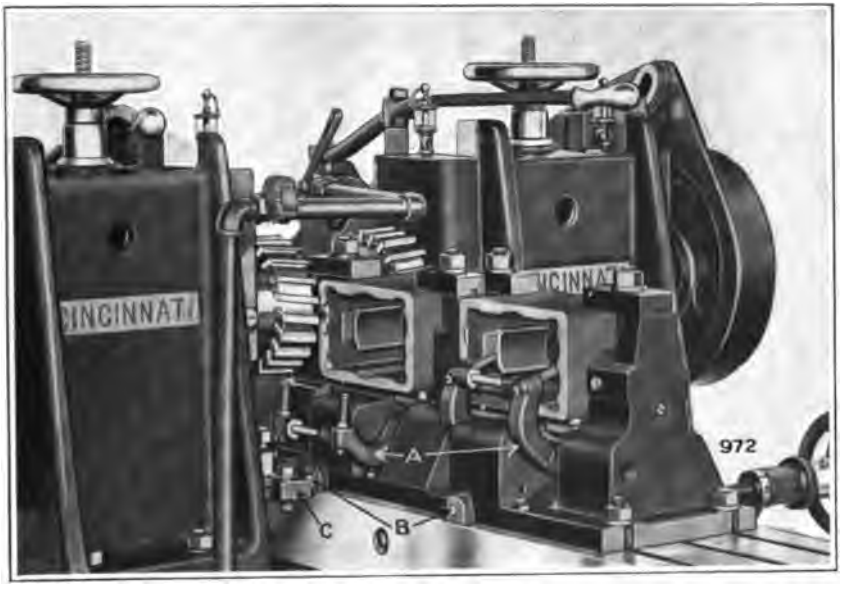

Fig. 199

Duplex Miller facing two ends of starter frames. Face mills 7½″ diameter, 41 revolutions. Material, steel castings. Feed 4″ per minute, quick forward and reverse 100″ per minute. Accuracy for parallelism plus or minus .002″. Time per piece 3½ minutes.

Simple Fixture for One Piece. Passing then to the more specific types of fixtures, we will first consider the simple fixture designed to hold one piece for use either on a Horizontal or Vertical Milling Machine, an adequate illustration being found in Fig. 202 and detailed in Fig. 203. It will be noted that the work rests on three fixed screw heads and is supported at intervals by additional adjustable points. The supporting points and side clamping screws are all of the standard types described above and prove adequate to hold the work under a heavy roughing feed of 20″ per minute. After the surfaces have been roughed and the side clamping screws slightly slackened up to release the bowing effect attendant on the

side pressure, the finishing cut is taken at the same feed, resulting in a very flat surface with a degree of smoothness sufficient to meet the requirements. This fixture is of about as simple a construction as can be evolved for such a job as that illustrated.

Tandem Fixtures, String Jigs. Following the simple fixture to hold one piece only, comes either two such fixtures set in tandem

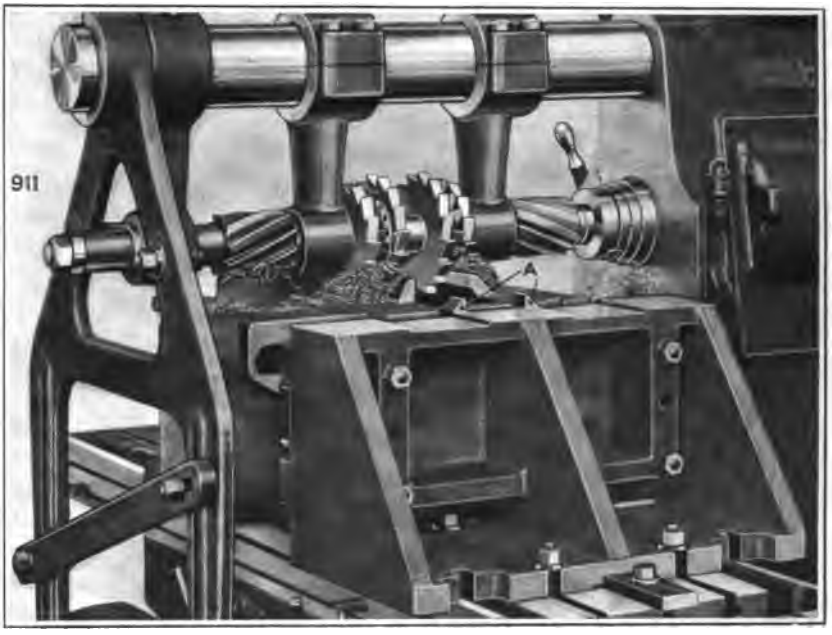

Fig. 200

No. 5 High-Power Miller. Largest cutters 8" diameter, 35 revolutions. Cut 6½" wide, $\frac{1}{4}$" deep. Feed 6½" per minute. Piece, cast iron, 18" long. Time for the cut 3½ minutes.

for either gang or reciprocal milling, or a string fixture which accomplishes the same results. Fig. 204 illustrates such a fixture arranged to hold six pieces. In this case the work rests on two fixed points, A, and on two additional points, B, which are carried on each end of a lever so that the depression of one end of the lever results in an elevation of the other end and a consequent automatic lining up of all four support points in one plane. This does away with the need for individual adjustment of the fourth support point for each piece and is made possible largely by the rectangular shape of the piece and the even distribution of the cut. The details of this device are shown in Fig. 205. All three pieces at each end of the fixture

are clamped by the one cam lever, C, which first brings over the clamp D nearest to the central fixed portion, E, of the fixture, following up with the closing of the second clamp, F, and finally with the end clamp, G, which it will be noted is made very much heavier than the intermediate clamps, since this end clamp must

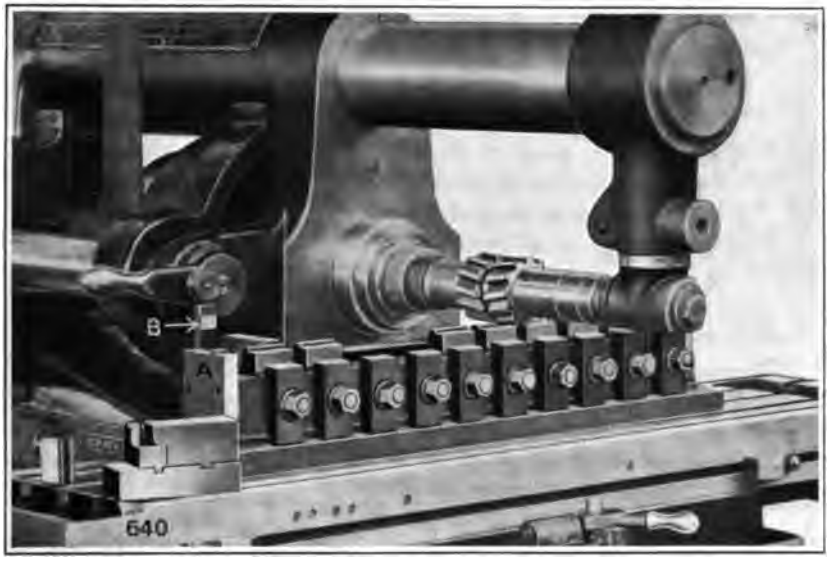

Fig. 201

No. 2 Plain Cone-Driven Miller with string jig finishing steel machine parts 1¾″ long, 1⅛″ wide at 73 feet cutting speed, .033″ feed per revolution (3.1″ per minute) in $\frac{7}{10}$ minute each.

take the whole of the feed pressure. It will be noted further that the arrangement of the clamps is such that their continued forward movement results in a downward pressure. This point must be continually watched and has been emphasized in axiom 5, page 201. Attention is also drawn to the provision for taking care of any lack of parallelism in the piece to be clamped. In Fig. 205 the details of the swinging clamp show that on one side it is provided with two gripping edges and on the other side with one edge only. The piece is therefore held between three points so that its lack of parallelism has no effect on the piece behind. The same result is sometimes obtained through side clamps of the construction shown in Fig. 195, which have their heel or fulcrum arranged so that an advance along the line of the clamp bolt is accomplished by a downward movement along the inclined plane.

It is, of course, understood that either of the fixtures above described can be used equally well on a Vertical or Horizontal Machine and no attempt will be made in this chapter to differentiate between the use of different types of machines.

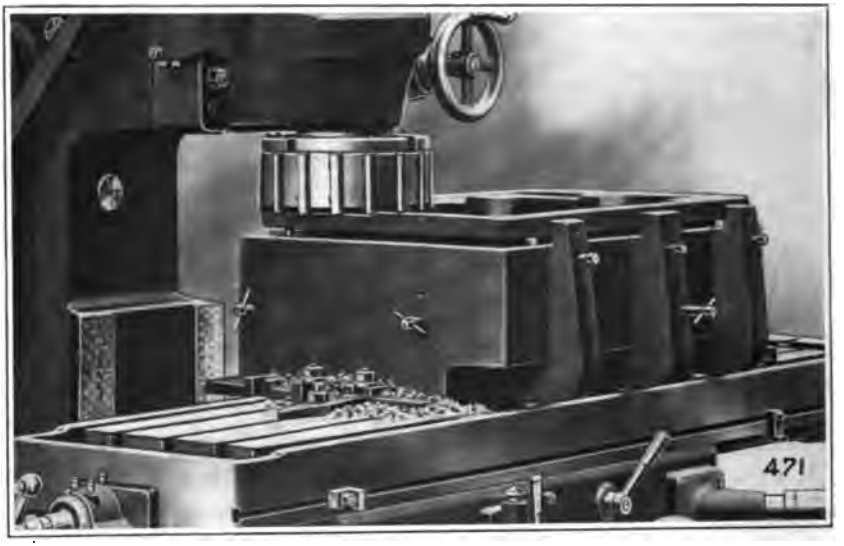

Fig. 202

No. 4 Vertical Miller milling the periphery of a rectangle 18¼" x 26½" without stopping either feed or speed, and without leaving an offset where the cut ends. Roughing cut ⅛" deep, feed 20" per minute. Finishing cut 20" per minute. Total cutting time 9 minutes.

The first of the illustrations given above refers to a fixture that may be used either singly or in tandem with the feed pressure in the same direction. It can equally well be used for a reciprocating job, except that in such a case it would be desirable to put the fixed stop for receiving the cutter or feed thrust on the other side of the fixture so that the left-hand fixture when feeding towards the right would take the feed pressure on the solid stop on the left-hand end of the fixture and the right-hand fixture when feeding towards the left would take its thrust on the fixed stop located on the right-hand side. It will then be seen that with the exception of the location of the end stop, the fixtures for individual gang or reciprocal milling may be the same.

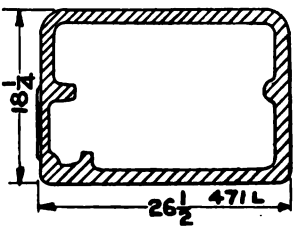

Fig. 202-A

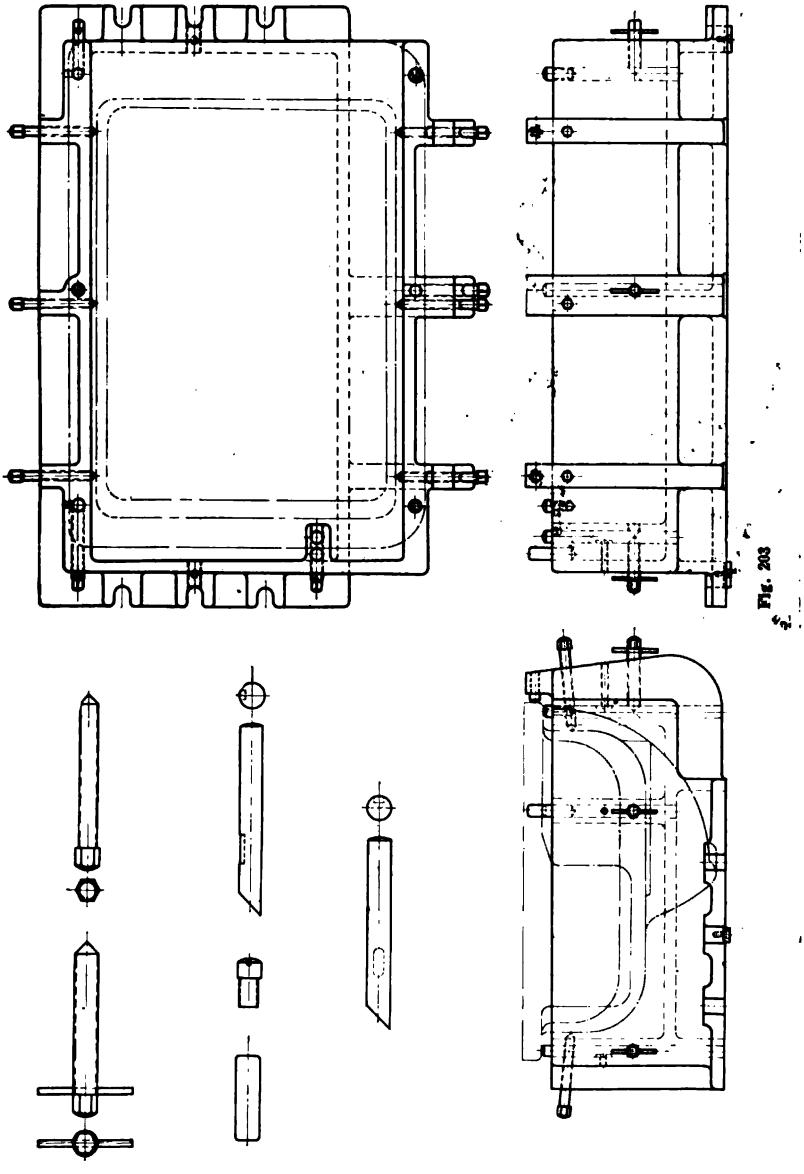

Fig. 203

Loading Fixtures. In certain limited fields the loading fixture can be very advantageously employed. Particularly is this the case where the length of cut or time taken for the cut is extremely short, and where the chucking of the piece consumes a very large proportion of the total time. In such cases a pair of fixtures can be used, one of them being on the table of the milling machine, the

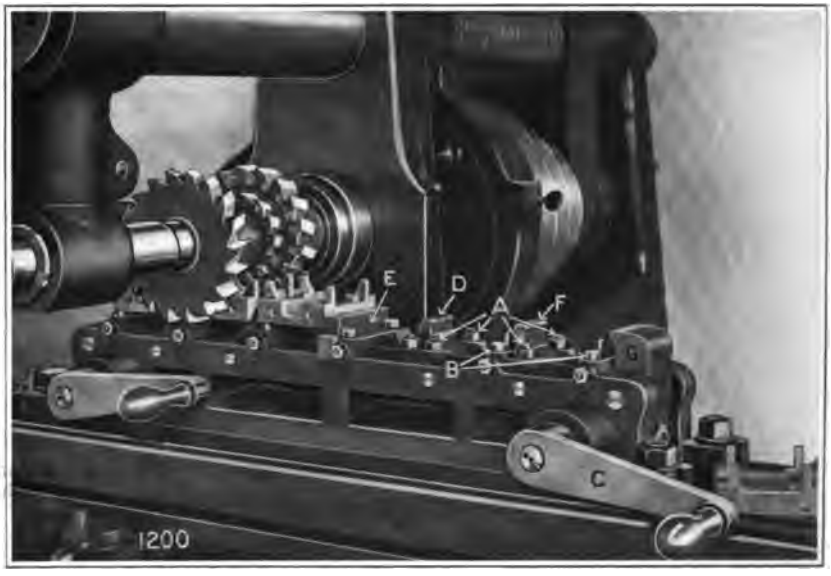

Fig. 204

No. 2 Plain Cone-Driven Miller with tandem multiple clamping fixture, milling aluminum magneto bases. Largest cutters 4½" diameter, 236 revolutions, feed .071" (16¾" per minute). Production 3 to 4 pieces per minute.

other on a convenient bench where either the operator or a helper can be removing the finished and inserting fresh, unfinished pieces. Fig. 205-A shows an arrangement for milling spark plugs in which this method is utilized. There are two work holders, each provided with a number of collets for gripping an individual piece. The work holder proper takes care of 37 plugs. The plugs are chucked in the fixture which is lifted to the table, dropped over a locating pivot attached to the table and clamped with bolts sliding in the T slots. It is located accurately by means of a plunger fitting between the sides of the T slots and sliding in a bush carried in the fixture. The work is then milled, indexed through 60° by means of other bushings in which the plunger fits and then re-indexed, making three

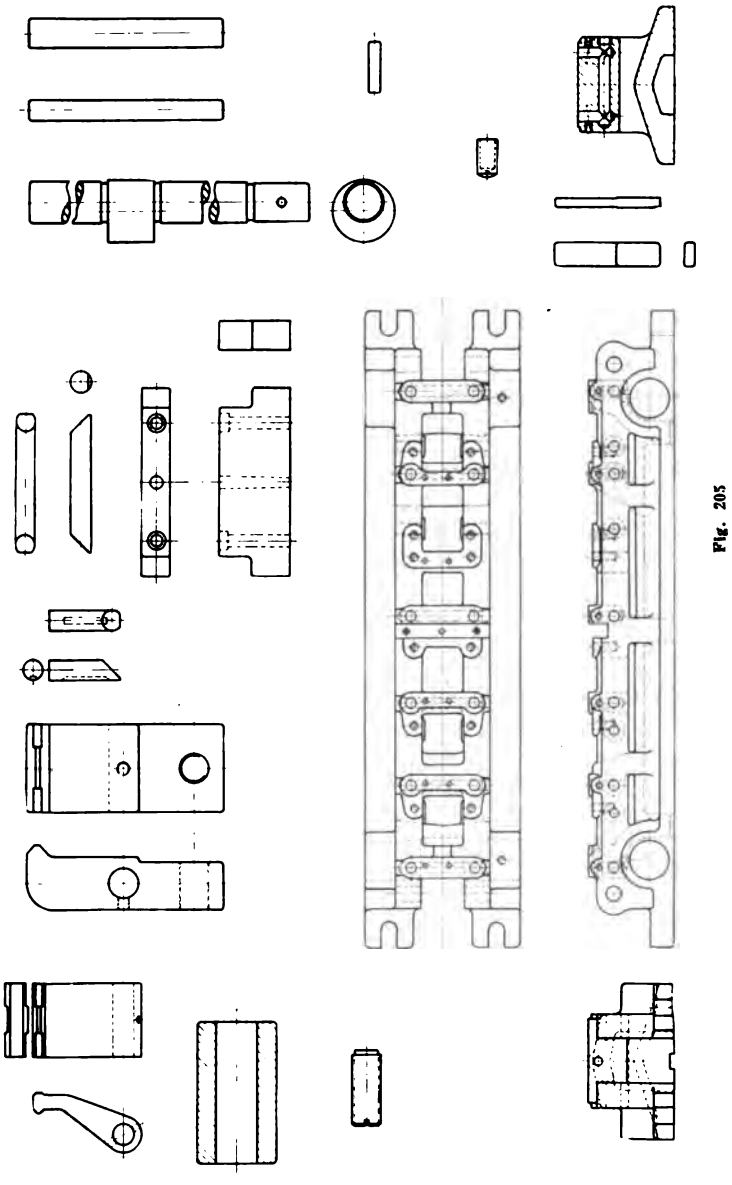

Fig. 205

passages in all, which completes the milling of all six sides of the 37 plugs. The fixture is then released, lifted off the table, and the other fixture containing new plugs dropped in its place. The operation is then repeated. With this arrangement the helper can be working all the time on the fixture that is off the milling machine table, and he can further be assisted by the machine operator in the intervals between reversing the feed, removing and inserting

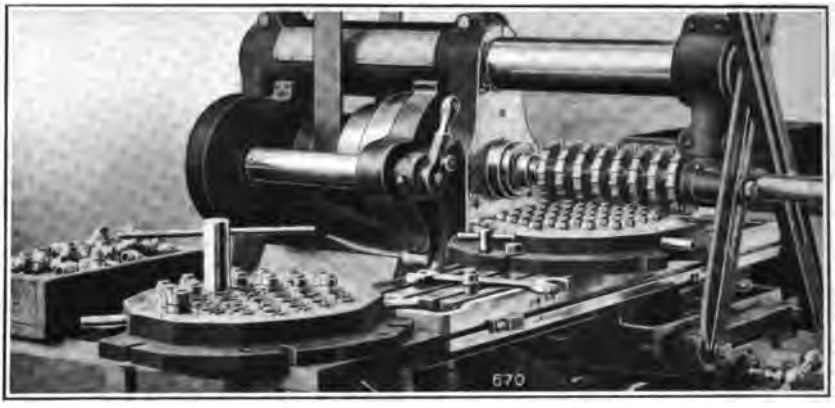

Fig. 205-A

No. 2 Plain Cone-Driven Miller with loading fixtures, each holding 37 spark plugs. Three indexings of the fixtures complete the six sides of the plugs. One man and a helper produce three complete spark plugs per minute.

the fixtures. For the successful operation of this method, reasonably quick devices must be used for the clamping of the loading fixture to the table, cams and compressed air having been successfully applied for this purpose.

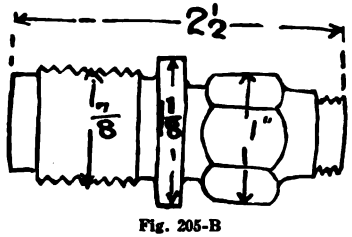

Fig. 205-B

Right Angle or Square Fixture. In all of the above cases we only use the table feed of the machine in one direction with a consequent idle return stroke which may or may not be utilized to give a finishing cut. To eliminate this return stroke we can, where the work is small enough, use a right angle or square fixture as referred to in the comparison of methods previously made. Such a fixture as shown in Fig. 206 does away with any idle travel whatever and often will, from the point of view of production, compare favorably with the rotary method.

In the fixture illustrated there are four compartments, the pieces being set as shown in the line cut, Fig. 207. All four pieces are milled by using a combination of table and cross feed. The methods of support are similar to those previously illustrated, the

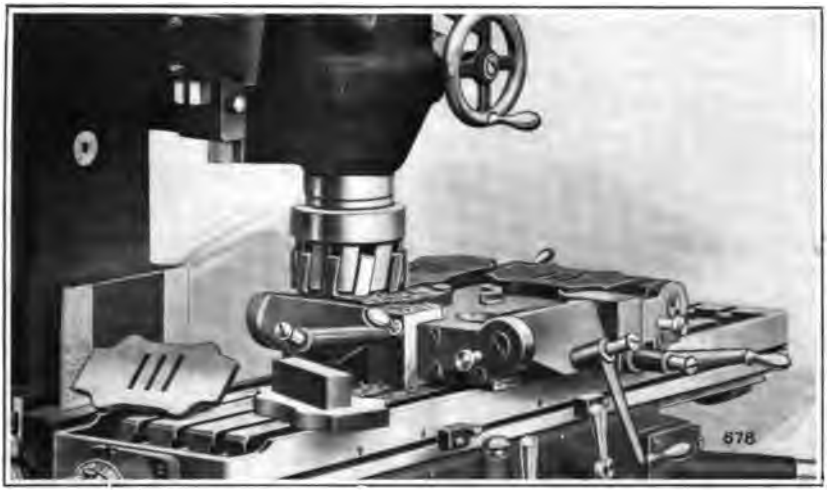

Fig. 206

No. 3 Vertical Miller with right angle or square milling fixture. Pieces, cast iron, 5" x 7½". Cut ⅛" deep. Cutter 6" diameter, 33 revolutions, feed 12¾" per minute. Time per piece 39 seconds

only notable points being the arrangement of the clamp, which it will be seen consists of a flat plate having trunnions which rotate in the fixture, being operated by a screw to which is attached per-

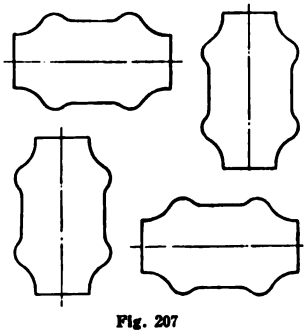

Fig. 207

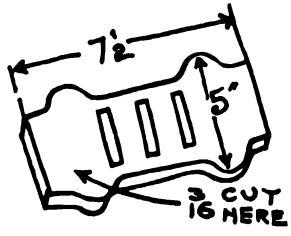

Fig. 207-A

manently a crank handle. The fulcrum of this plate, or clamp, is set back of the surface to be gripped so that the downward tendency is secured. The end of the screw operating these clamps is

turned down and provided with a screw head so that while the crank handle can easily be slipped off the square it can not be entirely removed from the screw and lost. This arrangement means that the operator can always set the crank handle in an easy position for gripping the work and still make allowance for variation in the thickness of the casting.

Another point to be observed on this fixture is that all of the four handles for gripping the work are brought either to the front or side of the fixture. Such an arrangement is, of course, absolutely necessary if any kind of speed in clamping is to be maintained.

One of the advantages of this type of fixture as compared with the rotary fixture, is that a more solid union is effected between the fixture and the milling machine, due to the abolition of the extra rotary attachment members. This method consequently lends itself rather more to those jobs that call for a reasonably heavy material removal in addition to a high production.

Rotary or Continuous Milling Fixtures. The rotary method of milling gives a high rate of production on certain classes of work. This has been dealt with in the earlier chapter on Milling Methods and we now show in Fig. 208 a fixture designed for holding pole pieces while milling the base surface. The location of this piece is rendered simple since a previous grinding operation provides a finished surface on which the piece may be located. The only points to be watched then are the method of gripping and the disposition of chips. For gripping the piece, reliance is placed on a central ring, this ring having a number of facets to correspond with the number of pieces held in the fixture. These facets are undercut at an angle which corresponds approximately with the curvature of the piece and they are additionally provided with file-cut surfaces which embed slightly into the surfaces of the pole piece and make a very efficient gripping device. The outer or movable gripping member is a cam provided with longitudinal serrations and pivoting around studs carried in the frame of the casting. The end of the cam projects in the form of a lever which is either tightened by hand or by blows from a lead hammer. The fixture itself is practically in two halves, the central half carrying the locating ring and the outer half carrying the gripping cams, these two halves being joined together by a series of ribs. In between these ribs the chips fall clear of the top surface of the Circular Attachment into a trough surrounding said attachment, from where they may be easily removed.

The foregoing illustrations cover practically the full line of standard methods of milling with face mills on both Horizontal and Vertical Machines.

Reciprocal Fixtures. When it is desired to mill either one or two faces parallel to each other, the reciprocating

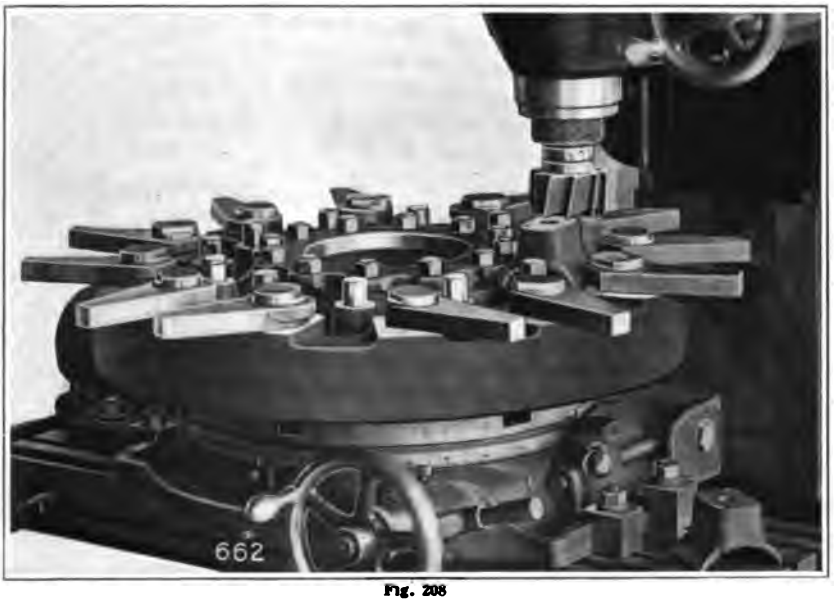

Fig. 208

No. 2 Vertical Miller with continuous milling fixture holding 12 polepiece forgings, with surfaces 2½" x 3". Cutter 4" diameter, 68 revolutions, feed 12¾" per minute. Production 4 per minute.

method is often used in conjunction with a gang of side mills. A good example of this is shown in Fig. 209, where a gang of four milling cutters machine at one passage two sides of two large hexagon nuts. To make the fixture comparatively universal, the studs on which the nuts (they have not been previously threaded) rest may be removed and substituted by other sizes. The nut is gripped to these studs by means of the two angular plates A, which move in slots BB, set at right angles to the surface to be gripped. These plates move downward through the right and left-hand screw D, operated by the crank handle C, shown on the right-hand side of the fixture. By this means two pieces are gripped with one movement

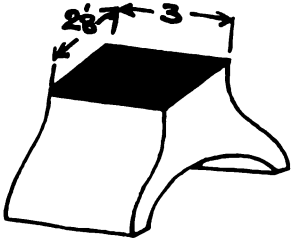

Fig. 208-A

of the lever and a wide range of sizes can be easily accommodated with the one fixture. There is nothing special to be noted in the construction of this other than the arrangement of the gripping pieces above described.

An elaboration of this method is found in Fig. 210, which shows a pair of hand-indexed fixtures arranged for cutting slots in the flanges of automobile hubs. It is, of course, obvious that this

Fig. 209

No. 4 High-Power Miller with reciprocal fixture milling 3" hexagon nuts (each surface 2¾" x 3"), with cutters 10" diameter, 26 revolutions, feed 1½" per minute, cut ⅛" deep. Time per piece including chucking 1¾ minutes.

method leaves a curve at the bottom of the slot corresponding to the diameter of the cutter. The work is gripped by a contracting collet or split end of the spindle of the attachment, the circular surface of the work having been previously turned. Attention is drawn here to a device that should more often be applied to milling fixtures; that is, the ejecting mechanism. It very often happens that a very well-designed fixture that is entirely satisfactory in every other point fails in that the closeness of fit between the gripping device and the work renders it difficult for the operator to remove the piece without a certain amount of manual labor that ought to be avoided. In this fixture a lever is provided, located conveniently at the rear of the fixture, which on being struck or pushed ejects the work. The details of the indexing are not particularly important and will be dealt with in that part of the chapter devoted to indexing fixtures.

Automatic Releasing Fixtures. Following the hand ejecting of work, one naturally comes to the automatic releasing and ejection of same. Fig. 211 shows an equipment for holding magneto base plates while milling the tops and edges. The piece rests on three fixed supports and is clamped by the central plate A, having knife edges, said plate being attached solidly to the fixture. The

Fig. 210

No. 3 High-Power Miller with reciprocal hand index fixtures finishing four slots 1" wide, 1" deep in automobile hubs. Feeding 4¾" per minute, removing ⅛" metal in 1.8 minutes per complete hub.

gripping is through two levers, B, with their fulcrum to the rear of the gripped surface, the gripping being actuated by a balanced cam, which in turn is connected to the handle C projecting from the front of the fixture, the details of this mechanism being shown in Fig. 212. There is nothing particularly interesting about this part, but attention is drawn to the small lever D carrying the pin E shown projecting from the rear of the fixture. This encounters a bracket fastened to the face of the column and when the table is returned either by hand, or as in this case, by the power quick return, to the starting point, the lever referred to, striking the bracket on the column, automatically throws open the gripping levers and permits of the work being removed without any releasing action on the operator's part. This fixture merely releases automatically and does not eject.

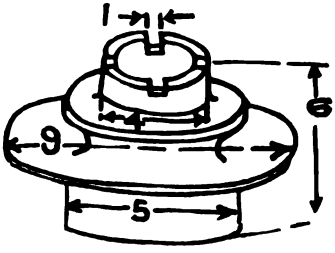

Fig. 210-A

Automatic Clamping, Releasing and Ejecting Fixtures. The fixture shown in Fig. 213 grips, releases and ejects automatically. It was designed for milling flats on the ends of terminals for storage batteries and is arranged with two inner rows of fixed V blocks. Opposing these blocks are a series of movable V blocks carried on the ends of plungers which are held against the work by very heavy

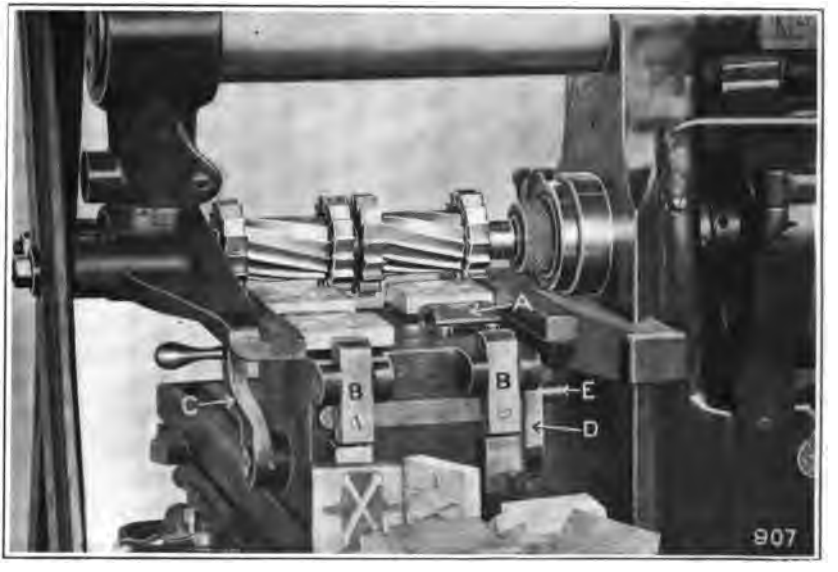

Fig. 211

No. 2 Plain Cone-Driven Miller with automatic releasing fixture finishing six sides of aluminum castings 2¾" x 3⅛" x 1/16" in two settings. Speed 225 revolutions, feed .020" (4½" per minute). Time .57 minute per piece.

springs, the containers, or cartridges for these springs extending outside the fixture as seen in the illustration. Each of these movable V blocks is arranged to hold two pieces. Immediately beneath the extension of the fixture which carries the V blocks is a support which is attached to the headstock or tailstock of the machine and consequently does not move with the table. Attached to the head and tailstock of the machine is a cam (this being made in sections) which first imposes a relatively light pressure on the spring plungers and later, at that part immediately beneath the cutters imposes a sufficiently heavy pressure to hold the work against the cut. The cam terminates immediately at the back of the cutters.

The pieces having been dropped into the V blocks rest on the stationary base and are carried along by the feed of the machine. As they approach the cutters the second portion of the cam grips them firmly while they pass under the cutters and after this they are entirely released. At this point the stationary base ends and the pieces which have hitherto been sliding along on this base drop

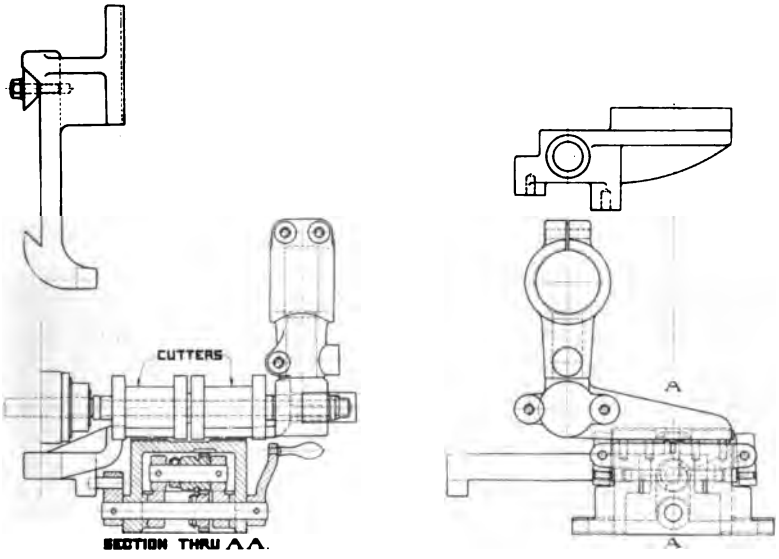

Fig. 212

out of the open V blocks into a chute which carries them away. At the conclusion of the stroke the table and fixture automatically return to the starting point; the operator loads up enough pieces to afford him a sufficient degree of safety, engages the table feed, and as the table moves forward, finishes loading up the fixture. This operation is, with the exception of the idle return, one of almost continuous production.

To approach closer to the ideal condition would entail the use of a swinging or indexing fixture which would duplicate the details of the one illustrated, with this exception: that the work-holding portion would be split up into two halves, one on each side of a vertical axis. The stroke of the machine would be shortened to agree with only that number of pieces held in the one half of the fixture, so that the operator would be able to entirely load one end while those pieces in the other end were being milled. At the end

of the cut the fixture would be swung around 180° and the cut immediately started on the new pieces. This would reduce the idle time to approximately one-tenth of a minute per half cycle, which loss need hardly be considered.

Hand Indexing Fixtures. Indexing, either hand or automatic can, of course, be applied to almost any type of fixture. The indexing may be for any of the following purposes:

a. To cut a number of faces or slots in a single piece.

b. To provide means for milling both ends of a piece.

c. To remove the loading and unloading position from too close proximity to the cutter, and

d. To provide continuous cutting and loading.

Fig. 214 shows a Clutch-Cutting Fixture that illustrates classification a, in which a number of interesting features are found.

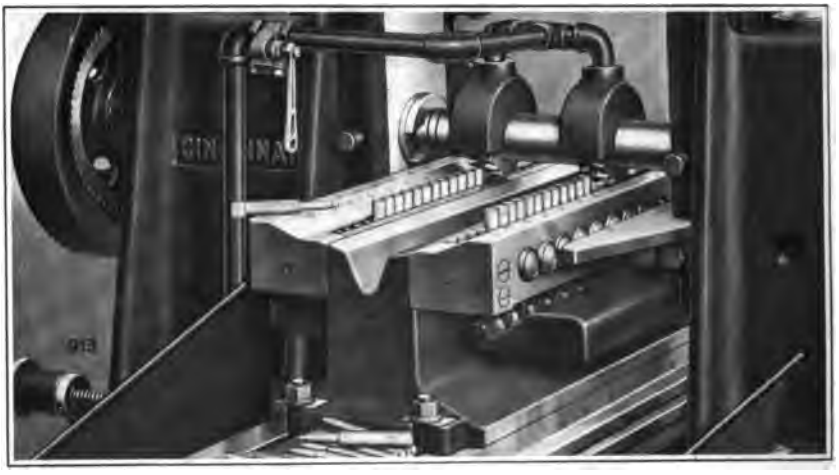

Fig. 213

Automatic Plain Miller fitted with automatic clamping, releasing and ejecting fixture, milling flats $\frac{1}{2}$" high, $\frac{1}{4}$" deep, on bars $\frac{5}{8}$" diameter. Cutting speed 315 feet. Feed 6" per minute. Accuracy within .0005". Production 11 pieces per minute.

These are shown clearly in the drawing, Fig. 215. This fixture was designed for cutting the teeth in clutches of different sizes, which had a rather widely varying number of teeth. The clutches are held by means of an expanding collet, the expansion being secured through a taper-headed drawbolt A, which is engaged by the lever B, shown projecting from the lower center of the fixture. This lever carries a segment of a nut, which segment is thrown

into engagement with the screw when the operator grips the secondary handle C attached to the main handle. When the secondary handle is released the segment immediately disengages itself from the screw, so that the work-carrying spindle can rotate, leaving the locking handle free. By this means the locking handle can always occupy the same convenient position in the front of the fixture so that the man does not have to hunt for it. Attached to the upper part of the work-carrying spindle is a removable index plate D, a number of these plates being provided to index different divisions. One of the plates for instance, has 24 teeth, so that clutches having 24, 12, 8, 6 or 4 teeth can be milled. The index plate is engaged with a long straight index pin E, which is connected to the camshaft, which is operated by the cam F, shown at the right-hand side of the fixture. This cam terminates

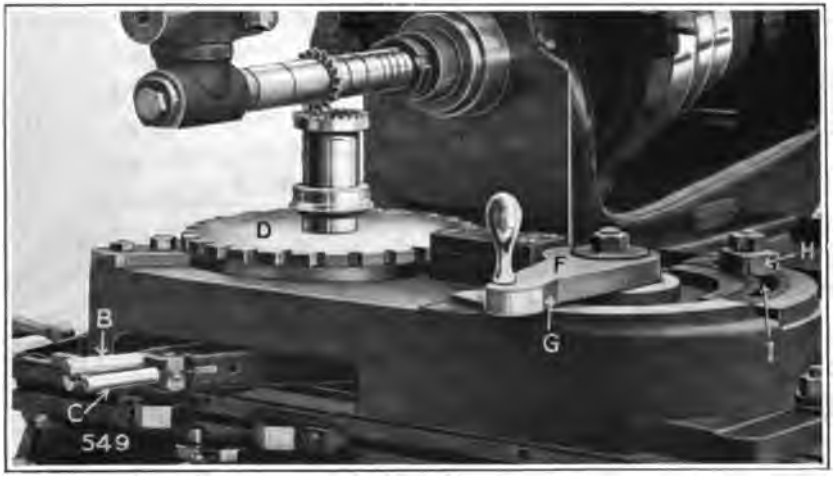

Fig. 214

No. 2 Plain Cone-Driven Miller with indexing fixture milling 27 teeth $\frac{1}{32}$" deep into steel clutches at 230 feet cutting speed, .073" feed (21" per minute). Total time for milling and chucking complete 7½ minutes each.

in a handle which in turn carries a stop block G, that abuts the movable block H, that is clamped to the serrated segmental T slot I. Certain portions of the stroke of this cam are constant so that the degree of rotation required for withdrawing or releasing the plunger and for driving the plunger home again are not affected by the degree of rotation required to insure the proper angle of indexing. This result is obtained through a link connection between

the cam proper and the stud S on which it rotates, so that the commencement of the withdrawal stroke and the conclusion of the locating stroke are unaccompanied by any rotation of said shaft. After the cam has been partially rotated and the plunger released, a continued movement of the cam will, through the pin N and slot P, cause a rotation of the shaft, but this without any rotation of the gears through which the work-carrying spindle is rotated.

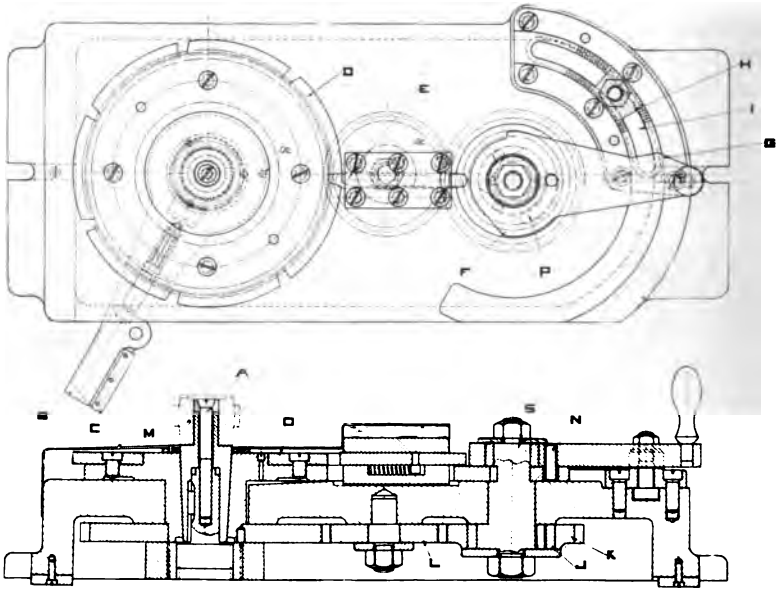

Fig. 215

When the cam has been rotated as far back as the stop will permit and a return stroke commenced, the roller clutch J, which will be noted at the lower end of the cam-carrying shaft engaging with the gear K, which forms the roller clutch, causes, through the intermediate gear, a rotation of the index or work-carrying spindle. This spindle is then indexed through the required number of degrees and the conclusion of the cam stroke, forcing the index plunger home, effectively locks the work in the required position; in other words, a single lever moved first to the left and then to the right, unlocks and withdraws the index plunger, rotates the work and locks the index plunger home again within the required slot so that the operator works entirely independent of the sense of touch and sight and can with the greatest ease secure the desired indexing.

The fixture is extremely low so that no undue twisting strains are imposed on the machine table and it is thoroughly protected against the bad effects of chips entering the indexing mechanism, this being effected through a cover which completely envelopes the outer part of the fixture. (The illustration, Fig. 214, was made

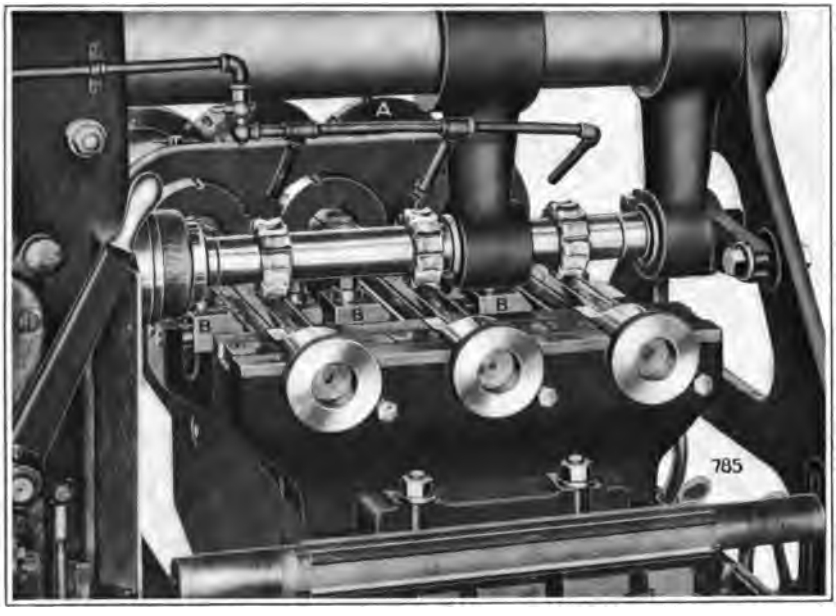

Fig. 216

No. 4 High-Power Miller with triple spindle indexing fixture milling splined shafts 2½" diameter, 18" long. Feed 3½" per minute. Keys accurate within .001"; diameter of shafts at bottom of keys, within .005". Time 18 minutes each.

with this cover removed, but it is shown in place in Fig. 119, page 133.)

This principle can, of course, be equally well applied to a multi-spindle indexing fixture.

Another type of Hand Indexing Fixture, in this case with three spindles, is shown in Fig. 216. Here all three spindles are indexed through the one lever which is attached to one of the index plates, A. However, to get accuracy in the indexing, individual index plates and plungers are fitted to each spindle, the withdrawing of the plunger and releasing of the same being effected through cams and loose gear connection between the three spindles. This arrangement has the advantage of giving accurate indexing, undisturbed

by the inaccuracy of the gear transmission between spindles and also has the speed that comes with the use of a single indexing lever. The particular job for which this fixture was designed, is that of milling splines in gas tractor shafts. This method of milling such parts is not recommended where a high degree of accuracy is required, on account of the practical impossibility of getting all three cutters

Fig. 217

Automatic Plain Miller with parallel tandem hand index fixture roughing out 8½", 52-tooth, 6-pitch, 1⅛" face, alloy steel ring gears with 4½" diameter cutters, 180 feet cutting speed in 13 minutes each.

to be, first, of the same diameter, second, to all run true; and third, to be all pitched with perfect relationship to the centers of the work on which each one operates. For roughing out and for certain grades of work, however, it is perfectly feasible.

It will be noted that with this fixture, supporting brackets were supplied in addition to the support given by the headstock and tailstock. These brackets carry spring V blocks B, which have to be loosened and reset after each indexing, as otherwise the lack of straightness in the work would, of course, affect the accuracy of the slots and keys produced.

Another Hand Indexing Fixture shown in Fig. 217 is designed to mill four bevel gears at one setting, arranged parallel in pairs, placed tandem. The fixture is to some extent universal in that the number of divisions can be varied, but the angle, of course, can only be changed through the insertion of taper shims A beneath

each half of the fixture. The index arrangement which controls all four spindles is attached to the front end of the fixture and consists of a plunger fitting into a bush, which plunger is keyed to a gear through which motion is transmitted to the wormshaft which rotates the different work spindles. By providing a slot in which the bush can be moved, either to or from the center and by varying the gear ratio, it is, of course, possible to vary the angle of division

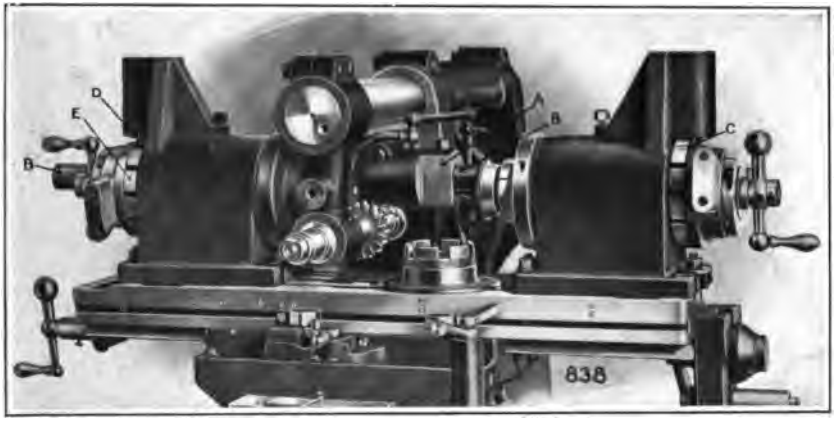

Fig. 218

No. 1 Plain Miller with automatic indexing fixture milling six slots in automobile hubs. Slots ¾" wide, ¾" deep. Cut from solid forgings in two minutes per hub, complete.

and still use a complete turn of the index plunger for each tooth to be milled.

This method of indexing has much to recommend it over the usual sector commonly applied on Dividing Heads and other indexing apparatus, since it eliminates entirely the danger of the operator inserting the plunger into the wrong hole, or accidentally opening up the space between the two legs of the sector.

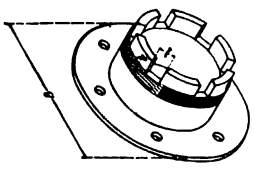

Fig. 218-A

Automatic Indexing Fixtures. A good example of the first type of indexing fixture with automatic indexing is shown in Fig. 218, which is the same method as that used in the Hand Indexing fixture, Fig. 210, and for almost identically the same piece. In this case, however, the fixture is automatically indexed through the power quick traverse of the machine. This indexing, which is through 60°, is accomplished through a bracket A fastened

to the face of the column, carrying a cam shaft B which engages with a ratchet-controlled cam C which withdraws the plunger D. The plunger has one straight and one angular side and is lifted out of engagement with the slots in the index wheel E, through a movement of the cam in a clockwise direction caused by the traverse of the fixture away from the cutter. The returning of the table to

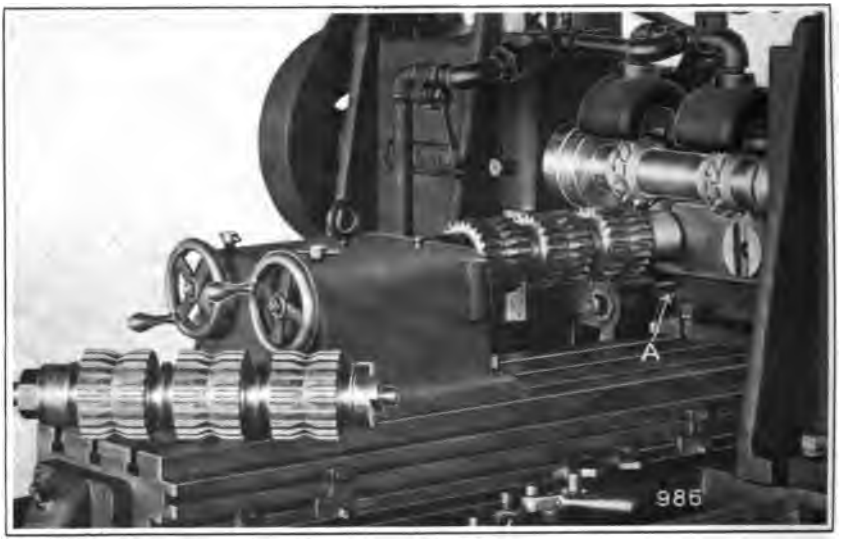

Fig. 219

Automatic Duplex Machine with double spindle automatic indexing fixture and gang of four cutters, roughing out 7-9-pitch, 33-tooth automobile transmission gears. Cutting speed 61 feet. Feed 8" per minute. Production 100 gears per ten-hour day. (Hoods have been raised to show cutters.)

bring the work again in touch with the cutter causes a reverse action of the pawl, which has, of course, been sliding along over the teeth of the ratchet and this is accompanied through a ratchet clutch by a clockwise rotation of the index plate, and at the conclusion of the stroke a release of the index pin, which, falling into the slot, takes care of the indexing. With certain slight variations this type of automatic indexing can be almost universally applied and is incorporated in most of the automatic index fixtures shown hereafter.

Fig. 219 shows an Automatically Indexed Double Spindle Fixture for roughing out spur gears, and Fig. 220 shows the rear view of this same fixture and gives a clearer idea of the means provided to secure rotation of both spindles through the one stationary

cam shaft A and the ratchets R, and also secure accurate indexing through the use of two plungers B and index plates C. Attention is also drawn to the use of four work arbors so that the operator can be loading up two of them while the machine is milling the pieces held in the other two. In this particular case gears have been roughed out with a maximum pitch variation of .001" which, of

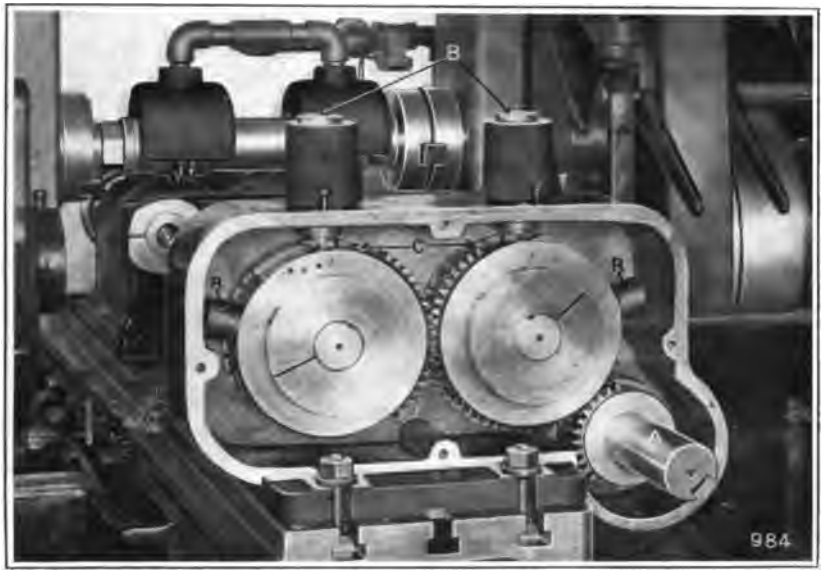

Fig. 220

course, would not be practical if the transmission from the first to the second work spindle through gearing was also the means for indexing the second spindle.

Swiveling Fixtures. Illustrating class b type of indexing (swiveling) fixture we show Fig. 221, representing a fixture used for milling connecting rods. Two of these rods are held side by side, and since the width of the ends is not the same they are placed with the large end of one at the side of the small end of the other. By first feeding in, one large and one small end is milled. After swiveling the fixture 180° the operation is repeated and the remaining two ends are finished so that both rods are machined at one time, doing away with the danger attendant upon a second chucking and the consequent lack of alignment. The indexing tooth A carried in the base plate of the fixture is hinged at B, projects over the edge

of the table and consequently can be placed low, thus reducing the total height of the fixture. For supporting the end of the connecting rod the angular adjustable support points (Fig. 190) are used and can be seen projecting from the left-hand side of the indexing plate at C.

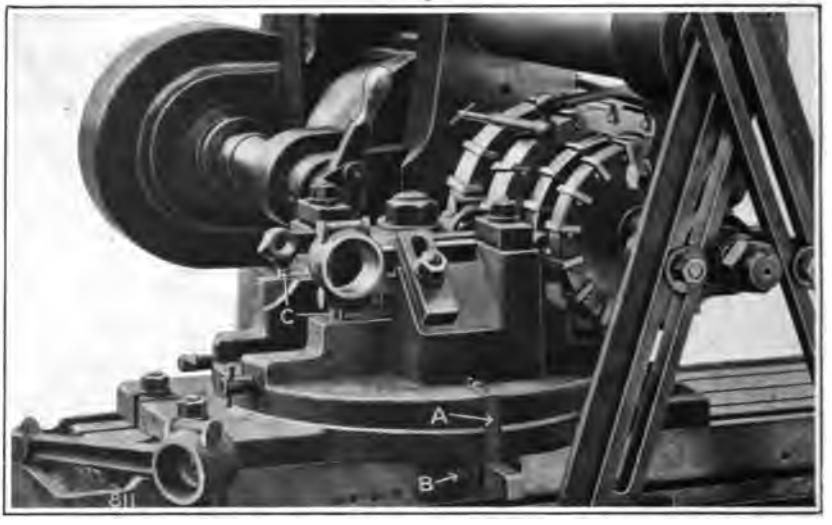

Fig. 221

No. 3 Plain Cone-Driven Miller with swiveling fixture finishing ends of automobile connecting rods. Cutters 10" and 8" diameter, feed .068", speed 41 revolutions. Time, including chucking, 3 minutes per piece.

Another simple type of hand indexing fixture shown in Fig. 222 dispenses with the use of a base plate. There is on this particular operation no need for extreme accuracy of indexing. If the job were being handled in sufficient quantities to justify a special machine for this operation it would without doubt be handled on an Automatic Duplex Miller. However, the quantities not warranting this, the simple equipment shown proved eminently satisfactory. The base plate to which the cylinder is clamped is bored out in the center to receive a stud, the lower part of this stud being flat to fit the T slot in the table. This stud is then clamped to the table by a bolt passing through its center and the

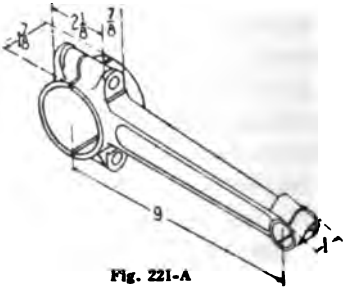

Fig. 221-A

fixture is dropped over the stud, rotating around it on the table surface. For indexing, a plunger A is used, which plunger is simply slid by hand along the same T slot of the table in which the pivoting stud is fastened. It is necessary to release the four bolts B that hold the fixture to the table and slide them and the indexing tooth out of engagement with the base of the fixture,

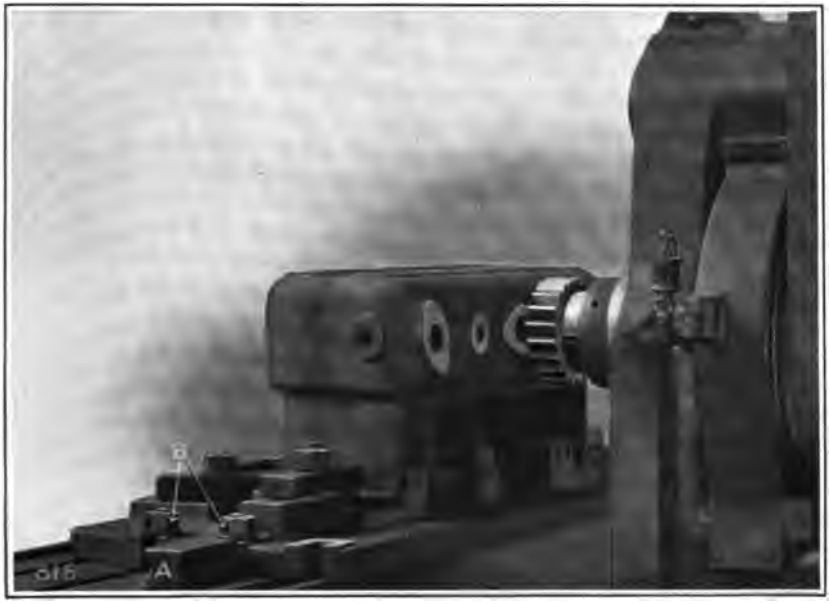

Fig. 222

No. 4 Cone-Driven Miller with swivel jig finishing bosses on engine cylinders. Cutter 6" diameter, 60 revolutions, .300" feed, cut ⅛" deep. Time, both sides, including chucking, 15 minutes.

after which the fixture may be swung around and the bolts and index tooth reinserted. There are, of course, objections to this method of indexing; first, the impossibility of adequately guarding the top of the table from chips and the consequent scratching and grooving of same; second, the lack of accuracy due to the impossibility of securing a proper and permanent sliding fit between the index tooth and the sliding table; and third, the time consumed in the indexing operation. One big advantage to be found from this construction is the great rigidity that results from clamping the fixture directly to the table.

Where it is desired to secure a combination of rapid indexing and at the same time great rigidity of clamping, there are very few

better methods than that used in the fixture shown in Figs. 223, 224, 225. This is a fixture designed to hold a piece of considerable height which was subjected to a very heavy hammering or intermittent cut, imposing great strains on the locking mechanism of the fixture. It was also necessary to get great accuracy of indexing between the two extreme positions, which positions were used when milling the angular surfaces of a piece, a section of which is shown

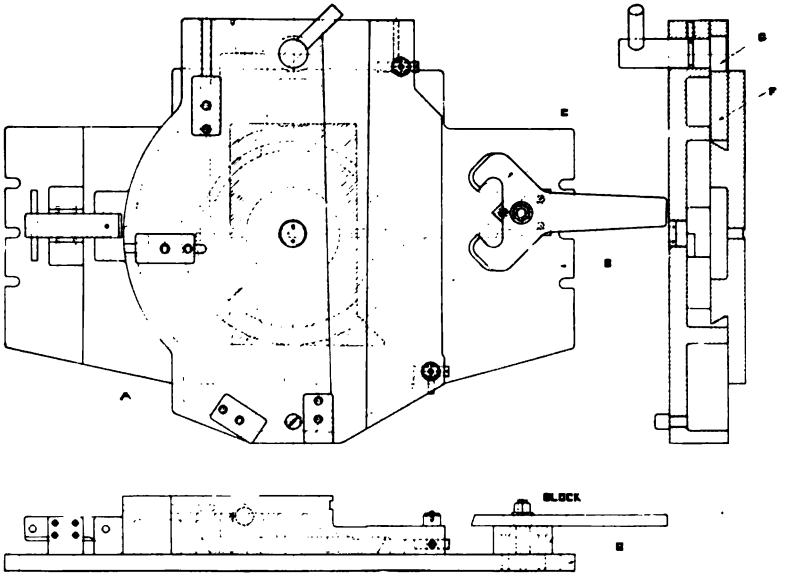

Fig. 223

at A. To accomplish these results the indexing was made through a pair of hardened plungers being brought into contact with similar hardened plungers in a block fastened to the stationary portion of the fixture B. These plungers, which were set up solid when in final position, also were arranged so that adjustment could be made by the toolmaker when assembling the fixture. To insure perfect contact between the fixed and indexing plungers, cam C was used, this cam being mounted on the bracket or fixed plunger support, and so being self-contained as far as the strains set up in insuring this contact were concerned. By this means the danger of a close and hard, alternating with a light and easy, contact were overcome. The indexing mechanism was, therefore, made to serve but one function, that of indexing, and had no connection with the rotating

mechanism, which takes the form of a semi-circular dovetail slide D, rotating around a corresponding complete dovetail E in the base plate. (Fig. 224.) Entering into and forming the other half of the bearing or dovetail is a dovetail slide F, Fig. 223, which is forced forward and released by means of the cam G, shown at the rear. The effect of the angularity of the sliding member and the angularity of the circular dovetail portion is to pull the rotating member firmly on to its seating over its full surface, which ar-

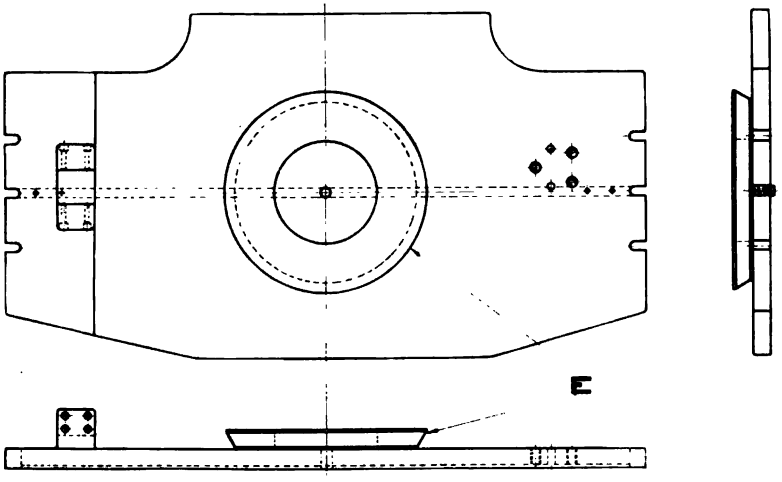

Fig. 224

rangement can hardly be accomplished by any combination of horizontal and vertical locking mechanisms, since in this design the horizontal and vertical adjustments are made simultaneously. An unusual rigidity in the locking mechanism and unusual maintenance in correct bearing is secured with this construction, which can be strongly recommended for work where accuracy and long life are desired.

Separation of Swiveling from Indexing Functions. *It is always particularly desirable in accurate indexing mechanisms to separate those parts which are responsible for the entirely different functions of swiveling and indexing.* A comparatively simple and extremely rigid indexing fixture is that shown in Fig. 226. This fixture was designed for cutting grooves either straight or angular in cutter blanks. When cutting the straight grooves the fixture was mounted directly on the table of the machine and when cutting angular grooves on an angled raising block A, as shown in the

illustration. The interesting features of this fixture are the extremely liberal index teeth and the arrangement of the index plunger. The details of this are shown in Fig. 227. It will be noted that the index plunger proper is a separate piece of hardened steel fastened to a

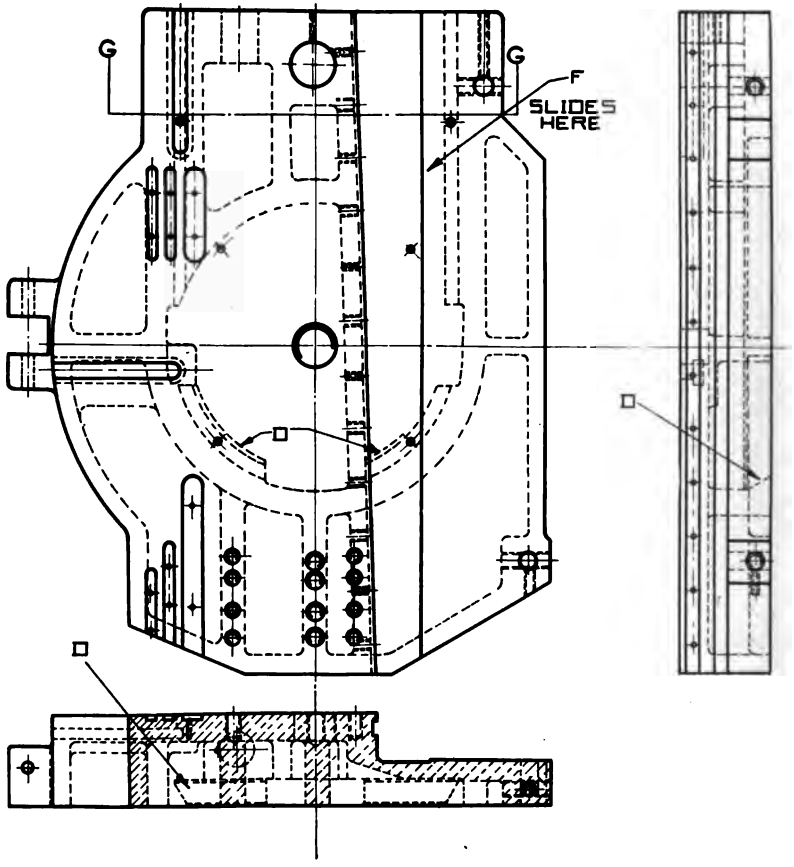

Fig. 225

pivoting member B, the pivot being placed so that it is as nearly as possible in a line perpendicular to the straight side of the index tooth and starting from the end of that tooth. With this arrangement it is impossible to cause engagement between the tooth and index slot until the index plate shall have rotated past the desired position. The driving home of the index tooth, therefore, causes sliding action between the angular surfaces of the index tooth and

slot and brings the straight sides of these members together without any sliding friction and consequent wear. As a result the accuracy of indexing is much more permanent than when this little point is neglected. It can, of course, be easily seen that if wear is permitted to take place indiscriminately on both sides of the index plunger and is not confined to the one unimportant nonaligning

Fig. 226

No. 3 High-Power Miller with hand index fixture cutting 20 slots ½" wide, 1½" deep, into a 12" diameter steel face mill body 2½" thick, at two cuts, feeding 2" per minute in 78 minutes per body complete.

side we will have much less certainty as to the accuracy of the indexing than when such precautions are observed. For driving the index plunger home a cam C is used, this consisting of a disc having a flat milled on it and having a hole bored eccentric to the circular contour. This is a very simple construction and gives not only a powerful lock but also a quick release and is done without any elaborate cam construction. In place of the usual arrangement for pulling out the index pin which, as a rule, consists of a spiral spring in tension anchored to some convenient part of the fixture, A SPIRAL

SPRING IN COMPRESSION is used, this spring being let one-half into the fixture and one-half into the index plunger or pivoting plate. The details of this are clearly shown in the drawing and it is recommended as a very convenient and satisfactory spring arrangement in that the spring can be given a small travel with less likelihood of permanent set and at the same time is thoroughly concealed and

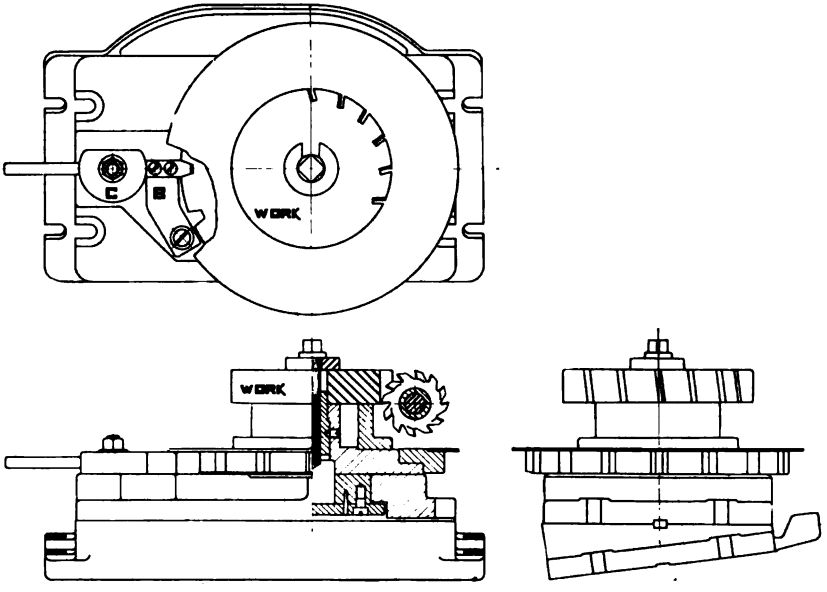

Fig. 227

guarded from injury either in use or transit from the machine to the toolroom.

The foregoing description covers most of the standard milling fixture construction. It can not do more than indicate the different types and it must not be understood that these standard types will cover all classes of milling.

For every individual job a different set of conditions arise, demanding a separate study. The proper designs for fixture and cutter are essential if the milling machine is to be an efficient tool. Lacking these, there is but little chance for any satisfactory results to follow its installation.

CHAPTER XIV

THE SIZING AND CUTTING OF SPUR GEARS

If two smoothly turned rolls are mounted on parallel shafts with their surfaces in close contact, as shown in Fig. 228, and one is turned through an arc, then the other will also revolve. If the circumferences of the end faces are divided into equal parts, and at the start two division lines are placed opposite each other, then, as we turn, the other division lines will come in line with each other. In other words, the circumference of the driven roll moves as many inches as the circumference of the driver. If the driver has 6″ circumference and the driven 12″, then it takes two entire turns of the driver to bring the driven roll around once. We see, therefore, the number of turns of the two rolls are in inverse ratio to their circumferences, and consequently to their diameters. This is, of course, only theoretically true, as in actual practice there would be slippage.

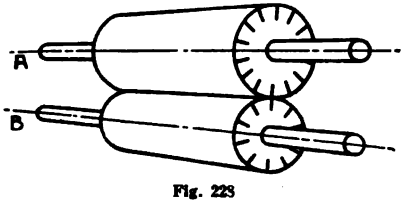

Fig. 228

To prevent slippage both rolls are provided with teeth. It would not be safe to provide roll A alone with teeth on the outside, as these teeth would have no place to go unless we cut corresponding grooves into roll B. To make all such revolving parts of similar construction, we provide them with teeth above and grooves below their friction surfaces. Although the friction surface itself has then disappeared entirely, it remains the most important factor in the design of such parts. The diameters of these two friction surfaces determine the ratio of the number of revolutions of these rolls.

Rolls with teeth are called gear wheels. When the rolls are cylinders, as shown, the gear wheels are called spur gears. The original friction surfaces are called pitch surfaces or pitch cylinders. A section of the pitch surface at right angles to the axis is called a pitch circle, or more generally the pitch line.

As there is no slippage possible between the teeth of these wheels, our rule now becomes absolutely fixed. *The relative number of revolutions of two mating spur gears is in inverse ratio to their pitch circumferences, and consequently to their pitch diameters.*

In order to get a smooth uniform action of one gear on the other, the teeth must be of a certain definite shape. It is possible to make the teeth of one of the rolls of almost any shape, provided the teeth of the mating roll are shaped to suit. It is desirable, however, to make gear wheels in such a way that a given wheel can run with many others and not solely with the one with which it is mated, because in many mechanisms gear wheels must be interchangeable. The experience of a great many years has gradually limited the shapes of gear teeth to only one system; namely, the involute shape of tooth.

Circular Pitch. If the rolls shown in Fig. 228 were provided with a tooth at every point where a mark appears, the distance between these marks would be called the PITCH of the gear wheel. We say, therefore, that:

The pitch of a gear wheel is the distance from center to center of two adjoining teeth, measured along the pitch circle. This pitch is called the CIRCULAR PITCH.

Chordal Pitch. Years ago, when practically all gear wheels were cast and when the patternmaker had to construct the gear wheel, he used his dividers to space the teeth of his pattern. The dividers were set to the length of the chord and not the arc, between the centers of two adjoining teeth. This distance was therefore called "chordal pitch." This chordal pitch is not used in metal gear cutting and will not be considered here.

Diametral Pitch. When the diameter of a circle is an even number of inches, or some simple fraction, the circumference of that circle becomes a decimal fraction which never expresses exactly the length of the circumference, however many decimals we might use. If the diameter is 1″, then the circumference is 3.1415926535. Of course it would not be practical to use all these figures, nor would it be practical to work to such a degree of accuracy, and therefore the circumference of the 1″ circle is often expressed by 3.1416, and sometimes even by 3.14. There are also common fractions which express the length of the circumference very closely, such as, $\frac{22}{7}$

for ordinary work, and $\frac{355}{113}$ for more accurate work. In either case the circumference is an odd fraction when the diameter is a simple figure or fraction, and vice versa, the diameter would be an odd figure if the circumference were an even figure. The use of circular pitches, therefore, leads to awkward fractions when computing a set of gears. To simplify the matter, DIAMETRAL PITCH has been uniformly adopted. This makes it easy to determine any factor in the design of a gear when some of the others are known, as for instance, to find the number of teeth when diameter and pitch are given, and so on.

The diametral pitch is a number expressing how many teeth there would be in a gear of 1″ pitch diameter.

If, for instance, the diametral pitch is 10, then a gear 1″ pitch diameter would have 10 teeth, a gear 2″ pitch diameter would have 2 x 10 = 20 teeth. This 2″ diameter gear would have 2 x 12 teeth if the pitch were 12, and 2 x 16 teeth if the pitch were 16, and so on. From these simple data we derive the following rules:

To find the number of teeth of a gear, multiply the diametral pitch by the pitch diameter.

To find the pitch diameter of a gear, divide the number of teeth by the diametral pitch.

To find the diametral pitch of a gear, divide the number of teeth by the pitch diameter.

To find the center distance of two mating gears, divide half the sum of their teeth by the diametral pitch.

To find the sum of the numbers of teeth of two mating gears, multiply their center distance by the diametral pitch and multiply this product by 2.

In all that follows, "Pitch" is understood to be the Diametral Pitch, unless otherwise designated. It will be represented by the letter P. Circular Pitch by P′.

Addendum and Dedendum. It is not only necessary to have a certain standardized shape of the gear teeth if we want the gears to be interchangeable, but it is also necessary that all gears of the same pitch should have the teeth project the same fixed height above the pitch surface and the grooves the same fixed depth below. A number of considerations enter into this matter and there has been established a definite relation between these dimensions of the

teeth and the pitch. The system most common at the present time makes the height of the gear tooth above the pitch line (pitch surface) equal to 1 divided by the pitch. For a 5-pitch gear this height would be $\frac{1}{5}''$. For a 10-pitch gear it would be $\frac{1}{10}''$, etc. This is called the ADDENDUM.

The depth of the tooth below the pitch surface is made equal to the height above the surface. This is called the DEDENDUM. If gears were actually made this way they would have to be absolutely perfect and their center distance would have to be absolutely correct, otherwise the top of a tooth might interfere with the bottom of a groove of the mating gear. For that reason the grooves are cut somewhat deeper than this theoretical depth. This additional depth is called CLEARANCE. The sum of addendum and dedendum is called WORKING DEPTH. The difference between working depth and the full depth is called CLEARANCE.

Outside Diameter.* If we have a gear of 20 teeth, 10 pitch, then its picth diameter is $\frac{20}{10} = 2''$. The addendum of such a gear would be $\frac{1}{10}$ and, as this addendum is added to the radius of the gear, the outside diameter of this gear will be $2.2''$. This outside diameter is the same as the pitch diameter of a gear of 22 teeth, 10 pitch, so that we find the following rules:

The outside diameter of a gear is found by adding 2 to the number of teeth, and then dividing it by the pitch.

The number of teeth of a gear is found by multiplying the outside diameter by the pitch and then subtracting 2.

Circular Pitch, Clearance and Full Depth. We have seen that a gear 1″ pitch diameter, 10 pitch, has 10 teeth. Such a gear would have a pitch circumference of 3.1416, so that the circular pitch of this gear would be 3.1416 divided by 10 = .31416.

*If there are two mating gears on a pair of shafts, and there should also be another pair of gears on these shafts opposite each other, but which must clear each other, then the outside diameters of these gears added together must be somewhat smaller than the sum of the pitch diameters of the mating gears. In other words, the sum of the numbers of teeth of the two gears which must clear each other must be at least four less than the sum of the numbers of teeth of the mating gears. As the slightest error in the size of the mating gears, or the center distance, would cause the other gears to interfere, it is customary to either make the sum of their numbers of teeth five less than that of the mating gears, or else turn them down a slight amount.

To find the circular pitch, divide 3.1416 by the diametral pitch.

It is customary to make the CLEARANCE at the bottom of the teeth equal to $\frac{1}{20}$ of the CIRCULAR PITCH. The total depth of a tooth being composed of the addendum, dedendum and clearance, is found as follows:

Since the circular pitch equals $\frac{3.1416}{P}$ then $\frac{1}{20}$ of the circular pitch $= \frac{3.1416}{P} \times \frac{1}{20} = \frac{.157}{P}$ that is .157 divided by the pitch.

Since the

Addendum = 1 divided by the pitch $= \frac{1}{P}$

Dedendum = 1 divided by the pitch $= \frac{1}{P}$

Clearance = .157 divided by the pitch $= \frac{.157}{P}$

We have by adding these

$$\frac{1}{P} + \frac{1}{P} + \frac{.157}{P} = \frac{2.157}{P} = \text{whole depth.}$$

From the above we deduce these rules:

The whole depth is 2.157 divided by the pitch.

The clearance is 0.157 divided by the pitch.

Pressure Angles. Fig. 229 shows a pair of teeth of two mating gears in such a position that a point on the pitch circle of one gear is pressing on a point of the pitch circle of the mating gear. The direction of this pressure depends on the shape of the teeth. The most common form of tooth used at the present time is such that the direction of the pressure AB makes an angle 14½ degrees with the tangent common to the pitch circles at this point. This line AB in the direction of the pressure is called the line of action. In later years many builders of machinery have adopted a sys-

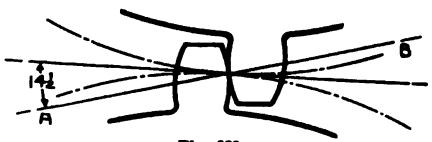

Fig. 229

tem of gearing by which this line of action makes an angle of 20 degrees with the common tangent. It was formerly thought that such an angle of 20 degrees would cause too much pressure on the bearings, too much wear on the gear teeth and a less smooth action between the gears, but recent thorough investigation has shown that this is not so. It has been found, on the other hand, that the teeth are stronger, the pressure on the bearings is not perceptibly more, the action is as smooth, and the wear on the teeth is not greater.

A rack belonging to the system of gears which has an angle of action of 14½ degrees, has teeth with straight sides which make an angle of 14½ degrees with the vertical. When the angle of action is 20 degrees, the rack teeth will also be straight, but make an angle of 20 degrees with the vertical.

Not all makers of gear wheels make the addendum and dedendum as indicated above. Sometimes the teeth are made shorter and are called stub teeth. These, however, will not be discussed here.

It is customary to make the tooth and the space equal in width, therefore the thickness of the tooth on the pitch line equals half the pitch.

Selecting the Cutter. The shape of the tooth changes with the number of teeth of the gear, so that the exact shape of a tooth of a gear with 179 teeth is different from the proper shape for a 180-tooth gear. The difference would be extremely small in this case, but it would be somewhat greater for gears of 20 and 21 teeth respectively. This difference in shape becomes more marked in gears with the smaller number of teeth. For most practical purposes these variations can be ignored to a certain extent. It is common practice to cut gears with any number of teeth, but, of course, all of the same pitch, with eight different shapes of teeth, so that a set of only eight cutters is required for one pitch to cut any gear from 12 teeth up to a rack. The eight cutters adopted are:

No. 1 to cut a wheel from 133 teeth to a rack.
No. 2 to cut a wheel from 55 teeth to 134 teeth.
No. 3 to cut a wheel from 35 teeth to 54 teeth.
No. 4 to cut a wheel from 26 teeth to 34 teeth.
No. 5 to cut a wheel from 21 teeth to 25 teeth.

No. 6 to cut a wheel from 17 teeth to 20 teeth.
No. 7 to cut a wheel from 14 teeth to 16 teeth.
No. 8 to cut a wheel from 12 teeth to 13 teeth.

These eight cutters are made with the correct shape for the lowest number of teeth which they are supposed to cut. If then, we want to cut a gear with 48 teeth we must select the No. 3 cutter, which will cut gears of from 35 to 54 teeth, but we know that the shape of the tooth will not be entirely correct. The shape thus produced will be found sufficiently accurate in a large number of cases where high speeds and great smoothness of running are not essential. However, if gears must be cut very accurate, then it becomes necessary to use a special cutter made to the correct shape for that particular number of teeth. Cutter makers are prepared to furnish such cutters.

Cutting Gears on the Milling Machine. Until within the last few years, practically all cut gears were made by means of a rotary milling cutter of such a shape as to produce the correct shape of teeth. Now, many gears are made by the process of hobbing or shaping. In this discussion we are concerned only with the process of milling the teeth. Ordinarily, gear wheels are milled on automatic gear-cutting machines, which are specially designed for this one class of work. However, the installation of a gear cutter may not be advisable in a shop that has not much gear cutting to do. In such cases this work is done on the milling machine. A milling machine will cut the teeth as rapidly as a gear cutter, and it does not take longer to set up the milling machine than the gear cutter. Aside from having an indexing worm wheel of large diameter, the only advantage it has over the milling machine is that it automatically indexes the gear and returns the cutter at a rapid rate. The gear cutter then does not require any further attention after a job has once been started, whereas the milling machine requires the attention of an operator for indexing and advancing the work and throwing in the feed. This, however, does not amount to anything where only one or a few gears of a kind have to be cut at one time, so that, even in shops where there are gear cutters, odd jobs of gear cutting are frequently done on the milling machine, because this machine lends itself to rapid setting up and no particular preparation for indexing is required. Fig. 230 shows the milling machine in operation milling a spur gear.

Setting the Machine. When setting up the machine for cutting a spur gear, care should be taken to see to it that the machine is in correct adjustment in every respect, all as discussed on pages 65-66 in the paragraphs on the use of the Dividing Head. It is of the utmost importance that the cutter be kept sharp. This is discussed in detail in Chapter X, on Cutter Sharpening. A properly sharpened

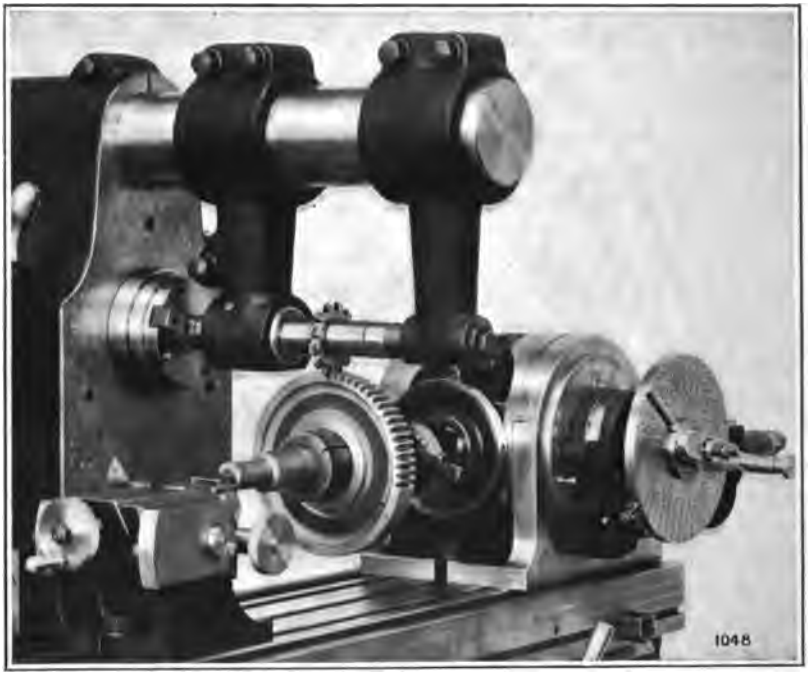

Fig. 230

Cutting a spur gear on the Milling Machine. The gear is held between centers in the usual way.

cutter should be mounted on the arbor as close to the end of the spindle as permissible, and it may be well to use an intermediate support as in Fig. 230 to give additional stiffness to the arbor.

Now, adjust the table so as to bring the dividing head center up close to the cutter and then make transverse adjustments to bring the dividing head center to coincide exactly with the center of the face of the tooth of the cutter. Since gear cutters are all provided with a central line on the outside of their teeth this can be very easily done by simply bringing the dividing head center to coincide with this line on the cutter. We can now lower the table,

place our piece of work between centers and properly secure it by means of a dog to the driver, making sure that there will be no chance for back lash.

The index pin must be set to the proper circle of holes as determined from the index tables; the plate itself must be securely locked, making sure that there is no back lash at this point; the index pin should be brought around in the direction in which the indexing will be done, which is preferably in the direction of the hands of a clock and allowed to drop into one of the holes. Then set the sector for the proper spacing; tighten the spindle clamp at the rear of the dividing head; start the machine; raise the work up carefully until the revolving cutter begins to show the first slight evidence of touching the work; then set the elevating dial to zero, run the table to the right clear of the cutter and then raise up the required amount for the proper depth, all of which may be read from the dial; disengage the elevating crank so as to reduce the possibility of the adjustment being disturbed, and now we are ready to proceed with the milling.

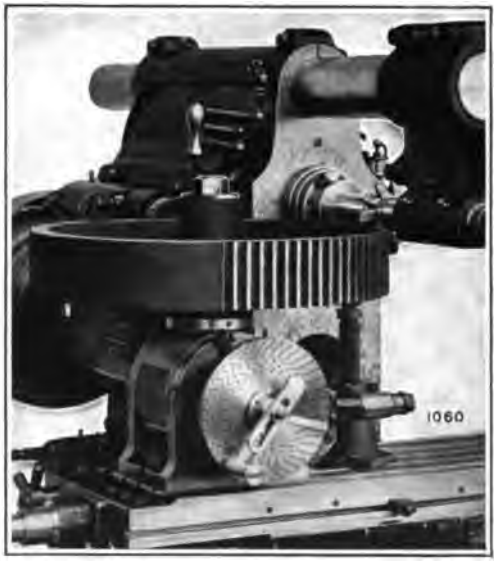

Fig. 231

Cutting a large spur gear on the Milling Machine by setting the dividing head spindle vertical and using the up feed.

Cutting Large Gears. It sometimes happens that the milling machine is called upon to cut gears which are so large in diameter that they can not pass between the table in its lowest position and the cutter on the arbor. Such work can be done in two different ways.

First, by using the Undercutting Attachment, described on page 25. This attachment makes it possible to cut gears of large dimensions and coarse pitches on machines of moderate size.

Second, by setting the spindle of the Dividing Head in a vertical position as shown in Fig. 231. It will be quite clear that by holding

the work in this position a very large gear can be accommodated, but instead of using the longitudinal table feed we must now use the vertical feed, and we should feed UP so that the pressure of the cutter on the work will be down towards the table. This makes it comparatively simple to place a supporting rest under the rim of the gear as close as possible to where the cut is being taken. It must of course be remembered that although the dividing head is made to a close degree of accuracy, nevertheless, as the gears grow larger the index errors which do exist will be correspondingly multiplied. However, these methods make it possible to cut very satisfactory gears whenever an occasional odd size gear must be cut.

Table of Tooth Parts

Diametral Pitch	Circular Pitch	Whole Depth of Tooth	Thickness at Pitch Line	Addendum	Working Depth of Tooth
1¼	2.5133	1.726	1.257	.8000	1.600
1½	2.094	1.438	1.047	.6666	1.333
1¾	1.795	1.233	.898	.5714	1.1429
2	1.570	1.078	.785	.5000	1.000
2¼	1.396	.959	.698	.4444	.888
2½	1.256	.863	.628	.4000	.800
2¾	1.142	.784	.571	.3636	.727
3	1.047	.719	.524	.3333	.666
3½	.897	.616	.449	.2857	.571
4	.785	.539	.393	.2500	.500
5	.628	.431	.314	.2000	.400
6	.523	.360	.262	.1666	.333
7	.448	.308	.224	.1429	.285
8	.392	.270	.196	.1250	.250
9	.349	.240	.175	.1111	.222
10	.314	.216	.157	.1000	.200
11	.285	.196	.143	.0909	.181
12	.261	.180	.131	.0833	.166
14	.224	.154	.112	.0714	.142
16	.196	.135	.098	.0625	.125
18	.174	.120	.087	.0555	.111
20	.157	.108	.079	.0500	.100
22	.142	.098	.071	.0455	.090
24	.130	.090	.065	.0417	.083
26	.120	.083	.060	.0385	.076
28	.112	.077	.056	.0357	.071
30	.104	.072	.052	.0333	.066
32	.098	.067	.049	.0312	.062

The "whole depth of tooth" is the depth to be cut in gear.

Rules and Formulas for Dimensions of Spur Gears

For the sake of convenience the useful rules that can be deduced from the foregoing discussion of spur gears, together with their formulas, are given on the following pages. In view of the fact that practically all the gear problems arising in the machine shop are based on the use of diametral pitch, we have tabulated the rules and formulas for diametral pitch by themselves and give in a supplementary table similar rules and formulas for circular pitch for use when such gears are to be made. We believe this separation of the data for diametral pitch from those for circular pitch will avoid the confusion that sometimes arises when they are all placed in one table.

In these tables the following notation is used:

P = diametral pitch.
P' = circular pitch.
N = number of teeth; (if the number of teeth in both gear and pinion are referred to, Ng = number of teeth in gear, and Np = number of teeth in pinion).
D = pitch diameter.
C = center distance.
S = addendum.
F = clearance.
W = whole depth of tooth.
T = thickness of tooth.
O = outside diameter of gear.

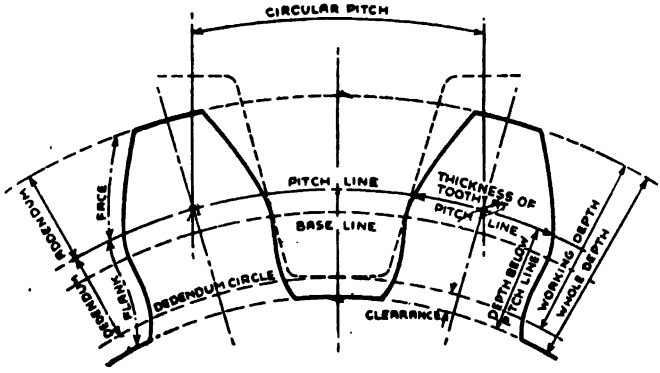

Fig. 222. Gear Tooth Parts

The circular pitch is defined as the distance from center to center of two adjacent teeth along the pitch circle. The diametral pitch is a number found by dividing the number of teeth by the pitch diameter. In other words, it gives the number of teeth for each inch of pitch diameter.

Rules and Formulas for Dimensions of Spur Gears Made to DIAMETRAL PITCH

To Find	Rule	Formula
Diametral Pitch	Divide number of teeth by pitch diameter.	$P = \frac{N}{D}$
Number of Teeth	Multiply pitch diameter by diametral pitch	$N = P \times D$
Number of Teeth	Multiply the outside diameter by the pitch and subtract 2	$O \times P - 2$
Total Number of Teeth in a Pair of Gears	Multiply the center distance by the diametral pitch times 2	$C \times P \times 2$
Pitch Diameter	Subtract two times the addendum from outside diameter	$D = O - 2S$
Pitch Diameter	Divide number of teeth by diametral pitch.	$D = \frac{N}{P}$
Outside Diameter	Add two times the addendum to the pitch diameter	$O = D + 2S$
Outside Diameter	Add 2 to the number of teeth and divide the sum by diametral pitch	$O = \frac{N + 2}{P}$
Whole Depth of Tooth	Divide 2.157 by diametral pitch	$W = \frac{2.157}{P}$
Addendum	Divide 1 by diametral pitch	$S = \frac{1}{P}$
Dedendum	Divide 1 by diametral pitch	$\frac{1}{P}$
Clearance	Divide 0.157 by diametral pitch	$F = \frac{0.157}{P}$
Thickness of Tooth	Divide 1.5708 by diametral pitch	$T = \frac{1.5708}{P}$
Center Distance	Add the number of teeth in both gears and divide the sum by two times the diametral pitch	$C = \frac{Ng + Np}{2P}$
Center Distance	Divide the sum of the pitch diameters of a pair of gears by 2	$\frac{D + D}{2}$
Length of Rack	Multiply number of teeth in rack by 3.1416 and divide by diametral pitch	$L = \frac{3.1416\,N}{P}$

Rules and Formulas for Dimensions of Spur Gears Made to CIRCULAR PITCH

To Find	Rule	Formula
Diametral Pitch	Divide 3.1416 by circular pitch	$P = \frac{3.1416}{P'}$
Circular Pitch	Divide 3.1416 by diametral pitch	$P' = \frac{3.1416}{P}$
Pitch Diameter	Multiply number of teeth by circular pitch and divide the product by 3.1416	$D = \frac{NP'}{3.1416}$
Center Distance	Multiply the sum of the number of teeth in both gears by circular pitch and divide the product by 6.2832	$C = \frac{(Ng + Np)P'}{6.2832}$
Addendum	Divide circular pitch by 3.1416	$S = \frac{P'}{3.1416}$
Clearance	Divide circular pitch by 20	$F = \frac{P'}{20}$
Whole Depth of Tooth	Multiply 0.6866 by circular pitch	$W = 0.6866\ P'$
Thickness of Tooth	Divide circular pitch by 2	$T = \frac{P'}{2}$
Outside Diameter	Multiply the sum of the number of teeth plus 2 by circular pitch and divide the product by 3.1416	$O = \frac{(N + 2)\ P'}{3.1416}$
Circular Pitch	Multiply pitch diameter by 3.1416 and divide by number of teeth	$P = \frac{3.1416\,D}{N}$
Pitch Diameter	Subtract two times the addendum from outside diameter	$D = O - 2\ S$
Number of Teeth	Multiply pitch diameter by 3.1416 and divide the product by circular pitch	$N = \frac{3.1416\,D}{P'}$
Outside Diameter	Add two times the addendum to the pitch diameter	$O = D + 2\ S$
Length of Rack	Multiply the number of teeth in the rack by circular pitch	$L = NP'$

Comparative Table of Circular and Diametral Pitch

Table No. 1 shows the diametral pitches with the corresponding circular pitches.

Table No. 2 shows the circular pitches with the corresponding diametral pitches.

Table No. 1		Table No. 2	
Diametral Pitch	Circular Pitch	Circular Pitch	Diametral Pitch
2	1.571 in.	2 in.	1.571
2¼	1.396	1 7/8	1.676
2½	1.257	1¾	1.795
2¾	1.142	1 5/8	1.933
3	1.047	1½	2.094
3½	.898	1 7/16	2.185
4	.785	1⅜	2.285
5	.628	1 5/16	2.394
6	.524	1¼	2.513
7	.449	1 3/16	2.646
8	.393	1⅛	2.793
9	.349	1 1/16	2.957
10	.314	1	3.142
11	.286	15/16	3.351
12	.262	⅞	3.590
14	.224	13/16	3.867
16	.196	¾	4.189
18	.175	11/16	4.570
20	.157	⅝	5.027
22	.143	9/16	5.585
24	.131	½	6.283
26	.121	7/16	7.181
28	.112	⅜	8.378
30	.105	5/16	10.053
32	.098	¼	12.566
36	.087	3/16	16.755
40	.079	⅛	25.133
48	.065	1/16	50.266

Metric or Module System of Gear Teeth. The metric system of measurement does not use diametral pitches, but instead, the dimensions of gear teeth are expressed by reference to the MODULE of the gear. The module is equal to the pitch diameter in

millimeters divided by the number of teeth in the gear. For example, if the pitch diameter of a gear is 50 millimeters and the number of teeth 25, then the module equals 50 ÷ 25 = 2. The accompanying table gives a comparison between diametral, circular and metric pitches, together with their decimal equivalents. To convert module or metric (for example M 2) into the equivalent diametral pitch, proceed as follows:

M 2 = .247″, or in other words, it is the same as a circular pitch of .247″.

$$P = \frac{3.1416}{P' \text{ in Inches}} \qquad \therefore \qquad P = \frac{3.1416}{.247} = 12.70.$$

Comparative Table of Diametral, Metric and Circular Pitches with Decimal Equivalents

$$\text{Diametral Pitch, } P = \frac{\text{Number of Teeth}}{\text{Pitch Diameter in Inches}} = \frac{3.1416}{\text{Circular Pitch in Inches}}$$

$$\text{Module} = \frac{\text{Pitch Diameter in Millimeters}}{\text{Number of Teeth}} = \frac{\text{Circular Pitch in Millimeters}}{3.1416}$$

$$\text{Circular Pitch, } P' = \frac{\text{Pitch Diameter in Inches} \times 3.1416}{\text{Number of Teeth}} = \frac{3.1416}{\text{Diametral Pitch in Inches}}$$

Diametral Pitch	Module	Circular Pitch	Decimal Equivalent	Diametral Pitch	Module	Circular Pitch	Decimal Equivalent	Diametral Pitch	Module	Circular Pitch	Decimal Equivalent
26	.....	.....	.121	.....	2¾	.....	.340	.....	7	.....	.866
.....	1	.....	.124	.....	.....	11/32	.344	.....	.....	⅞	.875
.....	.....	⅛	.125	9	.....	.....	.349	3½	.....	.....	.898
24	.....	.....	.131	.....	3	.....	.371	.....	8	.....	.989
22	.....	.....	.143	.....	.....	⅜	.375	.....	.....	1	1.000
.....	1¼	.....	.155	8	.....	.....	.393	3	.....	.....	1.047
.....	.....	9/32	.156	.....	3½	.....	.433	.....	9	.....	1.113
20	.....	.....	.157	.....	.....	7/16	.437	.....	.....	1⅛	1.125
18	.....	.....	.175	7	.....	.....	.449	2¾	.....	.....	1.142
.....	1½	.....	.185	.....	4	.....	.495	.....	10	.....	1.237
.....	.....	5/16	.187	.....	.....	½	.500	.....	.....	1¼	1.250
16	.....	.....	.196	6	.....	.....	.524	2½	.....	.....	1.257
.....	1¾	.....	.216	.....	4½	.....	.556	.....	11	.....	1.360
.....	.....	7/32	.219	.....	.....	9/16	.562	.....	.....	1⅜	1.375
14	.....	.....	.224	5½	.....	.....	.571	2¼	.....	.....	1.396
.....	2	.....	.247	.....	5	.....	.618	.....	12	.....	1.484
.....	.....	¼	.250	.....	.....	⅝	.625	.....	.....	1½	1.500
12	.....	.....	.262	5	.....	.....	.628	2	.....	.....	1.571
.....	2¼	.....	.278	.....	5½	.....	.680	.....	14	.....	1.732
.....	.....	9/32	.281	.....	.....	11/16	.687	.....	.....	1¾	1.750
11	.....	.....	.286	4½	.....	.....	.698	1¾	.....	.....	1.795
.....	2½	.....	.309	.....	6	.....	.742	.....	16	.....	1.979
.....	.....	5/16	.312	.....	.....	¾	.750	.....	.....	2	2.000
10	.....	.....	.314	4	.....	.....	.785	1½	.....	.....	2.094

Table for Cutting Racks

(Using the Table Feed Screw for making divisions.)

Pitch 2		Pitch 2¼		Pitch 2½		Pitch 2¾		Pitch 3		Pitch 3½		Pitch 4		Pitch 5		Pitch 6		Pitch 7		Pitch 8		Pitch 9	
Rev.	Thousandths	Rev.	Thousandths	Rev.	Thousandths	Rev.	Thousandths	Rev.	Thousandths	Rev.	Thousandths	Rev.	Thousandths	Rev.	Thousandths	Rev.	Thousandths	Rev.	Thousandths	Rev.	Thousandths	Rev.	Thousandths
6	71	5	146	5	7	4	142	4	47	3	148	3	35	2	128	2	24	1	199	1	143	1	99
6	142	5	42	5	14	4	34	4	94	3	46	3	70	2	6	2	48	1	148	1	36	1	198
6	213	5	188	5	21	4	176	4	141	3	194	3	105	2	134	2	72	1	97	1	179	1	47
6	34	5	84	5	28	4	68	4	188	3	92	3	140	2	12	2	96	1	46	1	72	1	146
6	105	5	230	5	35	4	210	4	235	3	240	3	175	2	140	2	120	1	245	1	215	1	245
6	176	5	126	5	42	4	102	4	32	3	138	3	210	2	18	2	144	1	194	1	108	1	94
6	247	5	22	5	49	4	244	4	79	3	36	3	245	2	146	2	168	1	143	1	1	1	193
6	68	5	168	5	56	4	136	4	126	3	184	3	30	2	24	2	192	1	92	1	144	1	42
6	139	5	64	5	63	4	28	4	173	3	82	3	65	2	152	2	216	1	41	1	37	1	141
6	210	5	210	5	70	4	170	4	220	3	230	3	100	2	30	2	240	1	240	1	180	1	240

DIRECTIONS. For example: To cut a 9-pitch rack, adjust the work to the cutter and set the micrometer dial of the lead screw to zero.

For the next tooth turn the lead screw crank through one complete revolution plus an additional amount until the micrometer dial reads 99 thousandths. For the following tooth turn the lead screw crank through one revolution and continue until the micrometer reads 198 thousandths, and so on until you reach the last number in above table; then without moving the lead screw set the micrometer dial to zero and commence over again, continuing as before.

To cut a 4-pitch rack the first spacing is 3 revolutions, 35 thousandths; the second 3 revolutions, and pass on to 70 thousandths and so on.

Table for Cutting Racks—Continued

(Using the Table Feed Screw for making divisions.)

Pitch 10		Pitch 11		Pitch 12		Pitch 14	Pitch 16	Pitch 18	Pitch 20	Pitch 22	Pitch 24	Pitch 26	Pitch 28	Pitch 30	Pitch 32	Pitch 36	Pitch 40	Pitch 48
Rev.	Thousandths	Rev.	Thousandths	Rev.	Thousandths	Thousandths	Thousandths	Thousandths	Thousandths	Thousandths	Thousandths	Thousandths	Thousandths	Thousandths	Thousandths	Thousandths	Thousandths	Thousandths
1	64	1	36	1	12	224	196	175	157	143	131	121	112	105	98	87	79	65
1	128	1	72	1	24	198	142	100	64	36	12	242	224	210	196	174	159	130
1	192	1	108	1	36	172	88	25	221	179	143	113	86	65	44	11	237	195
1	6	1	144	1	48	146	34	200	128	72	24	234	198	170	142	98	66	10
1	70	1	180	1	60	120	230	125	35	215	155	105	60	25	240	185	145	75
1	134	1	216	1	72	94	176	50	192	108	36	226	172	130	88	22	224	140
1	198	1	2	1	84	68	122	225	99	1	167	97	34	235	186	109	53	205
1	12	1	38	1	96	42	68	150	6	144	48	218	146	90	34	196	132	20
1	76	1	74	1	108	16	14	75	163	37	179	89	8	195	132	33	211	85
1	140	1	110	1	120	240	210	250	70	180	60	210	120	50	230	120	40	150

DIRECTIONS. For example: To cut a 32-pitch rack, adjust the work to the cutter and set the micrometer dial of the lead screw to zero.

For the next tooth turn the lead screw crank until the micrometer reads 98 thousandths; for the following tooth continue to turn until the reading is 196 thousandths, for the next, 44 thousandths and so on until you reach the last number in above table; then without moving the lead screw set the micrometer to zero, and commence over again, continuing as before.

For a pitch requiring one or more than one revolution of the screw, follow instructions given on preceding page.

Table for Cutting Racks—Continued

(Using the Cross Screw for making divisions.)

Pitch 2		Pitch 2¼		Pitch 2½		Pitch 2¾		Pitch 3		Pitch 3½		Pitch 4		Pitch 5	
Rev.	Thousandths	Rev.	Thousandths	Rev.	Thousandths	Rev.	Thousandths	Rev.	Thousandths	Rev.	Thousandths	Rev.	Thousandths	Rev.	Thousandths
7	171	6	196	6	57	5	142	5	47	4	98	3	185	3	28
7	142	6	192	6	114	5	84	5	94	4	196	3	170	3	56
7	113	6	188	6	171	5	26	5	141	4	94	3	155	3	84
7	84	6	184	6	28	5	168	5	188	4	192	3	140	3	112
7	55	6	180	6	85	5	110	5	35	4	90	3	125	3	140
7	26	6	176	6	142	5	52	5	82	4	188	3	110	3	168
7	197	6	172	6	199	5	194	5	129	4	86	3	95	3	196
7	168	6	168	6	56	5	136	5	176	4	184	3	80	3	24
7	139	6	164	6	113	5	78	5	23	4	82	3	65	3	52
7	110	6	160	6	170	5	20	5	70	4	180	3	50	3	80

Pitch 6		Pitch 7		Pitch 8		Pitch 9		Pitch 10		Pitch 11		Pitch 12		Pitch 14	
Rev.	Thousandths	Rev.	Thousandths	Rev.	Thousandths	Rev.	Thousandths	Rev.	Thousandths	Rev.	Thousandths	Rev.	Thousandths	Rev.	Thousandths
2	124	2	49	1	193	1	149	1	114	1	86	1	62	1	24
2	48	2	98	1	186	1	98	1	28	1	172	1	124	1	48
2	172	2	147	1	179	1	47	1	142	1	58	1	186	1	72
2	96	2	196	1	172	1	196	1	56	1	144	1	48	1	96
2	20	2	45	1	165	1	145	1	170	1	30	1	110	1	120
2	144	2	94	1	158	1	94	1	84	1	116	1	172	1	144
2	68	2	143	1	151	1	43	1	198	1	2	1	34	1	168
2	192	2	192	1	144	1	192	1	112	1	88	1	96	1	192
2	116	2	41	1	137	1	141	1	26	1	174	1	158	1	16
2	40	2	90	1	130	1	90	1	140	1	60	1	20	1	40

Table for Cutting Racks—Continued

(Using the Cross Screw for making divisions.)

Pitch 16	Pitch 18	Pitch 20	Pitch 22	Pitch 24	Pitch 26	Pitch 28	Pitch 30	Pitch 32	Pitch 36	Pitch 40	Pitch 48
Thousandths	Thousandths	Thousandths	Thousandths	Thousandths	Thousandths	Thousandths	Thousandths	Thousandths	Thousandths	Thousandths	Thousandths
196	175	157	143	131	121	112	105	98	87	79	65
192	150	114	86	62	42	24	10	196	174	158	130
188	125	71	29	193	163	136	115	94	61	37	195
184	100	28	172	124	84	48	20	192	148	116	60
180	75	185	115	55	5	160	125	90	35	195	125
176	50	142	58	186	126	72	30	188	122	74	190
172	25	99	1	117	47	184	135	86	9	153	55
168	0	56	144	48	168	96	40	184	96	32	120
164	175	13	87	179	89	8	145	82	183	111	185
160	150	170	30	110	10	120	50	180	70	190	50

DIRECTIONS.—For example: To cut a 16-pitch rack, adjust the work to the cutter and set the micrometer dial of cross screw to zero. For the next tooth turn the cross screw crank until the micrometer reads 196 thousandths; for the following tooth continue to turn until the reading is 192 thousandths; and so on until you reach the last number in the above table; then without moving the cross screw set the micrometer dial to zero, and commence over again, continuing as before. For cases in which one or more revolutions are required, make the number of revolutions and the necessary number of thousandths beyond for each tooth, as shown in the table. For example: To cut a 3-pitch rack. Adjust the work to the cutter and set the micrometer dial on the cross screw to zero. Then mill the first tooth. For the next tooth, turn the cross screw crank through five complete revolutions, plus an additional amount until the micrometer dial reads 47 thousandths. When this tooth has been cut, index for the next tooth by turning the cross screw crank through five complete revolutions again and continue until the micrometer dial reads 94 thousandths. For the next spacing make five revolutions of the crank and continue around until the micrometer dial reads 141 thousandths, and so on.

Indexing Table for Use in Connection with Rack Indexing Attachment for Cone-Driven Millers

DIAMETRAL				CIRCULAR			
Diametral Pitch	Gear on Stud	Gear on Crank Shaft	Turns of Index Plate	Circular Pitch	Gear on Stud	Gear on Crank Shaft	Turns of Index Plate
4	88	28	Whole	3/4	84	28	Whole
5	88	35	Whole	11/16	77	28	Whole
6	88	42	Whole	5/8	70	28	Whole
7	88	49	Whole	9/16	63	28	Whole
8	88	56	Whole	1/2	56	28	Whole
9	88	63	Whole	7/16	98	56	Whole
10	88	70	Whole	2/5	56	35	Whole
11	88	77	Whole	3/8	84	56	Whole
12	88	84	Whole	1/3	56	42	Whole
13	88	91	Whole	5/16	70	56	Whole
14	88	98	Whole	2/7	56	49	Whole
15	88	105	Whole	1/4	84	42	Half
16	44	56	Whole	1/5	56	70	Whole
18	88	63	Half	3/16	42	56	Whole
20	88	70	Half	1/6	56	84	Whole
22	88	77	Half	1/7	56	98	Whole
24	88	84	Half	1/8	28	56	Whole
26	88	91	Half	1/16	28	56	Half
28	88	98	Half				
30	88	105	Half				
32	44	56	Half				

Indexing Table for Use in Connection with Rack Indexing Attachment for All Millers of High-Power Design

DIAMETRAL				CIRCULAR			
Diametral Pitch	Gear on Stud	Gear on Crank Shaft	Turns of Index Plate	Circular Pitch	Gear on Stud	Gear on Crank Shaft	Turns of Index Plate
4	88	56	Whole	3/4	84	56	Whole
5	88	70	Whole	11/16	77	56	Whole
6	44	42	Whole	5/8	70	56	Whole
7	44	49	Whole	9/16	63	56	Whole
8	44	56	Whole	1/2	88	44	Half
9	44	63	Whole	7/16	49	56	Whole
10	44	70	Whole	2/5	56	70	Whole
11	44	77	Whole	3/8	42	56	Whole
12	44	84	Whole	1/3	56	42	Half
13	44	91	Whole	5/16	70	56	Half
14	44	98	Whole	2/7	56	49	Half
15	44	105	Whole	1/4	42	84	Whole
16	33	84	Whole	1/5	56	70	Half
18	44	63	Half	3/16	42	56	Half
20	44	70	Half	1/6	56	84	Half
22	44	77	Half	1/7	56	98	Half
24	44	84	Half	1/8	42	84	Half
26	44	91	Half				
28	44	98	Half				
30	44	105	Half				
32	33	84	Half				

CHAPTER XV

SHOP TRIGONOMETRY—BEVEL GEARS

The name Trigonometry has a formidable sound to those who have had no special training in this branch of mathematics, but whose work frequently requires them to use it in their everyday shop work. It is intended here to cover only enough ground, and that in simple language, to enable anyone with a knowledge of arithmetic to solve the ordinary shop problems involving angles, and we have, therefore, headed this chapter Shop Trigonometry. This word is composed of two other words, which translated in their proper order mean—triangle measurement. In other words, trigonometry is simply the measurement of triangles.

The basis of all the computations is the circle, which, as we all know, is divided into 360 divisions called degrees.

1 degree = 60 minutes.
1 minute = 60 seconds.

In all mathematical calculations, the following symbols are used:

° = degrees, thus 3 degrees = 3°
′ = minutes, thus 5 minutes = 5′
″ = seconds, thus 12 seconds = 12″

which is written 3°5′12″, and reads "three degrees, five minutes, twelve seconds."

The Right Angle Triangle. Of all the different triangles we can make the right angle triangle lends itself best to simple calculations by means of trigonometry.

One of the first things to be remembered is that the sum of the three angles of a triangle is 180°. A right angle triangle is a triangle, one of whose angles is a right angle. If one of the angles of a triangle is a right angle, or 90°, then the sum of the other two angles must also be 90°, because the sum of all the angles is 180°.

From this we always know that one angle of the right angle triangle is 90°. If we know a second angle it is an easy matter to

figure the third. If, for instance, a right angle triangle has an angle of 30°, then there must be another angle of 60°. The way we would figure is simply this: The three angles together are 180°. One of them, the right angle, has 90°. This leaves 90° for the other two angles. One of these two is 30°. Therefore the other must be 90° − 30° = 60°.

If we know that the line BC in the drawing ABC (Fig. 234) is 16″ long, and that AC is half as long as BC, then we know that AC must be 8″. This is trigonometry. Trigonometry simply gives the proportion or ratio between the sides of right angle triangles, and the problem of trigonometry is simply to find one of the sides when you already know another side and the proportion between these two.

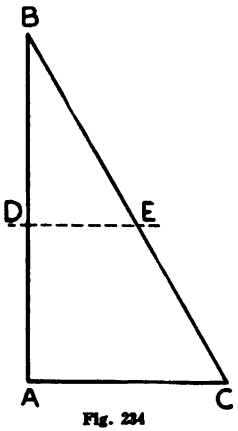

Fig. 234

If we draw a line DE parallel with AC, then BE will be twice as long as DE because BC is twice as long as AC, and if we had drawn DE somewhere else this same thing will hold true. If BC were twenty times as long as AC, BE would also be twenty times as long as DE. Any proportion which may exist between BE and DE remains unaltered no matter where we draw the line DE. This proportion is not changed SO LONG AS WE DO NOT CHANGE THE ANGLE AT B.

Very complete tables have been made which give the proportion between AC and BC for any size of angle B. For a certain angle this proportion may be one-half, for another it may be one-third, for still another seven-eighths, for still another .4635, and so on. If you know that BC is 16″ and you want to find AC, you will naturally want to know first what is the proportion between AC and BC. If you learn this proportion is one-half, you multiply 16 by one-half and find that 8 is the length of AC. If you know that the proportion is .4635, you multiply 16 by .4635 and find 7.4160 is the length of AC. If you do not know the proportion between AC and BC, but instead, know the size of the angle B, you refer to the tables and find what the proportion is for this angle and then multiply 16 by that figure, the same as before. In other words, knowing the size of the angle is just as good as knowing the proportion, provided you have the table. If you know the proportion and want to know what the angle B is, you can, of course, find it in the same way by using the same table.

These tables not only give you the proportion between AC and BC when you know the angle B, but they also give you the proportion between AB and BC. They also give you the proportions between AB, AC, between AC, AB, between BC, BA and between BC, AC. Six of these proportions are given in the table, and a single multiplication will give you at once any of the sides of a right angle triangle if any of the other sides is given, or if you know one of the angles.

Definitions of Sine, Tangent, etc.* Trigonometry would not seem so formidable if its terms were given in English instead of Greek and Latin words. "Measuring triangles" sounds much simpler than "Trigonometry," but it means the same thing. We find in the tables the terms: Sine, Cosine, Tangent, Cotangent, Secant and Cosecant. These words do not describe anything that

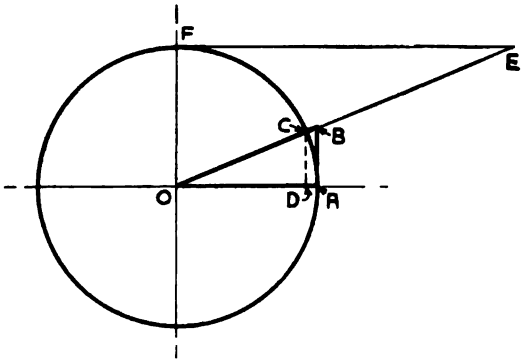

Fig. 235

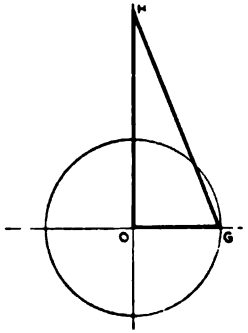

Fig. 236

*It has been customary to teach trigonometry by showing the angle as made by two radii of a circle in which the length of the radius = 1″ (see Fig. 235). It is possible to show angle AOB by the two radii CO and AO. If we drop the perpendicular CD on the line AO, and if we further assume that the radius OC of the circle is 1″ in length, then the line CD is the sine of the angle COD, and OD is the cosine of this angle. If we erect a perpendicular at the point A, then this line will intersect the extension of the radius OC at the point B. In this case the radius AO is 1″ in length, and the line AB is the tangent of the angle AOB. In the same manner the line EF is the cotangent of the angle AOB. These lines are tangents to the circle, and their length is determined by the points where these tangents intersect the legs of the given angle. This is the reason why the proportions mentioned are called the tangent and cotangent of the given angle.

In Fig. 236 the radius OG is again 1″, and the intersecting line, or secant, HG, is as many inches long as the value of the secant of the angle OGH.

we are familiar with in everyday life and they do not mean anything to us because we do not understand them. They can, however, be readily translated into their English equivalents, which are words that we are familiar with, and the whole matter at once becomes simpler.

Sine originally meant the string of a bow, or the chord of an arc of a circle, and in its present use in trigonometry, the angle subtended by that arc; therefore, so far as we are concerned, "sine" means simply "angle." What we find in the table under the heading Sine, is simply the proportion between two sides of the triangle for a given sine or angle.

Cosine.—We saw above that if one angle is 30° the other angle must be 90° − 30° = 60°. These angles of 30° and 60° are said to be each other's complement; so are 10° and 80°; so are 17° and 73°. When the sum of any two angles is 90°, they are complementary angles. Therefore, in a right angle triangle the angles at B and C (Fig. 234) are always complementary angles.

Cosine is an abbreviation or contraction for "complement sine," and simply means the sine of the complement angle. For instance, the Cosine of 30° is the same as the Sine of 60°; the Cosine of 10° is the Sine of 80° and, of course, vice versa, the Cosine of 60° is the Sine of 30°, and the Cosine of 80° is the Sine of 10°, and so on.

Tangent, a word which you also find in the table, means just exactly what tangent has always meant to you: a line which touches a circle at one point.

Cotangent simply means "complement tangent," or the tangent of the complement angle, so that the Cotangent of 30° is the Tangent of 60° and vice versa.

Secant means a line which intersects a circle. You will recognize the same root in the words "secant" and "intersect." Cosecant means again the "complement secant" or secant of the complement angle.

Trigonometry Expressed as Proportion. After this short explanation we are ready to proceed. The proportion between AC and BC, Fig. 234, can be, and in mathematical equations is, written $\frac{AC}{BC}$. If BC is 16 and AC is 8, then $\frac{AC}{BC} = \frac{8}{16} = \frac{1}{2}$, which is in exact

accordance with our first assumption. In the triangle ABC, $\frac{AC}{BC}$ is the Sine of the angle B. The Sine and the Tangent are the two terms which are most used and we want to emphasize here that for both these terms we must always look to that side of the triangle which is opposite the given angle. If we have the angle B, then we must look for line AC. This is the Sine of the angle B and is a fraction of which the line opposite the angle B is the numerator and the hypotenuse is the denominator. The Sine of angle B is therefore $\frac{AC}{BC}$. If we have the angle C we must look for the line AB. The Sine of angle C is therefore $\frac{AB}{BC}$.

The only difference in the fractions which represent the Sine and the Tangent of an angle lies in the denominator of the fraction. For the Sine this denominator is the hypotenuse, but for the Tangent it is the other right angle side, so that the Tangent of angle B is $\frac{AC}{AB}$ and the Cotangent is $\frac{AB}{AC}$.

Sine B equals	$\frac{AC}{BC}$	*Cotangent B equals*	$\frac{AB}{AC}$
Cosine B equals	$\frac{AB}{BC}$	*Secant B equals*	$\frac{BC}{AB}$
Tangent B equals	$\frac{AC}{AB}$	*Cosecant B equals*	$\frac{BC}{AC}$

It will be seen that the Cosecant is the inverted value of the Sine, the Secant is the inverted value of the Cosine, and the Cotangent is the inverted value of the Tangent. In other words, the sine multiplied by the cosecant equals 1; and similarly, the tangent multiplied by the cotangent equals 1; and the secant multiplied by the cosine equals 1. This is not merely a curiosity, but it can be

made a great help in the calculations, as it enables us to multiply instead of divide, and it is much easier to multiply by a large number than to divide by it. If, for instance, we find that we have to divide by the sine of a certain angle, it is advisable to not do it, but instead, find in the tables the cosecant of the same angle and multiply by it.

Another one of the properties of these values worth noticing is that we can find without referring to the tables some of these values, if some others are known. For instance, if we know the sine and cosine, we can find the tangent and all the other values, thus:

$$\frac{\sin B}{\cos B} = \frac{\frac{AC}{BC}}{\frac{AB}{BC}} = \frac{AC}{AB} = \tan B$$

similarly

$$\frac{\cos B}{\sin B} = \frac{\frac{AB}{BC}}{\frac{AC}{BC}} = \frac{AB}{AC} = \text{cotan B, and so on.}$$

If we want to make free use of trigonometry there is just one thing that we must do: Learn by heart the tabulation given above, and learn it so that we know it as well as the alphabet or the multiplication table. Outside of this there is nothing to be learned for right angle triangles except some practice in handling the tables. This practice will come only by DOING the thing and doing it often.

How to Use Trigonometric Tables. If in Fig. 234 angle ABC is 30°, what is the value of its sine?

Referring to the table of sines and cosines, etc., page 396 in the column headed 30°, under the word sine, opposite 0, we find .50000, which means than sin 30°0′ = .50000 or ½. That is exactly what we found to be the value of the proposition $\frac{AC}{AB}$ in our first assumption when AC = 8 and AB = 16.

Now suppose our angle is 30°19′: We follow down the sine column under 30° and find opposite 19, AT THE LEFT HAND MARGIN

OF THE TABLE, the value .50478. Therefore, we know that sin 30°19′ = .50478.

If we are seeking the value of the cosine we simply follow the above instructions, but look for our values in the column headed cosine, thus, cos 30°19′ = .86325. In exactly the same way we can pick out of the table, the tangent secant and all the other functions.

However, it will be seen that the tables go only as far as 44°60′, and we may want the function of an angle somewhere between 45° and 90°.

It was shown previously that the cosine is the same as the sine of the complementary angle, the cotangent is the tangent of the complementary angle, etc. This fact has been taken advantage of in preparing the tables. Therefore, when we want the function of an angle larger than 45°, we READ UP; example, sine 46°22′, on the bottom of the table page 400 we see 46°; the columns above this are designated cosine, sine, etc. Following up the sine column we find the value opposite the figure 22 AT THE RIGHT-HAND MARGIN of the table is .72377. Therefore, sin 46°22′ = .72377, and so on.

Bevel Gears: Application to a Shop Problem. To show how simple calculations are when carried out by trigonometry, we will calculate all the elements of a pair of bevel gears,* which run at

*Bevel gears are gears which connect shafts, the axes of which intersect each other. The point of intersection is called the apex. If we should locate a wire at the apex and make it follow the outline of the bevel gear, this wire would describe a cone. Part of this cone is the bevel gear. A bevel gear may therefore be considered as a truncated cone. If we place ourselves behind the bevel gear cone it will appear to us as a circle. If we cut a pair of bevel gears through their axes the section will appear as in Fig. 237. O is the apex of both gears. The circle we would see when looking at the small gear cone would be the circle with AB as radius. This would be the pitch circle of the small gear.

Bevel gears might be considered as being cut out of a sphere. We might imagine ourselves placed in the center of the sphere, and from there cut out sectors by means of a wire moving in a circle. Each sector would be the cone out of which we can make a bevel gear. If two sectors touch each other, then we have two bevel gears which will work together. Such a section of the sphere would appear on the outside of that sphere as a circle. These circles might be of various sizes, and the largest circle we could possibly get on that sphere would be the circle lying in a plane going through its center. Such a circle is commonly called a GREAT CIRCLE OF THAT SPHERE. If such a great circle is used as the pitch circle of a bevel gear, the gear is called a crown gear. If we

right angles to each other and of which only the number of teeth and pitch are given. Fig. 237 shows these bevel gears in section.

The large gear has 42 teeth, the small gear has 19 teeth, both 5 pitch. We will first calculate the pitch angle, or, as it is sometimes called, the cone angle. The pitch angle for the pinion is AOB and for the gear AOC. Notice that in triangle AOB, AB is half the pitch diameter of the pinion, and OB, being equal to AC, is half the pitch diameter of the gear. We find the tangent of the angle AOB by dividing AB by OB. We really do not have to figure out AB and OB to do this; all we need to do is to divide the number of teeth of the gear into the number of teeth of the pinion, but as we wish to know the diameters of the gears anyhow, we will overlook this little short cut.

The pitch diameter of the gear is $\frac{\text{number of teeth}}{\text{pitch}} = \frac{42}{5} = 8.4''$.

Half this diameter, or the radius, is 4.2″. The pitch diameter of the pinion is $\frac{19}{5} = 3.8''$. Its radius is half as much, or 1.9″. The tangent of angle AOB is $\frac{1.9}{4.2}$. We see at once that the answer would have been the same if we had divided the number of teeth of the gear into the number of teeth of the pinion. This tangent we find to be

---

should take a section through two bevel gears which work at right angles to each other, then we would get a right angle triangle. Fig. 237 shows such a triangle. The diameter AP of the small gear is one right angle side, the diameter AQ of the other gear is the other right angle side, and the line PQ is the hypotenuse. This line PQ would be the diameter of A GREAT CIRCLE OF THE SPHERE and would, therefore, be the diameter of the crown gear.

As with spur gears, so it has been deemed advisable to select a system of tooth shapes by which gears which are cut out of one and the same sphere will properly run together. The system selected is that by which the teeth of a crown gear have straight sides like rack teeth in a spur gear system. Based on this peculiarity is a system of cutting bevel gears by means of a generating machine and a tool having the shape of a rack tooth. Such a generating machine, operating with such a tool, will produce a theoretically correct bevel gear. Relatively few shops possess a bevel gear generating machine, and therefore, cut such gears with a rotary cutter as when done on a milling machine.

.45238, and we find from the table that the angle must be 24°20′. We might calculate the angle AOC in the same way by dividing the radius of the pinion into the radius of the gear, and this would give the tangent of the angle AOC, but this is not necessary, because the angles AOB and AOC together make 90° and are therefore

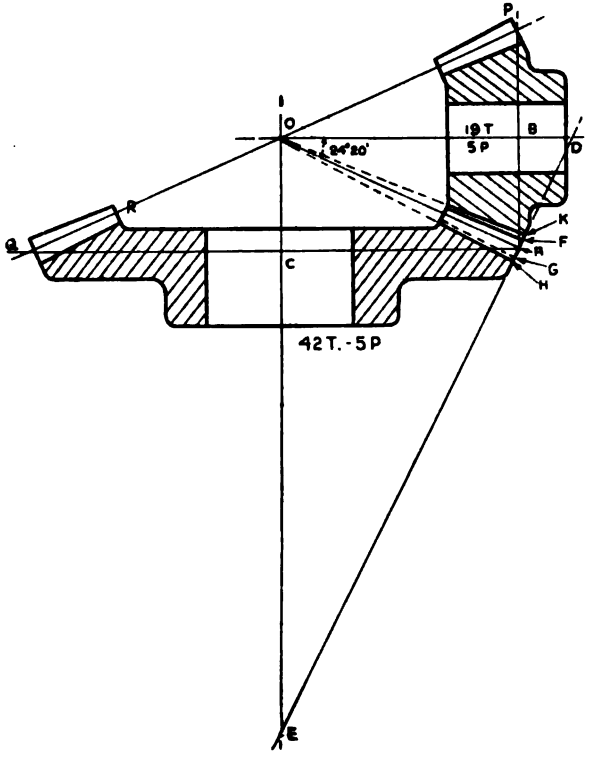

Fig. 227

complements of each other, so that if angle AOB is 24°20′, the angle AOC must be what there is left of the right angle, or 90° − 24°20′ = 65°40′.

For many purposes, though not for all, it is desirable to know the line AO, which is called the pitch cone radius. Looking again at angle AOB, we see that $\frac{AO}{AB}$ is the cosecant of AOB. If, therefore, we wish to find the line AO, we must multiply AB by the cosecant of angle AOB. We proceed thus:

AB × cosec AOB = AO. Substituting our values, we get 1.9 × cosec 24°20′ = AO.

From the tables we find cosec 24°20′ = 2.4269. We then have 1.9 × 2.4269 = 4.61111. The length of AO is therefore 4.61111″.

From the chapter on cutting spur gears we see that the line AF, which is the height of tooth above the pitch line and is called the addendum, is 1 divided by the pitch, $\frac{1}{P}$; in this case $\frac{1}{5}$. This is also the value of the line AG, the addendum of the pinion.

Since the addendum and dedendum are equal and since their sum is the working depth, we see that the line FG is the working depth of both gear and pinion. The space between this working depth and the whole depth is the clearance = $\frac{0.157}{P} = \frac{0.157}{5} =$ .0314 and since AF = AG = dedendum = $\frac{1}{P} = \frac{1}{5} = .2$ we find that AH = AK = .2 + .0314 = .2314″. This is the depth of the tooth below the pitch line. The whole depth, that is, the depth to be cut in the gear is the above + the addendum, or .2314 + .2 = .4314″.

However, what we are really after is the angle AOK, as well as the angle AOH. Of course these two angles are alike. We are also interested in the angles AOG and AOF, which are also alike. If we once have these angles it will be a simple matter to find the angle FOC, which is the turning angle for the gear and HOC, which is the cutting angle for the gear; and it will be just as easy to find the angle GOB, the turning angle for the pinion and KOB, the cutting angle for the pinion.

To find the angle AOG: We already know the length of the lines AG and AO in this triangle. Dividing one into the other we get the proportion $\frac{AO}{AG}$ = cotan AOG.

$$\frac{AO}{AG} = \frac{4.61111}{.2} = 23.0555 = \text{cotan AOG},$$

therefore, by consulting the tables we find AOG = 2°23′, and AOF = 2°23′ also.

In the same way:

$$\text{Cotan AOH} = \frac{\text{AO}}{\text{AH}} = \frac{4.61111}{.2314} = 19.927,$$

therefore, AOH = 2°59′ and AOK = 2°59′ also.

The turning angle for the pinion is, therefore, the pitch cone angle AOB + the angle AOG, that is,

$$24°20' + 2°23' = 26°43'$$

and the cutting angle of the pinion is AOB − AOK, that is,

$$24°20' - 2°59' = 21°21'.$$

In the same way by using the angle AOC of the gear, we find the turning and cutting angles of the gear. Turning angle of gear = 65°40′ + 2°23′ = 68°3′. Cutting angle of gear = 65°40′ − 2°59′ = 62°41′.

Outside Diameter of the Blank. The preceding data give the various angles of the blank, but it remains to compute the outside diameter O. This is derived from data already known, by following this rule:

Multiply the cosine of the pitch angle by twice the addendum and add to the pitch diameter, that is,

$$O = D + 2S \times \text{Cos}\infty.$$ Fig. 244

Selecting the Cutter. The best results are obtained if we select a cutter, not for the number of teeth that the gear is to have, but the proper cutter for an imaginary spur gear with an entirely different diameter, and consequently, with an entirely different number of teeth. The radius of our gear is AC, but the radius of the imaginary gear for which we select our cutter is AE. Similarly, the radius of the imaginary gear for the pinion is AD. If we know the length of the radius AE, then AE × 2 = diameter; diameter × 5 = number of teeth of the imaginary gear.

To find AE:

In triangle AOE, AO and angle AOE are known.

$$\text{Tan AOE} = \frac{\text{AE}}{\text{AO}}, \text{ therefore AE} = \text{tan AOE} \times \text{AO}.$$

AOE = 65°40′ and its tangent is 2.21132.
AO = 4.61111.

Therefore, the radius AE = 2.21132 × 4.61111 = 10.1966.

The diameter = 20.393 and the number of teeth is 5 × 20.393 = 101.96, or 102 teeth.

In a similar manner we find the length of the line DA, by multiplying the length of OA by the tangent of angle DOA, and find that AD equals 2.0852; the diameter of the imaginary gear for the pinion would be twice that much, or 4.1704, so that the number of teeth of this imaginary gear would be 20.85. We would therefore select a cutter suitable for 21 teeth and not for 19 teeth.

The preceding paragraphs will serve to show how simple and practical a tool trigonometry really is in solving ordinary shop problems, and also, the method followed in computing bevel gears. Practical rules and formulas for quick reference are given at the end of this chapter.

Cutting Bevel Gears. We are concerned here with cutting bevel gears with a rotary cutter on a Milling Machine. Such gears are of course not entirely correct in their tooth forms. This is not the fault of the milling machine but is due to the fact that the size and shape of a bevel gear tooth is different at every point throughout its length while the section through the tooth of a gear cutter can have only one size and shape. Such a cutter may be correct for any one section of the bevel gear tooth but can not possibly be correct for all, or even two of them.

While such gears may not be good enough for refined machinery, they are, in a great many cases satisfactory for all ordinary purposes.

The following will show how such gears may be cut as nearly correct as is practical with a rotary cutter on a milling machine.

The Shape of the Tooth. Fig. 238 shows a tooth of a Bevel Gear. The large outline is the shape of the tooth at the outer end of the gear, say Q (Fig. 237), and the smaller outline is the shape of the tooth at the inner end, R. When cutting a bevel gear on a milling machine, the dividing head is set in accordance with the

computed cutting angle for the gear, in other words so that the bottom of the tooth is horizontal. The line representing the bottom of the tooth passes through the apex of the cone and the cutter forms the outline APB, Fig. 238. This outline can be made so as

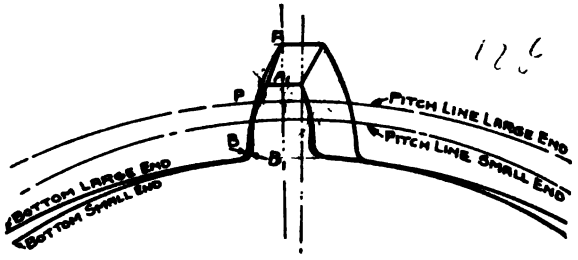

Fig. 238

to be correct for the large end of the tooth. The illustration shows at once that it is not correct for the small end of the tooth which should follow the outline APB_1. In order to make the gear more nearly correct, we would have to file some off the small end of the tooth at the top and fill it up slightly at the bottom. Such filling up is, of course, impossible. The filing off is quite commonly done with bevel gears made with a rotary cutter. The distance AA_1 is a measure of the amount we have to file off the top of the tooth. If we had selected a cutter that was not quite correct for the large end, nor for the small end, but for a point half way between, we would have had less to take off the top of the teeth, but the undercut at the bottom of the teeth would have been somewhat more pronounced. Ordinarily a cutter is selected which makes the correct shape at the large end of the teeth—and that for two main reasons. In the first place we can watch the action of two mating teeth at the large end, but at no other section. In the second place, the pressure at the large end causes the least wear and deformation of the teeth. Therefore, bevel gears are designed to have the pressure concentrated at that large end.

We have shown in a preceding paragraph how to select the cutter for a given pair of bevel gears. We found, for instance, that the large gear in Fig. 237 should be cut with a cutter that will cut a spur gear of 102 teeth. If the circular pitch of a bevel gear is 1″, then the thickness of the tooth on the pitch line at the large end is ½″, and therefore, the width of the space is also ½″. The cutter that would cut this space would be ½″ thick at the pitch line. If

this cutter were of a rectangular shape, as at A, Fig. 239, then it would cut a space through the bevel gear of even width throughout.

In other words, the space at the small end of the tooth would be exactly the same width as at the large end. Of course this would

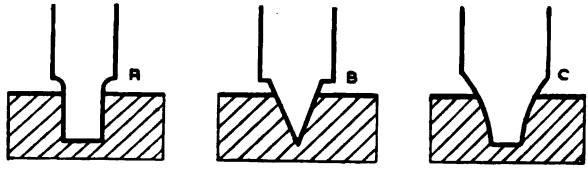

Fig. 239

not do, as this space must be proportionately smaller at the small end. In order to use a cutter of such a shape we must select one thin enough to pass through the tooth space at the small end. If the cutter were of the shape shown at B, Fig. 239, then it would automatically make a space of the proper width at any section of the tooth, and the flanks of all the teeth would converge properly toward the apex. Such a cutter might be used, for instance, for cutting saw-tooth clutches, and the bevel sides of these saw-tooth clutches would bear over their entire length. A cutter of the general shape as shown at C, Fig. 239, has some of the peculiarities of the square tooth A, and of the triangular tooth B. Consequently, we must select a cutter thinner than the width of the space at the large end; in fact, at least as thin as the width of space at the small end.

Tooth Elements. In Fig. 237 OQ is called the cone radius. OR is also a cone radius, but whereas OQ is the cone radius for the large end, OR is the cone radius for the small end. Thickness of tooth, pitch, height of tooth, in fact, all the elements of a tooth anywhere in the bevel gear are in direct proportion to the cone radii. If, for instance, OQ were twice as great as OR, then the pitch at Q would be twice as great as the pitch at R; the height of the tooth at Q would be twice as great as the height of the tooth at R, etc. If then, we know the pitch of a gear at the large end and the cone radii at the large and small ends, we can easily figure the pitch at the small end. If, for instance, we select the same elements of the gears as we found in Fig. 237, and make the face of the gear RQ equal 1″, then we find the following: OQ = OA = 4.611″. OR = OQ − 1″ = 3.611. The pitch at Q is 5, or, expressed as circular pitch,

.628″, and the pitch at R is found by multiplying this pitch at Q by 3.611 and dividing it by 4.611; that is

Pitch at small end $= \frac{OR}{OA} \times$ Circ. P. $= \frac{3.611}{4.611} \times .628 = .492$. This gives for the pitch at R .492″. We must then select a cutter which is not thicker than half this pitch at the height of the pitch line at R. Any cutter which is thinner will do, but a cutter which is thicker can not be used. In order to determine the correctness of the cutter we must measure it at its pitch line FOR THE SMALL END. Since all the tooth parts at the small end are in exact proportion to the cone radii, that is, diminished $\frac{3.611}{4.611}$, we first find the thickness at the pitch line of a cutter that would be correct for the large end only. We know that the CUTTER TOOTH has a height ABOVE the pitch line = dedendum + clearance.

Pitch = 5, therefore dedendum = .2.

Clearance $= \frac{0.157}{P} = \frac{0.157}{5} = .0314$, which added to the dedendum .2 gives us the pitch line .2314″ down from the top of the cutter tooth. For the small end then we have $.2314 \times \frac{3.611}{4.611} = .181''$.

We have already found that the pitch (circular) at the small end is .492, therefore the width of the tooth space at the small end is one-half this, or .246.

We now measure the cutter by setting a tooth gauge for a depth of .181″ and a width of .246″. The cutter must pass through this gauge; if not, it is too thick and we must select another cutter.

The whole depth to be cut in the gear at the large end is, addendum + dedendum + clearance = .2 + .2 + .0314 = .4314″, and at the small end $.4314 \times \frac{3.611}{4.611} = .3379''$.

We now know the whole depth of tooth spaces at both ends = .4314″ and .3379″. The thickness of the teeth at both ends = .314″ and .246″. The height of the teeth above the pitch line at both ends = .200 and .157. The cutting angle = 62°41′.

Setting the Machine. With the proper cutter in place on the arbor, we bring the milling machine table into such position that the cutter is exactly central with the dividing head spindle. Then with the gear blank securely held in place we set the dividing head to bring the gear to the proper cutting angle = 62°41′.

The swivel of the dividing head is graduated to read 0 with the spindle horizontal and therefore 90° when vertical. When set beyond the vertical position the graduations read in reverse order; that is, 80°, 70°, and so on; in other words, the complement of the angle beyond the vertical. This is done so that for any position of the dividing head spindle, whether ahead of, or past the vertical, the graduations will always show the angle which the spindle makes with the horizontal position. We, therefore, need merely swing the dividing head spindle past the vertical to 62°41′ and our gear blank is at the correct angle for taking the cut. It is shown in this position in Fig. 240.

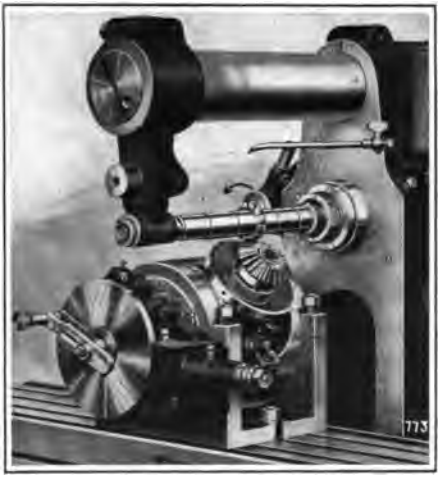

Fig. 240. Bevel Gear Cutting

It should be noted that the gear is always set at the angle past the vertical as of Fig. 240, so the direction in the cut will be away from instead of toward the dividing head spindle. One of the many advantages of the Cincinnati Dividing Head is that for such work it can be set past the vertical far enough to obtain the cutting angle for all bevel gears up to and including mitre gears.

With this setting made we set for depth of cut by the usual method of touching the cutter to the blank at the extreme edge of the large end of the tooth; i. e., the point of largest diameter of the gear, then raise the table the amount required for the whole depth; in the case of the above gear = .431. The exact relation of the cutter to the blank is shown in Fig. 241.

After having made this setting we take a central cut through each tooth space. This is not absolutely necessary, but it is recom-

mended here. If we were to attempt to mill the gear by taking only two cuts, the first cut would finish at once one side of a tooth, and we would then have considerable metal left to be removed when taking the final cut, finishing the side of the next tooth. This would

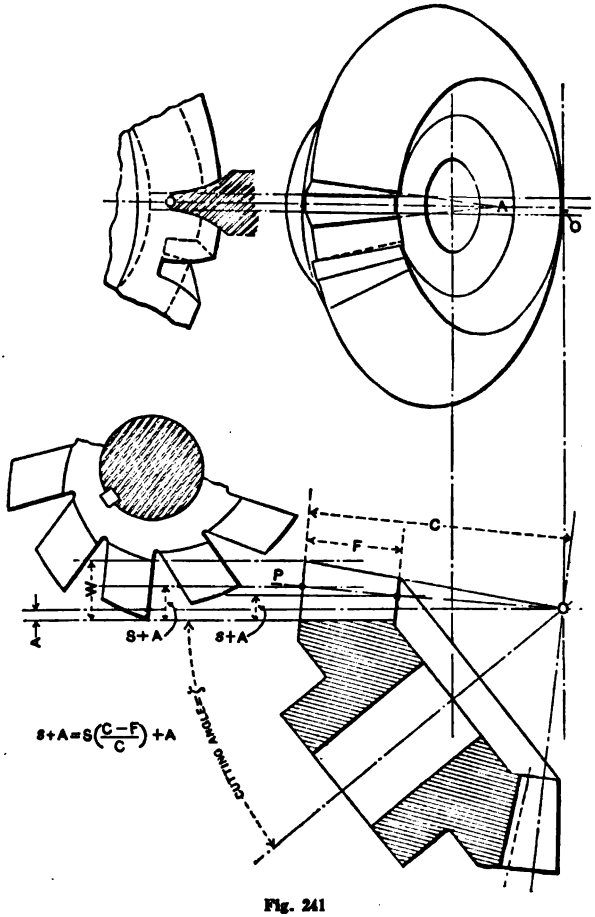

Fig. 241

tend to crowd the cutter to one side and would probably cause an unevenly cut gear. We therefore recommend taking first a central cut and then two finishing cuts, one on each side of the tooth space.

After having taken the first cut all around the gear it will be necessary to make certain adjustments of the blank in relation to the cutter in order to produce a tooth of the proper thickness and as

nearly as possible the correct form. Two things are necessary: the rotation of the blank and the offset; that is, setting the cutter out of center. We will first determine the amount of offset.

Computing the Offset. The formula quite generally used is:

$$O = \frac{T}{2} - \frac{R}{P}$$

in which O is the amount of offset.

T is the thickness of cutter tooth at the pitch line corresponding to the large end of the tooth.
R is the factor selected from the table.
P is the pitch of the gear.

The factor R is taken from the table for set-over. We must first find the value $\left(\frac{C}{F}\right)$ which is the ratio between the pitch cone radius and the face of tooth.

TABLE FOR OBTAINING SET-OVER FOR CUTTING BEVEL GEARS

No. of Cutter	Ratio of Pitch Cone Radius to Width of Face $\left(\frac{C}{F}\right)$												
	3/1	3 1/4 / 1	3 1/2 / 1	3 3/4 / 1	4/1	4 1/4 / 1	4 1/2 / 1	4 3/4 / 1	5/1	5 1/4 / 1	6/1	7/1	8/1
1	.254	.254	.255	.256	.257	.257	.257	.258	.258	.259	.260	.262	.264
2	.266	.268	.271	.272	.273	.274	.274	.275	.277	.279	.280	.283	.284
3	.266	.268	.271	.273	.275	.278	.280	.282	.288	.286	.287	.290	.292
4	.275	.280	.285	.287	.291	.293	.296	.298	.298	.302	.305	.308	.311
5	.280	.285	.290	.293	.295	.296	.298	.300	.302	.307	.309	.313	.315
6	.311	.318	.323	.328	.330	.334	.337	.340	.343	.348	.352	.356	.362
7	.289	.298	.308	.316	.324	.329	.334	.338	.343	.350	.360	.370	.376
8	.275	.286	.296	.309	.319	.331	.338	.344	.352	.361	.368	.380	.386

NOTE.—For obtaining set-over by above table, use this formula:

$$\text{Set-over} = \frac{T}{2} - \frac{\text{factor from table}}{P}$$

P = diametral pitch of gear to be cut.
T = thickness of cutter used, measured at pitch line

Now applying this to our gear: We have seen that we should use a cutter correct for 102 teeth. This is a No. 2 cutter. We will assume it to be .175 thick at the pitch line. The pitch cone radius is the line OC, Fig. 237, which we have found to be 4.6″ long. The face of the tooth is 1″. Therefore,

$$\frac{C}{F} = \frac{4.6}{1}.$$

The nearest figure to this in the table is $\frac{4.5}{1}$. We will use this.

From the table we find under $\frac{4.5}{1}$ and opposite 2, the factor .274.

We now have these values:

$$T = .175''.$$
$$R = .274.$$
$$P = 5.$$

Substituting, we have

$$O = \frac{.175}{2} - \frac{.274}{5} = .0875 - .0548 = .0327''.$$

This is the amount the cross slide must be adjusted.

We now proceed as follows: Set the cutter out of center the above amount by adjusting the cross slide, reading the setting from the dial. We must rotate the blank in the opposite direction from that in which we made the offset. This is shown in Fig. 242. If the blank has been offset to the right, it must be revolved to the left to bring the side of the tooth to be finished towards the corresponding side of the cutter again. The amount that the blank is revolved must be determined by trial, and is correct when a trial cut will cover the entire surface of this side of the tooth. After cutting several teeth on one side it is desirable to cut the opposite sides of these same teeth for trial. To do this, adjust the cross slide to bring the blank central with the cutter and then continue to adjust it the same amount as before, but in the opposite direction, and rotate the blank the same amount but in the opposite direction. After having milled a tooth with this new setting, measure both the large and the small ends at their pitch line. If it is found that the large end of the tooth is too thick and the small end is correct, the blank was not off-

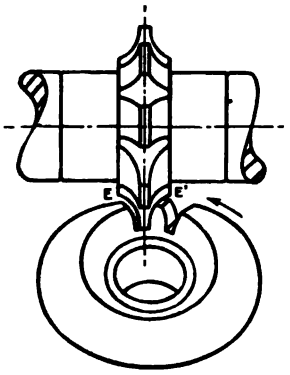

Fig. 242

set enough; on the other hand, if the small end is too thick and the large end is correct, it was offset too much. Generally speaking, if the small end is too thin, it indicates that the offset was not enough, and if the small end is too thick, the offset has been too much. If the tooth as measured is not correct, then we must correct the settings in accordance with the above, using slightly more or slightly less offset, as the case may be, and revolve the blank correspondingly.

Fig. 243

It must be borne in mind, however, that exactly the same setting must be made, but in the opposite direction for both sides of the teeth. When the final setting has been determined it is well to make a permanent record of it for future use.

When rotating the blank in accordance with the above, it will sometimes happen that when the tooth face is in the correct relation to the cutter the index pin will not enter the nearest hole in the index plate. We must then loosen the index plate lock and revolve the plate, being careful not to disturb the position of the index pin handle until the pin drops into one of the holes, then lock the plate in position again.

After the gear has been cut it will be found that the teeth at the small end have their sides too straight; that is, they are too thick at the top, and this must finally be corrected by filing a triangular area from the point of the tooth at the small end down to its pitch line and back towards the point of the tooth at the large end, Fig. 243.

Formulas for Bevel Gear Calculations

From the foregoing the following rules and formulas have been deduced. These, like the preceding discussion apply to BEVEL GEARS WITH SHAFTS AT RIGHT ANGLES, which of course, include mitre gears. The notation used in the formulas, which is easily understood by comparing the formula with the corresponding rule, is as follows:

N = number of teeth.
P = diametral pitch.
P' = circular pitch.
π = 3.1416.
α = pitch cone angle and edge angle.
γ = center angle.
D = pitch diameter.
S = addendum.
$S + A$ = dedendum + clearance.
W = whole depth of tooth space.
T = thickness of tooth at pitch line.
C = pitch cone radius.
F = width of face.
s = addendum at small end of tooth.
t = thickness of tooth at pitch line at small end.
θ = addendum angle.
ψ = (dedendum + clearance) angle.
δ = face angle.
ζ = cutting angle.
K = angular addendum.
O = outside diameter.
J = vertex distance.
j = vertex distance at small end.
N' = number of teeth for which to select cutter, also called "number of teeth in equivalent spur gear."

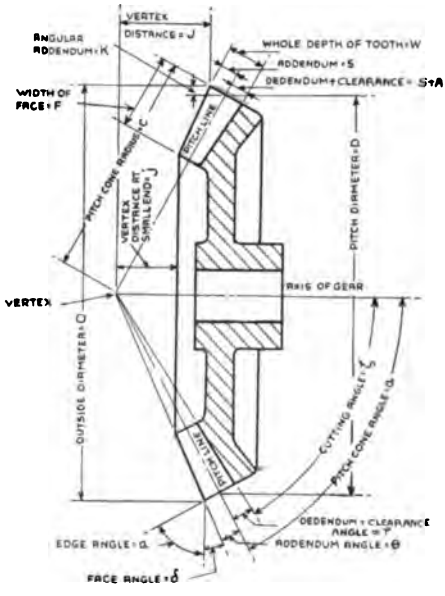

Fig. 244

Rules and Formulas for Calculating Bevel Gears with Shafts at Right Angles

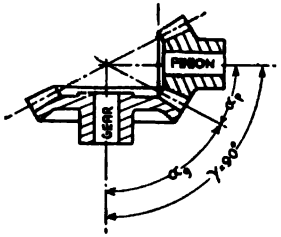

Fig. 245

$\propto p$ = Pitch cone angle of pinion;
$\propto g$ = Pitch cone angle of gear;
Np = Number of teeth in pinion, etc.

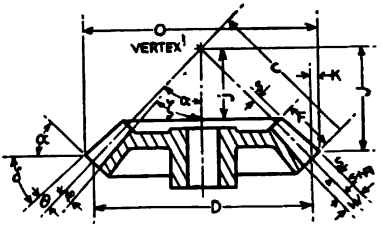

Fig. 246

Use Rules and Formulas Nos. 1 to 21 in the order given

No.	To Find		Rule	Formula
1	Pitch Cone Angle (or Edge Angle) of Pinion		Divide the number of teeth in the pinion by the number of teeth in the gear to get the tangent.....	$\tan \propto p = \frac{Np}{Ng}$
2	Pitch Cone Angle (or Edge Angle) of Gear		Divide the number of teeth in the gear by the number of teeth in the pinion to get the tangent.....	$\tan \propto g = \frac{Ng}{Np}$
3	Proof of Calculations for Pitch Cone Angles		The sum of the pitch cone angles of the pinion and gear equals 90°....	$\propto p + \propto g = 90°$
4	Pitch Diameter		Divide the number of teeth by the diametral pitch; or multiply the number of teeth by the circular pitch and divide by 3.1416.....	$D = \frac{N}{P} = \frac{NP'}{\pi}$
5	These dimensions are the same for both gear and pinion.	Addendum	Divide 1 by the diametral pitch; or multiply the circular pitch by 0.318.	$S = \frac{1}{P} = 0.318\ P'$
6		Dedendum + clearance S+A	Divide 1.157 by the diametral pitch; or multiply the circular pitch by 0.368.....	$S + A = \frac{1.157}{P} = 0.368\ P'$
7		Whole Depth of Tooth Space	Divide 2.157 by the diametral pitch; or multiply the circular pitch by 0.687.....	$W = \frac{2.157}{P} = 0.687\ P'$
8		Thickness of Tooth at Pitch Line	Divide 1.571 by the diametral pitch; or divide the circular pitch by 2....	$T = \frac{1.571}{P} = \frac{P'}{2}$
9		Pitch Cone Radius	Multiply the radius $\frac{D}{2}$ by the cosecant of the pitch cone angle.....	$C = Cosec\ D \times \frac{D}{2}$

Rules and Formulas for Calculating Bevel Gears with Shafts at Right Angles—Continued

No.	To Find	Rule	Formula
10	Addendum of Small End of Tooth (These dimensions are the same for both gear and pinion.)	Subtract the width of face from the pitch cone radius, divide the remainder by the pitch cone radius and multiply by the addendum	$s = S \times \frac{C-F}{C}$
11	Thickness of Tooth at Pitch Line at Small End (These dimensions are the same for both gear and pinion.)	Subtract the width of face from the pitch cone radius, divide the remainder by the pitch cone radius and multiply by the thickness of the tooth at the pitch line	$t = T \times \frac{C-F}{C}$
12	Addendum Angle (These dimensions are the same for both gear and pinion.)	Divide the pitch cone radius by the addendum to get the cotangent	$\text{Cotan} = \frac{C}{S}$
13	Dedendum + Clearance Angle (These dimensions are the same for both gear and pinion.)	Divide the pitch cone radius by the dedendum+clearance $(S + A)$ to get the cotangent	$\text{Cotan} = \frac{C}{S+A}$
14	Face Angle	Subtract the sum of the pitch cone and addendum angles from 90°	$\delta = 90° - (\alpha + \theta)$
15	Cutting Angle	Subtract the dedendum angle from the pitch cone angle	$\zeta = \alpha - \psi$
16	Angular Addendum	Multiply the addendum by the cosine of the pitch cone angle	$K = S \times \cos \alpha$
17	Outside Diameter	Add twice the angular addendum to the pitch diameter	$O = D + 2K$
18	Apex Distance	Multiply one-half the outside diameter by the tangent of the face angle.	$J = \frac{O}{2} \times \tan \delta$
19	Apex Distance at Small End of Tooth	Subtract the width of face from the pitch cone radius; divide the remainder by the pitch cone radius and multiply by the apex distance	$j = J \times \frac{C-F}{C}$
20	Number of Teeth for which to Select Cutter	Divide the number of teeth by the cosine of the pitch cone angle	$N' = \frac{N}{\cos}$
21	Proof of Calculations by Rules Nos. 9, 12, 14, 16 and 17	The outside diameter equals twice the pitch cone radius multiplied by the cosine of the face angle and divided by the cosine of the addendum angle	$O = \frac{2C \times \cos \delta}{\cos \theta}$

Rules and Formulas for Calculating Miter Bevel Gearing

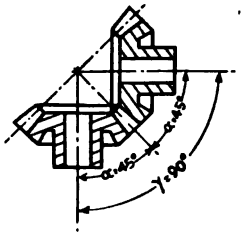

Fig. 247

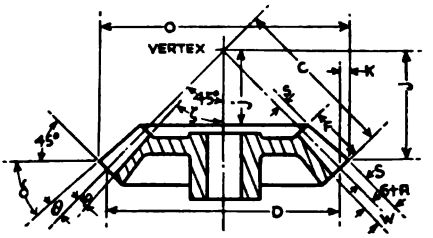

Fig. 248

Use Rules and Formulas Nos. 22, 4-8, 23, 10-13, 24-26, 17-19, 27 and 21 in the order given. All dimensions thus obtained are the same for both gears of a pair.

No.	To Find	Rule	Formula
22	Pitch Cone Angle	Pitch cone angle equals 45°.....	$\alpha = 45°$
23	Pitch Cone Radius	Multiply the pitch diameter by 0.707.	$C = 0.707\ D$
24	Face Angle	Subtract the addendum angle from 45°.....	$\delta = 45° - \theta$
25	Cutting Angle	Subtract the (dedendum + clearance) angle from 45°.....	$\zeta = 45° - \psi$
26	Angular Addendum	Multiply the addendum by 0.707 ...	$K = 0.707\ S$
27	Number of Teeth for which to Select Cutter	Multiply the number of teeth by 1.41.	$N' = 1.41\ N$

CHAPTER XVI

SPIRAL GEAR CUTTING

Spiral gears may have their axes parallel, the same as spur gears, or the axes may be at an angle with each other. A spiral gear differs from a spur gear in that the teeth are not placed parallel with the axis, but are wound spirally around the pitch circle. The name "spiral gears" is really wrong. The teeth are not wound in a SPIRAL, but in a HELIX around the pitch circle. The distinction between a spiral and a helix will be clear when we remember that the main spring of a watch is a good example of a spiral, while the threads on a lead screw form a helix. However, in our discussion, we will use the name "spiral gears," as this is the name by which the average mechanic knows them. This chapter will not treat of all the properties of spiral gears, but only of such as need be known in order to design or make them.

If we have two shafts with a center distance of $7\frac{1}{4}''$, and we must drive one shaft from the other with a given speed ratio, we will find considerable trouble if we try to use spur gears. If, for instance, the speed ratio is 4 to 5, we will not be able to use spur gears except by making them 18 pitch. The sum of the diameters is $14\frac{1}{2}''$, being twice the center distance, and we must select the pitch so that the sum of the numbers of teeth of the two gears can be split up into two numbers which have a ratio of 4 and 5. If we should select 4 pitch for the gears, we would find that the sum of the numbers of teeth of these two gears is 4 times the sum of their diameters, or 4 times $14\frac{1}{2}$ equals 58. However, 58 can not be split up into two numbers which have a ratio of 4 and 5. In order to do so, 58 should be divisible by 4 plus 5 which equals 9. If we should select 5-pitch gears, then the sum of the numbers of teeth of the two gears would be $5 \times 14\frac{1}{2} = 72\frac{1}{2}$, and this, of course, is impossible, as the sum of the number of teeth of two gears must be an integral number. If we make the pitch 18, then the sum of the numbers of teeth of the two gears would be $18 \times 14\frac{1}{2} = 261$, and

one gear would have $\frac{4}{9}$ of 261 teeth, and the other gear $\frac{5}{9}$ of this number. However, 18 pitch is probably entirely too fine for the work we have to do, so that we must choose one of two things. We must either make special cutters with an odd pitch, or we must be satisfied with a compromise as to the gear ratio. The first of these two things is costly and consumes a great deal of time and the other may be absolutely prohibitive if an exact gear ratio is required.

Substituting spiral gears for spur gears would solve the question at once.

Definitions—Pitch, Lead, Normal Pitch, etc. A tooth of a spiral gear is much like the thread of a screw. It does not have the same cross section, nor is it meant to do the same kind of work, but in many respects the two are very similar. The distance from a point on a screw thread to the corresponding point on the next thread is called the PITCH. The distance the screw travels in an axial direction, if we give it one complete turn, is called the LEAD. These same terms apply in the same way to a spiral gear. There is, however, this distinction: We measure the pitch of a screw along the axis of the screw, whereas, we measure the pitch of a spiral gear around the circumference, that is, at right angles to the axis. However, there are two things which are called pitch in the spiral gear. The pitch, as we described it, that is, the distance between two corresponding points of two adjoining teeth measured at right angles to the axis, is called the REAL pitch, whereas the distance between two corresponding points of two adjoining teeth, measured in a direction AT RIGHT ANGLES TO THE DIRECTION OF THE TEETH, is called the NORMAL pitch. The normal section, which would give us the normal pitch, would show us the true section of the teeth. A section, taken at right angles to the axis, would give us the distorted view of the shape of the teeth as seen when looking at the end of a spiral gear. A section through the axis would also give a distorted view. If the spiral angle is 45°, then the distorted views of the teeth would be the same whether we take the sections through the axis, or at right angles with the axis. If the angle of the spiral with the axis is less than 45°, that is, if the spiral gear approaches more nearly a spur gear, then the right angle section would give a less and the axial section a more distorted view. This is reversed if the angle of the spiral with the axis is more than 45°, that is, if the spiral gear approaches more nearly the shape of a worm.

Cutting Spiral Gears. Spiral gears are ordinarily cut with common spur gear cutters. The normal pitch is, therefore, given in the same way as the pitch of spur gears, that is, we talk of a 5, a 7, or a 10-pitch gear. The real pitch is measured along the circular section of the gear, and if this pitch is P and the number of teeth of the gear is n, then the length of the circumference of the normal section is nP.

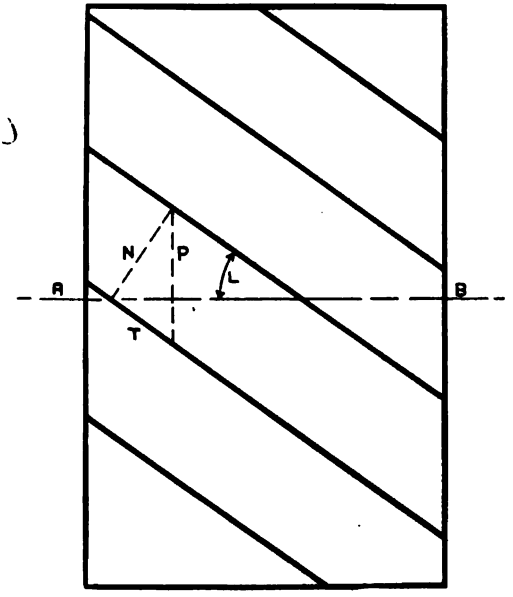

AB = AXIS
T = TOOTH LINE
N = NORMAL PITCH
P = REAL PITCH
L = SPIRAL ANGLE

Fig. 249

Fig. 249 shows that the normal pitch and real pitch bear such a relation to each other that the normal pitch is a right angle side of a right angle triangle, of which the real pitch is the hypotenuse and the tooth line is the base. If the angle between the tooth line and the axis is called L, and if the normal pitch is P, then the real pitch is P-secant-L. If we know the pitch of the cutter, the number of teeth and the spiral angle, we can easily figure the pitch diameter of the spiral gear. We figure as if it were a spur gear and then multiply the diameter by the secant of the spiral angle. For instance, a

spiral gear with 16 teeth, 5 pitch, and a spiral angle of 37 degrees, will have a diameter of 16 divided by 5 and multiplied by the secant of 37 degrees. If we were dealing with a spur gear the pitch diameter would be $\frac{16}{5} = 3.2''$.

From a table of secants we find sec 37° = 1.2521. Then we have $3.2 \times 1.2521 = 4.0064''$, the pitch diameter of the spiral gear.

The pitch circumference is $4.0067 \times \pi = 4.0067 \times 3.14159 = 12.587''$.

If we should make a wooden cylinder with a diameter equal to the pitch diameter of our spiral gear, and then cut out a paper right angle triangle, Fig. 250, of which one right angle side is equal to the circumference of the pitch circle, and the opposing angle equal

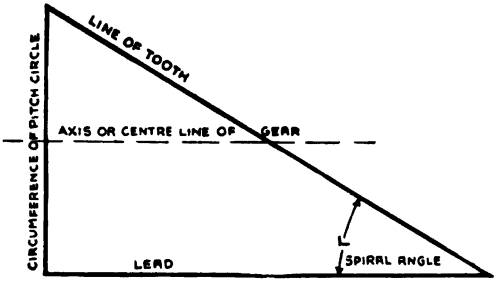

Fig. 250

to the spiral angle, and wrap this triangle around the cylinder, we will find that the hypotenuse describes a spiral line around the cylinder, and that the end of the hypotenuse will come in line with the beginning. In other words, the two ends of the hypotenuse will be a distance apart on the cylinder equal to the lead of the spiral. If now we unwrap the paper triangle we have in this triangle all the important elements of a tooth of the spiral gear. One right angle side is the circumference of the pitch circle, the second right angle side is the lead, the hypotenuse is the length of a tooth wrapped once around the pitch cylinder, the angle opposite the circumference is the angle of the spiral with the axis of the gear. This is commonly called the spiral angle or helix angle. It is the angle to which the milling machine table must be set. The angle opposite the lead is the angle which the tooth makes with the body of the gear.

Addendum, dedendum and clearance are the same as in a spur gear of the same pitch as the normal pitch of the spiral gear.

Selecting the Cutter. It is now possible to figure all the dimensions of the spiral gear and turn up the blank in the lathe. However, when it comes to cutting the teeth, a new element comes in. Although the gear may have 16 teeth, 5 pitch, this does not mean that we can use a 16-tooth, 5-pitch gear cutter for this spiral gear. It is true, we will have to use a 5-pitch cutter, but not for 16 teeth. We must select a spur gear cutter for a different number of teeth. The rule usually given is to divide the number of teeth of the spiral gear by the cube of the cosine of the spiral angle.

This gives good results for gears having a spiral angle in the neighborhood of 45°, but anyone who has followed this rule for gears with a spiral angle differing greatly from 45° will have found that such gears do not run properly and the running of the gears becomes worse as the spiral differs more from 45°. For such gears we recommend the following rule:

Divide the number of teeth of the spiral gear by the product of the square of the cosine multiplied by the sine of the spiral angle.

$N = \frac{n}{\text{Cos } L^2 \times \sin L}$ in which N is the number of teeth of the selected gear cutter, and n is the number of teeth of the spiral gear.

Taking the above case

$$N = \frac{n}{\text{Cos } 37^2 \times \sin 37} = \frac{16}{.79864^2 \times .60182} = \frac{16}{.6378 \times .60182} = 41.$$

We should select a cutter suitable for cutting a gear with 41 teeth.

The speed ratio of two spiral gears is, as with spur gears, the ratio of their numbers of teeth. For instance, a 16-tooth gear driving a 32-tooth gear will cause this latter gear to run half as many revolutions per minute as the former. The center distance between two spiral gears, as with spur gears, is equal to half the sum of their pitch diameters.

Shafts Parallel. Computation of a pair of spiral gears which are to be used in place of spur gears.

If we have two shafts, say 8″ apart, and wish to drive one from the other by means of spiral gears with a given gear ratio, and, if we desire to use standard gear cutters we should proceed as is shown in the following example:

The two gears shown in Fig. 251 must have a ratio of 2 to 1; a center distance of 8", and in order to make them of the proper strength the teeth must have about 5 pitch. As we want to use standard gear cutters, we will make the pitch exactly 5.

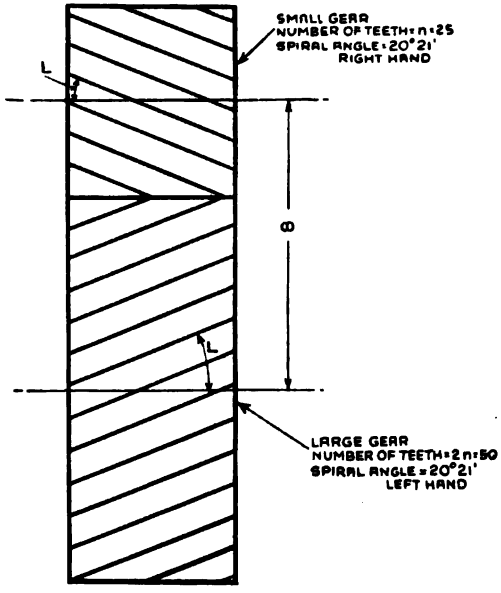

Fig. 251

A pair of spiral gears on parallel shafts to give a speed ratio of 2 to 1.

Number of Teeth and Spiral Angle. Taking the number of teeth in the small gear = n, and the number in the large gear = 2n, and the spiral angle of the teeth in the small gear L, we have:

Pitch diameter small gear = $\frac{n \sec L}{5}$, and

Pitch diameter large gear = $\frac{2n \sec L}{5}$, because, in a pair of spiral gears with shafts parallel, the spiral angle is the same in both.

The sum of the pitch diameters of the gears is, therefore,

$$\frac{n \sec L}{5} + \frac{2n \sec L}{5}$$

and this sum equals double the center distance.

Therefore,

$$\frac{n}{5} \sec L + \frac{2n}{5} \sec L = 16.$$

Multiplying both sides of this equation by 5, in order to simplify it, we get

$$n \sec L + 2n \sec L = 80.$$

This is a very simple equation, but unfortunately there are two unknown quantities: The number of teeth n, and the spiral angle L. However, there is one thing we know about n; it must be an INTEGRAL number. There is still another thing we know, and that is that we would like the angle to be about 20 degrees, for this gives the maximum efficiency of the gear system. We will, therefore, try the equation by giving L the value of 20°: sec 20 = 1.0642, and therefore the equation

$$n \sec L + 2n \sec L = 80$$

becomes $(n \times 1.0642) + (2n \times 1.0642) = 80.$

$$3n \times 1.0642 = 80.$$
$$n \times 3.1926 = 80.$$
$$n = 25.058.$$
$$2n = 50.116.$$

As n must be an integral number, we will assume a value of n = 25, and therefore 2n = 50.

Substituting in the above equation, we get

$$25 \times 1.0642 + 50 \times 1.0642 = 79.815.$$

Since the second member of the equation should be 80 and not 79.815, it is evident that the assumed value of 20° for L, the spiral angle will not do, if we decide to use 25 and 50 teeth. In proceeding to find the correct angle, we will first determine whether the angle should be more or less than 20°. For trial, we will select 19° and 21°. With 20° the value of the second member was too small. Therefore, it must be increased. Since our value is too small we will try a larger angle, 21°:

sec 21 = 1.0711. Substituting this in our equation, we get
$25 \times 1.0711 + 50 \times 1.0711 = 80.3325.$

The value, using 20°, was .185 too small. Our new value is .3325 too large. The correct angle is, therefore, between 20° and 21°. By trial, we find that 20°22′ (sec 20°22′ = 1.0667) gives us

$25 \times 1.0667 + 50 \times 1.0667 = 80.0025$, or .0025 too large, and 20°21′ (sec 20°21′ = 1.066) gives us

$25 \times 1.0666 + 50 \times 1.0666 = 79.9950$, or .005 too small.

We will, therefore, choose as our value of L, 20°21′. Let us try this out and find what the new center distance between the gears will be.

Since the gears are 5 pitch and we have taken 2 × center distance for our second member of the equation, then the center distance is

$$\frac{79.9950}{2 \times 5} = 7.99950$$

which is .0005″ short, which is close enough for all practical purposes.* Our gears, therefore, will have a spiral angle of 20°21′, the small one with 25 teeth and the large one with 50 teeth.

Selecting the Cutter. Referring back to the rule given on page 295, we have for the small gear

$$N = \frac{n}{\cos^2 20°21' \times \sin 20°21'} = \frac{25}{.93759^2 \times .34775} =$$

$$\frac{25}{.8780 \times .34775} = 81,$$

and for the large gear

$$\frac{50}{.93759^2 \times .34775} = \frac{50}{.8780 \times .34775} = 163.$$

Therefore, the cutters should be selected for 81 and 163 teeth respectively.

* We have already decided that the center distance between the shafts on which these gears will work in our machine is 8″. Were we to use an angle of 20° 22′, our gears would have a center distance .00025″ too large, and they would not go into place, or at least they would work too tight if all other dimensions were correct. We therefore choose 20° 21′ which makes gears that are .0005″ small and will have just this much working clearance. This is satisfactory for ordinary work. If closer accuracy is required we must either change our center distance in the machine or continue trying by selecting angles reading in seconds until a satisfactory one is found.

Computing the Lead. Referring to Fig. 250: We know angle L = 20°21′. However, we do not know the pitch circumference. We must therefore first find the

PITCH DIAMETERS

$$\text{Pitch diameter} = \frac{n}{P} \times \sec L.$$

Then for the small gear we have

$$\frac{25}{5} \times \sec 20°21' = \frac{25}{5} \times 1.0666 = 5.3330,$$

and for the large gear

$$\frac{50}{5} \times \sec 20°21' = \frac{50}{5} \times 1.0666 = 10.666$$

Since the outside diameter equals the pitch diameter plus twice the addendum, $OD = PD + \frac{2}{P}$ therefore,

outside diameter of small gear $= 5.3330 + \frac{2}{5} = 5.7330''$;

outside diameter of large gear $= 10.6660 + \frac{2}{5} = 11.0660''$.

The PITCH CIRCUMFERENCES are:

small gear $5.333 \times 3.1416 = 16.754$
large gear $10.666 \times 3.1416 = 33.508$.

$$\text{Lead} = \frac{\text{pitch circumference}}{\text{Tangent L}} = \frac{16.754}{\text{Tangent } 20°21'} = \frac{16.754}{.37090} = 45.17''$$

for the small gear, and $2 \times 45.17'' = 90.34''$ for the large gear.

We now proceed to select the change gears by following the instructions given in the chapter on Change Gears for Cutting Spirals.

Our gears are as follows, shafts parallel:

Pitch..... = 5.
Number of teeth in small gear..... = 25.
Number of teeth in large gear..... = 50.

Spiral angle small gear ..... = 20°21′ right hand.
Spiral angle large gear ..... = 20°21′ left hand.
Pitch diameter small gear ..... = 5.3330″.
Pitch diameter large gear ..... = 10.6660″.
Outside diameter small gear ..... = 5.7330″.
Outside diameter large gear ..... = 11.0660″.
Lead small gear ..... = 45.17″.
Lead large gear ..... = 90.34″.
Cutter for small gear ..... = for 81 teeth.
Cutter for large gear ..... = for 163 teeth.
Center distance (exact) ..... = 7.99950″.
Center distance (actual used) ..... = 8.00″.

The above example is not at all unusual, since spiral gears are coming more into general use for transmission members on parallel shafts in place of spur gears.

Shafts at Right Angles. We will now consider the case of a pair of spiral gears on shafts that are at right angles with each other, Fig. 252, using the same general data as above.

Speed ratio ..... = 2 to 1.
Pitch ..... = 5.
Center distance ..... = 8.
Spiral angle of small gear ..... = L.
Spiral angle of large gear ..... = 90° − L.
or = complement of L.
Number of teeth in small gear ..... = n.
Number of teeth in large gear ..... = 2n.

There is an important point of difference between this and the previous case.

With shafts parallel, we prefer a spiral angle of about 20° to reduce the end pressure on the shafts. With shafts at right angles, we prefer a spiral angle of as near 45° as we can make it, for this gives the maximum efficiency of such a gear system.

Number of Teeth and Spiral Angle. Since the spiral angle of the large gear is the complement of L, we must use the COSECANT in finding its number of teeth. Our equation then is

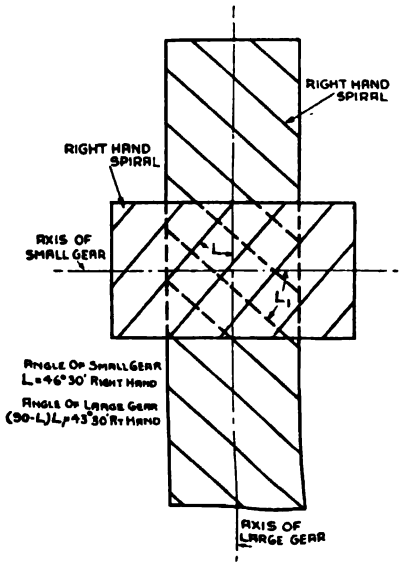

Fig. 252

Spiral gears with shafts at right angles

$$\frac{n \sec L}{5} + \frac{2n \operatorname{cosec} L}{5} = 16, \text{ or}$$

$$n \sec L + 2n \operatorname{cosec} L = 80.$$

$$\sec 45° = 1.4142$$

$$\operatorname{cosec} 45° = 1.4142$$

and therefore, the equation

$$n \sec L + 2n \operatorname{cosec} L = 80$$

becomes

$$n \times 1.4142 + 2n \times 1.4142 = 80.$$

$$3n \times 1.4142 = 80.$$

$$n \times 4.2426 = 80.$$

$$n = 18.85.$$

Since n must be an integral number, we will assume n to have a value of 19, and therefore 2n equals 38. Substituting these values in our equation, we get

$$19 \times 1.4142 + 38 \times 1.4142 = 80.6094.$$

Since the second member of the equation should be 80, it is evident that our assumed value of 45° for L, the spiral angle, is incorrect for 19 and 38 teeth. In proceeding to find the correct angle, we will first determine whether the angle should be more or less than 45°. For trial, we select 44° and 46°. With 45°, the value of the second member was too large. Therefore, it must be reduced. If we find that 44° gives a smaller value than 45°, then we know that the angle should be LESS than 45°, but if the value is greater, then we know that the angle must be MORE than 45°. Of course, we don't expect that either 44° or 46° will be the correct value of the angle, but making a trial with both will show us in the first place, in which direction we must go, and in the second place, how much a change of one degree affects the result.

Assuming an angle of 44°:

$$\text{sec } 44 = 1.3902$$
$$\text{cosec } 44 = 1.4395$$

we then have

$$19 \times 1.3902 + 38 \times 1.4395 = 81.1148.$$

This is more than the value resulting from 45°. Therefore, we must select an angle greater than 45°. Assuming an angle of 46°:

$$\text{sec } 46 = 1.4395$$
$$\text{cosec } 46 = 1.3902$$

we then have

$$19 \times 1.4395 + 38 \times 1.3902 = 80.1781.$$

This is closer to 80 than we found when L was assumed at 45°, but it is still too large. We will, therefore, try an angle of 47°.

$$\text{sec } 47 = 1.4663$$
$$\text{cosec } 47 = 1.3673$$

we then have

$$19 \times 1.4663 + 38 \times 1.3673 = 79.8171.$$

This is too small, whereas the value L = 46 was too large, therefore, the true value of L must be somewhere between 46° and 47°.

We note further that the value for L = 46 is .1781 too large and for L = 47 is .1829 too small, so that we may expect the true value of L to be very close to 46°30′. We will try this, assuming L = 46°30′.

$$\sec 46°30' = 1.4527$$
$$\operatorname{cosec} 46°30' = 1.3786$$

then

$$19 \times 1.4527 + 38 \times 1.3786 = 79.9881.$$

This value is so close to 80, that it is worth while to try it out and see what the center distance of these gears will be.

In our first equation we made the second member

$2 \times$ center distance $\times$ the pitch $= 2 \times$ center distance $\times 5 = 80$.

Therefore, the center distance of our new gear will be,

$$\text{center distance} = \frac{79.9881}{2 \times 5} = 7.99881.$$

This differs from 8″ only a little more than .001″, which is close enough for all ordinary requirements. However, we do not need to stop here if extraordinary accuracy is required. In that case we would note that the value of the second member is too SMALL and that, therefore, the angle is too large. We would, therefore, try 46° 20′ or 46°25′ and gradually narrow down until the error is inside of the permissible limits.

By following the same methods as in the previous example, we find other needed data as follows:

Selecting the cutter for the small gear we have

$$N = \frac{n}{\cos^2 46°30' \times \sin 46°30'} = \frac{19}{.3437} = 55,$$

and for the large gear

$$N = \frac{n}{\cos^2 43°30' \times \sin 43°30'} = \frac{38}{.3622} = 105,$$

therefore the cutters should be selected for 55 and 105 teeth respectively.

Computing the Lead. Pitch diameter $= \frac{n}{P} \times \sec L$. There-

fore, we have for the small gear

$$\frac{19}{5} \times \sec 46°30' = \frac{19}{5} \times 1.4527 = 5.52026,$$

and for the large gear

$$\frac{38}{5} \times \sec 43°30' = \frac{38}{5} \times 1.3786 = 10.47736.$$

$$\text{Outside diameter small gear} = 5.520 + \frac{2}{5} = 5.920''.$$

$$\text{Outside diameter large gear} = 10.477 + \frac{2}{5} = 10.877''.$$

The pitch circumferences therefore, are

small gear $5.520 \times 3.1416 = 17.341$
large gear $10.477 \times 3.1416 = 32.914$

$$\text{Lead} = \frac{\text{Pitch circumference}}{\text{Tangent L}}$$

We have for the small gear

$$\text{Lead} = \frac{17.341}{\text{Tan } 46°30'} = \frac{17.341}{1.05378} = 16.465''$$

and for the large gear

$$\text{Lead} = \frac{32.914}{\text{Tan } 43°30'} = \frac{32.914}{.94896} = 34.684''.$$

We can now proceed to select the change gears as described in the chapter on Change Gears for Cutting Spirals.

Our gears are as follows—shafts at right angles:

Pitch..... = 5.
Number of teeth in small gear..... = 19.
Number of teeth in large gear..... = 38.
Spiral angle of small gear..... = 46°30′ right hand.
Spiral angle of large gear..... = 43°30′ right hand.
Pitch diameter of small gear..... = 5.520″.

Pitch diameter of large gear..... = 10.477″.
Outside diameter of small gear..... = 5.920″.
Outside diameter of large gear..... = 10.877″.
Lead of small gear..... = 16.465″.
Lead of large gear..... = 34.684″.
Cutter for small gear..... = for 55 teeth.
Cutter for large gear..... = for 105 teeth.
Center distance (exact)..... = 7.99881″.
Center distance (actual used)..... = 8.00″.

Shafts at an Angle of Less than Ninety Degrees. We will now consider the case of a pair of spiral gears on shafts at an angle of 60° with each other, Fig. 253, using again the same general data as in the two previous cases.

Speed ratio..... = 2 to 1.
Pitch of cutter..... = 5.
Center distance..... = 8.
Spiral angle of small gear..... = L.
Spiral angle of large gear..... = 60° − L.
Number of teeth in small gear..... = n.
Number of teeth in large gear..... = 2 × n.

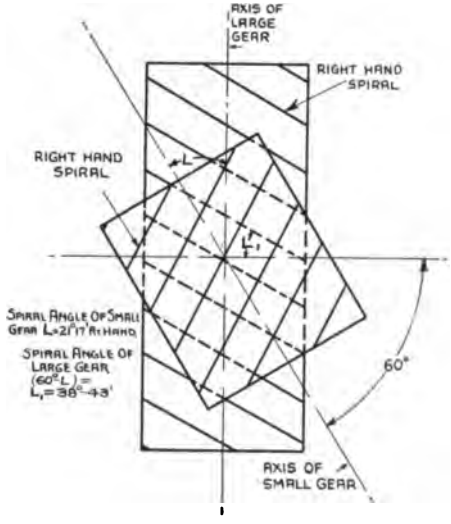

Fig. 253

Spiral gears with shafts at an angle of less than 90 d gree

(a) If the spiral angle of each gear is LESS than the angle between the shafts, then the sum of the spiral angles of the gears will equal the shaft angle and the gears will be of THE SAME HAND SPIRAL.

(b) If the spiral angle of one of the gears is GREATER than the shaft angle, then the DIFFERENCE between the spiral angles equals the shaft angle and the gears will be of OPPOSITE HAND SPIRALS.

Number of Teeth and Spiral Angle. Our equation is again

$$\frac{n \times \text{Sec } L}{5} + \frac{2n \times \text{Sec } (60° - L)}{5} = 16, \text{ or}$$

$$n \times \text{Sec } L + 2n \times \text{Sec } (60° - L) = 80.$$

We now have to find the angle L by trial. Let us assume $L = 20°$, then

$$n \times 1.0642 + 2n \times 1.3054 = 80, \text{ or}$$
$$1.0642n + 2.6108n = 80$$
$$3.675n = 80$$

$$n = \frac{80}{3.675} = 21.8 \text{ teeth.}$$

Suppose we select $n = 22$ and find the spiral angle L by assuming $L = 20°$, then

$$22 \times \text{Sec } 20° + 2 \times 22 \times \text{Sec } (60° - 20°) = 80, \text{ or}$$
$$22 \times 1.0642 + 44 \times 1.3054 = 80$$
$$23.414 + 57.437 = 80.850, \text{ which is too large.}$$

Suppose $L = 21°$, then

$$22 \times \text{Sec } 21° + 44 \times \text{Sec } 39° = 80$$
$$23.5022 + 56.6148 = 80.117,$$

which is still a trifle too large. After trying a few more examples, with angles ranging from 21° to 22°, we find $L = 21°17'$, which gives

$$22 \times \text{Sec } 21°17' + 44 \text{ Sec } 38°43' = 80$$
$$23.6104 + 56.3904 = 80.0008,$$

which is close enough for all practical purposes.

Diameters, Circumferences, etc. Then,

$$\text{Pitch dia. of small gear} = \frac{22 \times \text{Sec } 21°17'}{5} = 4.722''.$$

$$\text{Pitch dia. of large gear} = \frac{44 \times \text{Sec } 38°43'}{5} = 11.278''.$$

$$\text{Center distance} = \tfrac{1}{2}\,(4.722 + 11.278) = 8.000.''$$

$$\text{Outside dia. of small gear} = 4.722 + \frac{2}{5} = 5.122''.$$

$$\text{Outside dia. of large gear} = 11.278 + \frac{2}{5} = 11.678''.$$

The pitch circumferences are:

Small gear = $4.722 \times 3.1416 = 14.834''$
Large gear = $11.278 \times 3.1416 = 35.430''$

and the exact leads are for the

$$\text{Small gear } \frac{14.834}{\text{Tan } 21°17'} = 38.081''$$

$$\text{Large gear } \frac{35.430}{\text{Tan } 38°43'} = 44.198''$$

Selecting the size of cutter, we have for

$$\text{Small gear, N} = \frac{22}{\text{Cos}^2\, 21°17' \times \text{Sine } 21°17'} = 27.2 \text{ teeth}$$

$$\text{Large gear, N} = \frac{44}{\text{Cos}^2\, 38°43' \times \text{Sine } 38°43'} = 115.6 \text{ teeth.}$$

From the table of leads (page 344) we find the closest lead for the small gear is 38.182 and the large gear 43.977, and the corresponding change gears, 72, 24, 56, 44 and 86, 44, 72, 32.

This example indicates the procedure for computing a pair of spiral gears with shafts at any other angle.

It is important that drawings should be complete with all data needed by the shop before they leave the Engineering Department. For example: The data that the drawing for the above spiral gears should contain are as follows:

	Small Gear	Large Gear
Pitch of cutter	5	5
Number of teeth	22	44
Pitch diameter	4.722″	11.278″
Outside diameter	5.122″	11.678″
Center distance	8.000″	8.000″
Addendum	.200″	.200″
Whole depth	.4314″	.4314″
Spiral angle	21° 17′	38° 43′
Lead exact	38.081″	44.198″
Lead approximate	38.182″	43.977″
Number of teeth for which to select cutter	27 (No. 4 Cutter)	115 (No. 2 Cutter)
The change gears for cutting this spiral are:		
Gear on worm	72	86
First intermediate	24	44
Second intermediate	56	72
Gear on screw	44	32

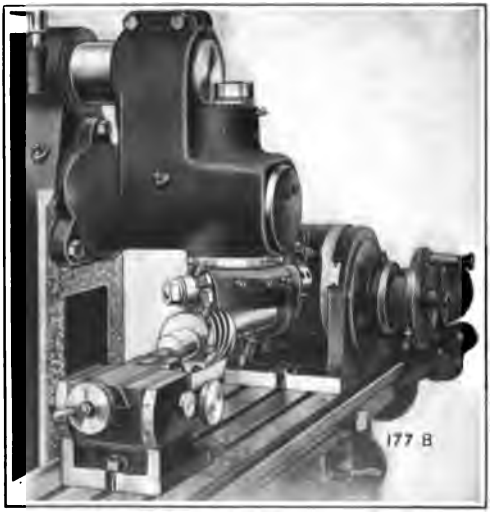

Fig. 254
Cutting a short lead spiral gear on a Plain Miller

The equipment shown in Fig. 254 is a No. 3 Cincinnati Miller with Dividing Head and Spiral Milling Attachment. The blank is steel, 3″ diameter, 3 pitch, 60° spiral, and is fed past the cutter 1″ per minute. This equipment will mill spirals of any angle up to about 70°. It will also cut racks.

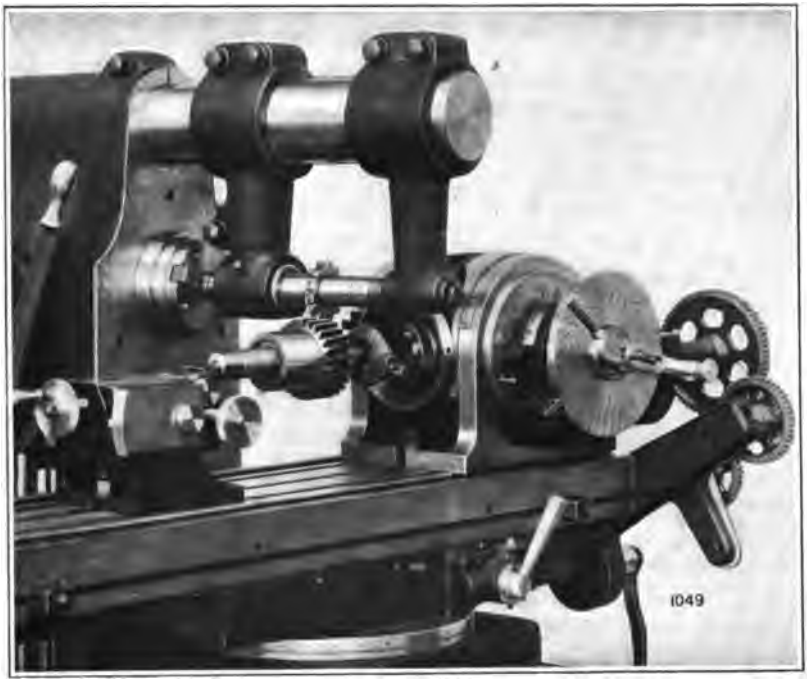

Fig. 255
Cutting a long lead spiral gear.

Fig. 255 shows a Cincinnati High-Power Universal Miller with its regular equipment of Dividing Head, etc. The table may be swiveled 52° for either right or left hand spirals. For spirals having a larger angle the Spiral Milling Attachment must be used.

CHAPTER XVII

WORM GEARING

If, in a pair of spiral gears, the driver has a very small number of teeth, as for instance, one, two, three or four, and the driven gear a proportionately large number; in other words, if the velocity ratio is very great then we get a gearing arrangement which is commonly called endless screw or worm gearing. The driver, which is called a worm, is a screw with single or multiple threads of such a form that its cross section is the same as that of a rack and its teeth must mesh with a special form of spur gear called a wormwheel.

In a worm and wormwheel with shafts at right angles, the teeth of the wormwheel form an angle with the shaft which is the same as the complement of the spiral angle of the worm; that is, 90° minus the spiral angle of the worm. A wormwheel may therefore be a plain spur gear with its teeth at an angle with its axis. Such wormwheels are in common use. But the more efficient form of wormwheel used in machinery of the better class has its teeth made to fit the worm thread accurately. This is the form of wormwheel that should preferably be used wherever efficiency and durability are essential.

The velocity ratio of a worm and wormwheel is independent of their relative pitch diameters; if the worm has a single thread the velocity ratio is equal to the number of teeth of the wormwheel; with a double-threaded worm it is one-half; with a quadruple-threaded worm one-fourth of the number of teeth of the wormwheel, and so on.

Careful distinction should be made between the terms "pitch" and "lead." The distance between the center of two adjacent threads is termed the "pitch" or more correctly, the "linear pitch," while the "lead" is the DISTANCE WHICH ANY ONE THREAD ADVANCES IN ONE REVOLUTION of the worm. Therefore, the lead and pitch of any single-threaded worm will be equal, while for a double-threaded worm the lead is twice, and for a quadruple-threaded worm four times the linear pitch, and so on.

Worm threads, that is, the teeth of a worm, have straight sides at an included angle of 29°, Fig. 256.

The Worm Cutting Tool. The width at the end of the lathe tool used for chasing a worm, or the width of the top of the tooth of the cutter when the worm thread is milled, equals the linear pitch P* of the worm multiplied by .31. This is also the width of the bottom of the space between the threads. We have, therefore

Width of cutting tool at end = P × .31.

The included angle between the sides of the tool = 29°.

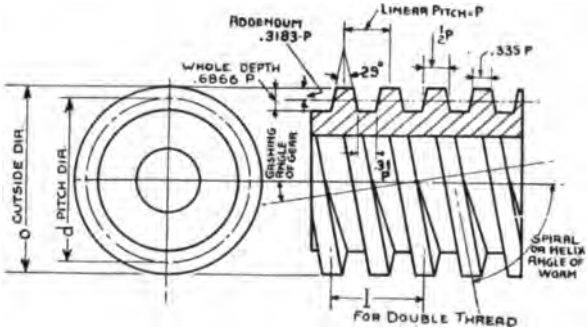

Fig. 256

The full depth or cutting depth of the worm thread = P × .6866.

A worm cut to this depth with a correct tool will have a width at top of thread = P × .335.

The Outside Diameter. The outside diameter of the worm blank is obtained by adding twice the addendum to the pitch diameter.

The addendum $S = P \times .3183$ or $\frac{P}{3.14159}$.

The outside diameter $o = P + 2S$.

The accompanying table gives the important dimensions of worm thread parts.

*P is linear pitch of worm and circular pitch of wheel, therefore, all these calculations are based on circular pitch.

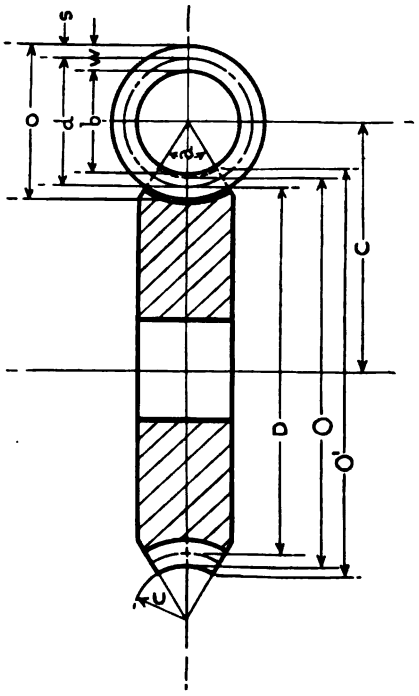

Fig. 257

To compute the necessary dimensions for a worm gear drive, the following formulas should be used in connection with Figs. 256 and 257.

P = circular pitch of wheel and linear pitch of worm.
l = lead of worm.
n = number of threads in worm.
S = addendum.
d = pitch diameter of worm.
D = pitch diameter of wormwheel.
o = outside diameter of worm.
O = throat diameter of wormwheel.
O' = diameter of wormwheel over sharp corners.
b = bottom diameter of worm.
N = number of teeth in wormwheel.
W = whole depth of worm tooth.
T = width of thread tool at end.
B = helix angle of worm.
$-B$ = gashing angle of wormwheel.
U = radius of curvature of wormwheel throat
C = center distance.

Rules and Formulas for Worm Gearing

To Find	Rule	Formula
Linear Pitch	Divide the lead by the number of threads. It is understood that by the number of threads is meant, not number of threads per inch, but the number of threads in the whole worm—one, if it is single-threaded; four, if it is quadruple-threaded, etc.	$P = \frac{l}{n}$
Addendum of Worm Tooth	Multiply the linear pitch by 0.3183	$S = 0.3183\ P$
Pitch Diameter of Worm	Subtract twice the addendum from the outside diameter	$d = o - 2\ S$
Pitch Diameter of Wormwheel	Multiply the number of teeth in the wheel by the linear pitch of the worm, and divide the product by 3.1416	$D = \frac{NP}{3.1416}$
Center Distance Between Worm and Gear	Add together the pitch diameter of the worm and the pitch diameter of the wormwheel, and divide the sum by 2	$C = \frac{D + d}{2}$
Whole Depth of Worm Tooth	Multiply the linear pitch by 0.6866	$W = 0.6866\ P$
Bottom Diameter of Worm	Subtract twice the whole depth of tooth from the outside diameter	$b = o - 2\ W$
Helix Angle of Worm	Multiply the pitch diameter of the worm by 3.1416, and divide the product by the lead; the quotient is the tangent of the helix angle of the worm	$\text{Tan } B = \frac{3.1416\ d}{l}$
Width of Thread Tool at End	Multiply the linear pitch by 0.31	$T = 0.31\ P$
Throat Diameter of Wormwheel	Add twice the addendum of the worm tooth to the pitch diameter of the wormwheel	$O = D + 2\ S$
Radius of Wormwheel Throat	Subtract twice the addendum of the worm tooth from half the outside diameter of the worm	$U = \frac{0}{2} - 2\ S$
Outside Diameter of Worm	Add together the pitch diameter and twice the addendum	$o = d + 2\ S$
Pitch Diameter of Worm	Subtract the pitch diameter of the wormwheel from twice the center distance	$d = 2\ C - D$
Diameter of Wormwheel to Sharp Corners	Multiply the radius of curvature of the wormwheel throat by the cosine of half the face angle, subtract this quantity from the radius of curvature, multiply the remainder by 2, and add the product to the throat diameter of the wormwheel	$O' = 2\left(U - U \times \cos\frac{\alpha}{2}\right) + O$
Gashing Angle of Gear	Divide the lead of the worm by the circumference of the pitch circle. The result will be the tangent of the gashing angle	$\text{Tan } (90° - B) = \frac{1}{\pi\ d}$

Table of Important Dimensions of Worm Thread Parts

No. of Threads per In.	Circular or Linear Pitch, Inches	Circ. or Linear Pitch, Decimal Equivs.	Height of Tooth above Pitch Line	Depth of Space below Pitch Line	Whole Depth of Tooth	Thickness of Tooth on Pitch Line	Width of Thread Tool at End	Width of Thread at Top
¼	2	2.0000	0.6366	0.7366	1.3732	1.0000	0.6200	0.6708
4/7	1¾	1.7500	0.5570	0.6445	1.2015	0.8750	0.5425	0.5869
2/3	1½	1.5000	0.4775	0.5524	1.0299	0.7500	0.4650	0.5031
⅘	1¼	1.2500	0.3979	0.4603	0.8582	0.6250	0.3875	0.4192
1	1	1.0000	0.3183	0.3683	0.6866	0.5000	0.3100	0.3354
1⅓	¾	0.7500	0.2387	0.2762	0.5149	0.3750	0.2325	0.2515
1½	2/3	0.6667	0.2122	0.2455	0.4577	0.3333	0.2066	0.2236
2	½	0.5000	0.1592	0.1841	0.3433	0.2500	0.1550	0.1677
2½	⅖	0.4000	0.1273	0.1473	0.2746	0.2000	0.1240	0.1341
3	⅓	0.3333	0.1061	0.1228	0.2289	0.1667	0.1033	0.1118
3½	2/7	0.2857	0.0909	0.1053	0.1962	0.1429	0.0886	0.0958
4	¼	0.2500	0.0796	0.0920	0.1716	0.1250	0.0775	0.0838
4½	2/9	0.2222	0.0707	0.0819	0.1526	0.1111	0.0689	0.0745
5	⅕	0.2000	0.0637	0.0736	0.1373	0.1000	0.0620	0.0670
6	⅙	0.1667	0.0531	0.0613	0.1144	0.0833	0.0516	0.0559
7	1/7	0.1429	0.0455	0.0526	0.0981	0.0714	0.0443	0.0479
8	⅛	0.1250	0.0398	0.0460	0.0858	0.0625	0.0387	0.0419
9	1/9	0.1111	0.0354	0.0409	0.0763	0.0556	0.0344	0.0373
10	1/10	0.1000	0.0318	0.0369	0.0687	0.0500	0.0310	0.0335
12	1/12	0.0833	0.0265	0.0307	0.0572	0.0416	0.0258	0.0279
14	1/14	0.0714	0.0227	0.0263	0.0490	0.0357	0.0221	0.0239
16	1/16	0.0625	0.0199	0.0230	0.0429	0.0312	0.0194	0.0209
18	1/18	0.0556	0.0177	0.0205	0.0382	0.0278	0.0172	0.0186

Practical Example. When computing a worm and wormwheel it is customary to assume the outside diameter of the worm (if possible make it so you can use an existing hob) and the linear pitch. The velocity ratio is, of course, given.

We will take for our example a single-threaded worm, two threads per inch. The linear pitch is therefore ½″. Assume the outside diameter to be 2.000″ and the velocity ratio 40 to 1.

As the worm is single threaded, n = 1. Therefore,
l = P × n = ½ × 1 = ½″. (The lead equals the linear pitch in this case, since the worm is single threaded.)

S = .3183 × P = .3183 × .5 = .15915″.
d = 2 − (2 × .15915) = 2 − .3183 = 1.6817″.

$$D = \frac{P \times N}{3.1416} = \frac{40 \times .5}{3.1416} = \frac{20}{3.1416} = 6.3662''.$$

$$C = \frac{D + d}{2} = \tfrac{1}{2}\,(6.3662 + 1.6817) = 4.0239.$$

$w = .6866 \times P = .6866 \times .5 = .3433.$
$b = o - 2\,w = 2 - (2 \times .3433) = 2 - .6866 = 1.3134.$

$$\text{Tangent } B = \frac{\pi \times d}{l} = \frac{3.1416 \times 1.6817}{.5} = 10.5564 \text{ therefore,}$$

$B = 84°36'$, the helix angle of worm.
The gashing angle of wormwheel $(90° - B) = 5°24'$.
$T = .31 \times P = .31 \times .5 = .155''$, the width of thread tool at end.
$O = D + 2 + S = 6.3662 + .3183 = 6.6845''$, the throat diameter of the wormwheel.

Cutting the Wormwheel. Cutting a wormwheel on a Milling Machine requires two operations; first, gashing the teeth, and second, hobbing the teeth to correct size and shape.

The gashing operation consists of roughing out the gear teeth. The cutter should be an involute cutter of the same diameter and pitch as the worm threads.

The wormwheel to be gashed is held between centers, Fig. 258, and the table of the machine is moved longitudinally to bring the cutter central over the work, having first made sure that the cutter is central with the dividing head center, as when cutting spur gears; then the milling machine table is swiveled to an angle corresponding with the gashing angle. For wormwheels driven by a right-hand worm, that is, wheels finished by a right hand hob, swivel the milling machine table toward your right hand (when facing either end of the table), and for wormwheels driven by left-hand worms, swivel it to the left. The work is fed VERTICALLY into the cutter to the desired depth for each tooth. The work is indexed the same as a spur gear. This gashing operation should be carried out so as to leave only a small amount of metal on the sides and bottom of the teeth for the final finishing or hobbing operation.

The Gashing Angle. The gashing angle for the gear depends on the diameter and lead of the WORM. It is found by dividing the lead of the worm by the circumference of its pitch circle which gives the tangent of the desired angle.

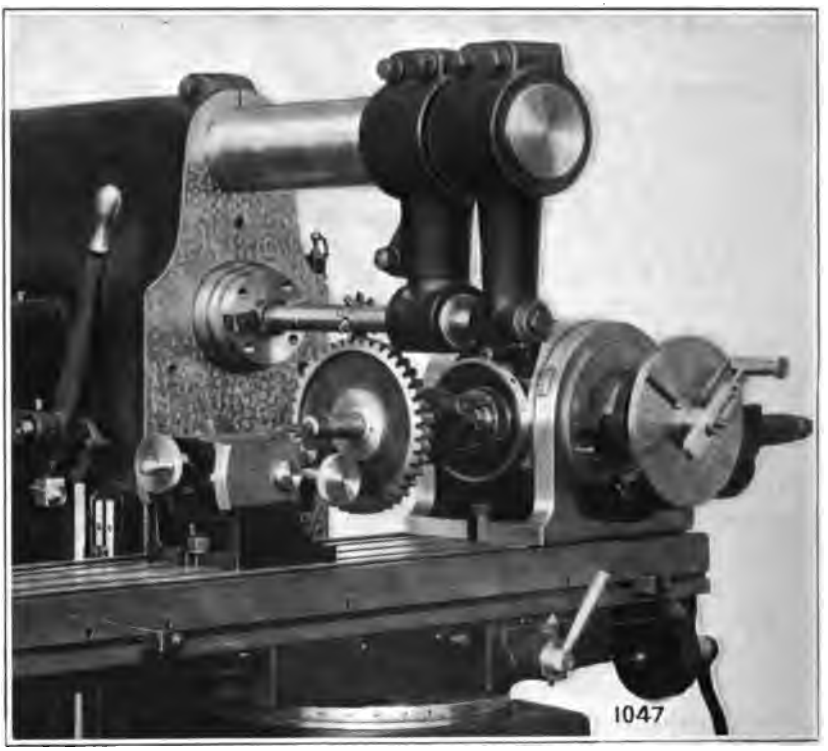

Fig. 258

Gashing a wormwheel. Table is swiveled the amount of the gashing angle, and the work is fed vertically to the cutter.

$$\text{Tangent of gashing angle} = \frac{\text{Lead of worm}}{\text{Circumference of pitch circle}};$$

that is,

$$\tan\,(90° - B) = \frac{1}{\pi\,d}.$$

The angle may then be read from a table of natural tangents. The gashing angles for wormwheels for a variety of worms from $\frac{5}{8}''$ to 6″ diameter andfrom $^1/_{10}''$ to $1\frac{1}{2}''$ lead may be taken directly from the table at the end of this chapter.

For example: Suppose we have a worm 3″ pitch diameter, $\frac{1}{2}''$ lead or two threads per inch, which is the same thing. We find in the column opposite $\frac{1}{2}''$ lead and under 3″ P. D., 3°2′, which is the gashing angle for the gear that will work with that worm.

Hobbing the Wormwheel. For the hobbing operation the wormwheel must be so held between centers that it can revolve freely, because IT MUST BE DRIVEN BY THE HOB. If the worm and wormwheel have shafts at right angles (which is the usual form) the table of the milling machine must be set straight; that is, at right angles with the cutter arbor, Fig. 259.

The gashing cutter must be replaced by a hob of proper size and pitch. The hob must, of course, be central over the rim of the wormwheel and the table should be locked in position to insure

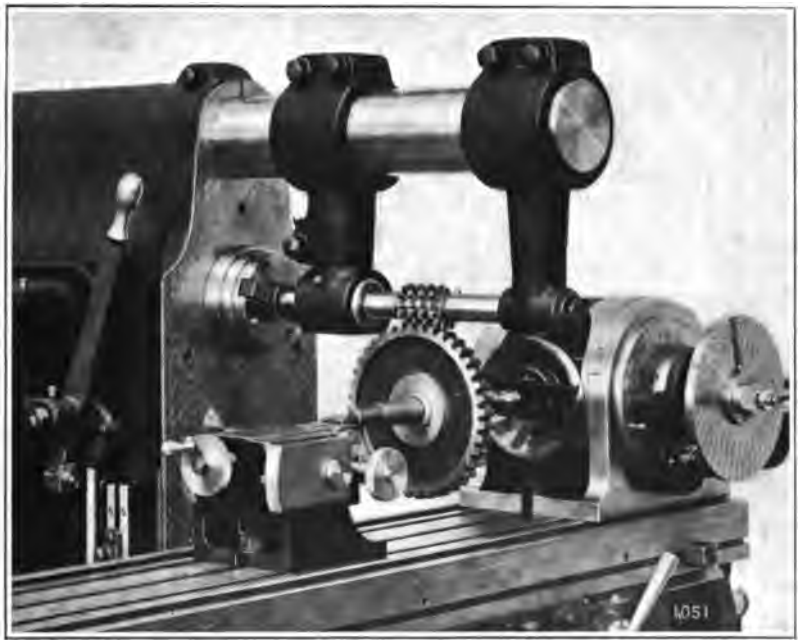

Fig. 259
Hobbing a wormwheel.

against movement. When the machine has been started, raise the knee until the hob has cut to the proper depth. If excessive stock has been left to be removed, or if an exceptionally good finish is wanted, it is best to revolve the wormwheel under the hob a number of times, bringing it to final finish depth for the last cut or revolution.

Special hobbing attachments are sometimes provided for the milling machine, which are arranged for positively driving the work

spindle by means of gears from the machine spindle so as to insure positive rotation of the gear in exactly the correct ratio with the hob. With such an attachment the preliminary gashing operation can be omitted.

Gashing Angles for Wormwheels

Lead of Wrm. in In.	No. of Thr'ds per In. in Worm	PITCH DIAMETER OF WORM															
		¾	¾	⅞	1	1⅛	1¼	1⅜	1½	1⅝	1¾	1⅞	2	2⅛	2¼	2⅜	2½
1/10	10	2°55′	2°26′	2° 5′	1°49′	1°37′	1°28′	1°20′	1°13′	1° 7′	1° 2′	58′	55′	52′	49′	46′	44′
1/9	9	3°14′	2°42′	2°19′	2° 1′	1°48′	1°37′	1°28′	1°21′	1°15′	1° 9′	1° 5′	1° 1′	57′	54′	51′	49′
1/8	8	3°38′	3° 2′	2°36′	2°17′	2° 2′	1°49′	1°39′	1°31′	1°24′	1°18′	1°13′	1° 8′	1° 4′	1° 1′	58′	54′
1/7	7	4°10′	3°28′	2°58′	2°36′	2°19′	2° 5′	1°54′	1°44′	1°36′	1°29′	1°23′	1°18′	1°14′	1° 9′	1° 6′	1° 3′
1/6	6	4°51′	4° 3′	3°28′	3° 2′	2°42′	2°26′	2°13′	2° 1′	1°52′	1°44′	1°37′	1°31′	1°26′	1°21′	1°17′	1°13′
1/5	5	5°49′	4°51′	4°10′	3°39′	3°14′	2°55′	2°39′	2°26′	2°15′	2° 5′	1°57′	1°49′	1°43′	1°37′	1°32′	1°27′
1/4	4	7°16′	6° 4′	5°12′	4°33′	4° 3′	3°39′	3°19′	3° 2′	2°48′	2°36′	2°26′	2°17′	2° 9′	2° 2′	1°55′	1°49′
2/7	3½	8°17′	6°55′	5°56′	5°12′	4°37′	4°10′	3°47′	3°28′	3°12′	2°58′	2°47′	2°36′	2°27′	2°19′	2°12′	2° 5′
1/3	3	9°38′	8° 3′	6°55′	6° 3′	5°23′	4°51′	4°25′	4° 3′	3°44′	3°28′	3°14′	3° 2′	2°52′	2°42′	2°33′	2°26′
4/11	2¾	10°30′	8°46′	7°32′	6°36′	5°52′	5°17′	4°49′	4°25′	4° 4′	3°47′	3°32′	3°19′	3° 7′	2°57′	2°47′	2°39′
3/8	2⅔	10°49′	9° 3′	7°46′	6°48′	6° 4′	5°27′	4°58′	4°33′	4°12′	3°54′	3°39′	3°25′	3°13′	3° 2′	2°53′	2°44′
2/5	2½	11°31′	9°38′	8°17′	7°15′	6°27′	5°49′	5°17′	4°51′	4°29′	4°10′	3°53′	3°39′	3°26′	3°14′	3° 4′	2°55′
4/9	2¼	.....	.....	.....	8° 3′	7°10′	6°27′	5°52′	5°23′	4°59′	4°37′	4°19′	4° 3′	3°46′	3°36′	3°25′	3°14′
1/2	2	.....	.....	.....	.....	.....	7°15′	6°36′	6° 3′	5°36′	5°12′	4°51′	4°33′	4°17′	4° 3′	3°50′	3°39′
4/7	1¾	.....	.....	.....	.....	.....	.....	.....	6°55′	6°23′	5°56′	5°32′	5°12′	4°54′	4°37′	4°23′	4°10′
2/3	1½	.....	.....	.....	.....	.....	.....	.....	.....	.....	.....	6°27′	6° 3′	5°42′	5°23′	5° 6′	4°51′
3/4	1⅓	.....	.....	.....	.....	.....	.....	.....	.....	.....	.....	.....	.....	6°25′	6° 3′	5°44′	5°27′
4/5	1¼	.....	.....	.....	.....	.....	.....	.....	.....	.....	.....	.....	.....	.....	.....	6° 7′	5°49′
1	1	.....	.....	.....	.....	.....	.....	.....	.....	.....	.....	.....	.....	.....	.....	.....	.....
1¼	¾	.....	.....	.....	.....	.....	.....	.....	.....	.....	.....	.....	.....	.....	.....	.....	.....
1½	⅔	.....	.....	.....	.....	.....	.....	.....	.....	.....	.....	.....	.....	.....	.....	.....	.....

Lead of Wrm. in In.	No. of Thr'ds per In. in Worm	PITCH DIAMETER OF WORM														
		2⅝	2¾	2⅞	3	3¼	3½	3¾	4	4¼	4½	4¾	5	5¼	5½	5¾	6
1/10	10	.....	.....	.....	.....	.....	.....	.....	.....	.....	.....	.....	.....	.....	.....	.....	.....
1/9	9	.....	.....	.....	.....	.....	.....	.....	.....	.....	.....	.....	.....	.....	.....	.....	.....
1/8	8	52′	50′	48′	46′	42′	39′	36′	34′	32′	.....	.....	.....	.....	.....	.....	.....
1/7	7	1°	57′	54′	52′	48′	45′	42′	39′	37′	35′	33′	.....	.....	.....	.....	.....
1/6	6	1° 9′	1° 6′	1° 3′	1° 1′	56′	52′	48′	46′	43′	40′	38′	36′	35′	.....	.....	.....
1/5	5	1°23′	1°20′	1°16′	1°13′	1° 7′	1° 3′	58′	55′	52′	49′	46′	44′	42′	40′	38′	.....
1/4	4	1°44′	1°39′	1°35′	1°31′	1°24′	1°18′	1°13′	1° 8′	1° 4′	1° 1′	58′	55′	52′	50′	48′	46′
2/7	3½	1°59′	1°54′	1°49′	1°44′	1°36′	1°29′	1°23′	1°18′	1°14′	1° 9′	1° 6′	1° 3′	1° 1′	57′	54′	52′
1/3	3	2°19′	2°13′	2° 7′	2° 2′	1°52′	1°44′	1°37′	1°31′	1°26′	1°21′	1°17′	1°13′	1° 9′	1° 6′	1° 3′	1° 1′
4/11	2¾	2°31′	2°25′	2°18′	2°13′	2° 2′	1°54′	1°46′	1°39′	1°34′	1°28′	1°24′	1°20′	1°16′	1°12′	1° 9′	1° 6′
3/8	2⅔	2°36′	2°29′	2°23′	2°17′	2° 6′	1°57′	1°49′	1°43′	1°37′	1°31′	1°26′	1°22′	1°18′	1°15′	1°11′	1° 8′
2/5	2½	2°47′	2°39′	2°32′	2°26′	2°14′	2° 5′	1°57′	1°49′	1°43′	1°37′	1°32′	1°28′	1°23′	1°20′	1°16′	1°13′
4/9	2¼	3° 5′	2°57′	2°49′	2°42′	2°30′	2°19′	2°10′	2° 2′	1°54′	1°48′	1°42′	1°37′	1°33′	1°28′	1°24′	1°21′
1/2	2	3°28′	3°19′	3°10′	3° 2′	2°48′	2°36′	2°26′	2°17′	2° 9′	2° 2′	1°55′	1°49′	1°44′	1°39′	1°35′	1°31′
4/7	1¾	3°58′	3°47′	3°37′	3°28′	3°12′	2°59′	2°47′	2°36′	2°27′	2°19′	2°12′	2° 5′	1°59′	1°54′	1°49′	1°44′
2/3	1½	4°37′	4°25′	4°13′	4° 3′	3°44′	3°28′	3°14′	3° 2′	2°52′	2°42′	2°33′	2°26′	2°19′	2°13′	2° 7′	2° 1′
3/4	1⅓	5°12′	4°58′	4°45′	4°33′	4°12′	3°54′	3°39′	3°25′	3°13′	3° 2′	2°53′	2°44′	2°36′	2°29′	2°23′	2°17′
4/5	1¼	5°32′	5°17′	5° 4′	4°51′	4°29′	4°10′	3°53′	3°39′	3°26′	3°14′	3° 4′	2°55′	2°47′	2°39′	2°32′	2°26′
1	1	6°55′	6°36′	6°19′	6° 3′	5°36′	5°12′	4°51′	4°33′	4°17′	4° 3′	3°50′	3°39′	3°28′	3°19′	3°10′	3° 2′
1¼	¾	.....	.....	8°24′	8° 3′	7°26′	6°54′	6°27′	6° 4′	5°42′	5°23′	5° 6′	4°51′	4°37′	4°25′	4°13′	4° 2′
1½	⅔	.....	.....	.....	9° 3′	8°22′	7°46′	7°15′	6°49′	6°26′	6° 4′	6°44′	5°27′	5°12′	4°58′	4°45′	4°33′

CHAPTER XVIII

CONTINUED FRACTIONS
ANGULAR INDEXING

Angular Indexing. The tables on pages 329-30-31 will be found convenient for angular indexing when it is desired to space holes or notches a given number of degrees and minutes apart. These tables contain all that is required in the great majority of cases. They give angles that may be obtained with the index plate regularly furnished with the Cincinnati Universal Dividing Head and are accurate to within one-half a minute, with the exception of those few in heavy type. In these the error is somewhat greater and may amount to a minute or slightly more. The tables give angles advancing by minutes from 3′ up to 9°, which corresponds to one full turn of the index handle. For larger angles we make one full turn for each 9° plus the reading in the table corresponding to the fractional degrees and minutes. For example, to index spaces 20°15′ apart, two turns give an 18° space, and for the 2°15′ we find in the table a spacing of 7 holes in the 28 circle. The entire spacing is, therefore, using the 28 circle, 2 turns 7 holes. When it is desired to space angles to closer limits than those given in the tables the spacing can be computed by following the comparatively simple method of Continued Fractions described below.

Computing the Spacing. Suppose the drawing comes to the shop showing a spacing of 37°34′29″, and the nature of the work makes it desirable to come as close to this as is practical with a Universal Dividing Head.

One turn of the index crank produces an angle of 9° because 40 turns produce one complete turn of the spindle, or 360°. We note right away that we can make four complete turns which makes 36° and there is left an angle of 1°34′29″. The question is now, what circle of holes shall we use and how many spaces should be indexed. One complete turn of the index crank makes 9°, or 32400″. We must make an angle of 1° (which is 3600 seconds), 34′ (which is 2040 seconds), and 29″, or altogether 5669″. It is, therefore,

necessary to make $\frac{5669}{32400}$ of a full turn of the index crank. This would be easy enough if we had a circle with 32,400 holes, but, of course, this is not the case. We must, therefore, find some other fraction which has a much smaller denominator and a value very close to the given fraction. If we can find one in which the denominator is the number of holes in one of the circles, we have an easy way of spacing this angle.

Greatest Common Divisor. If two numbers have a common divisor, such, for instance, as 21 and 77, which have the common divisor 7, then, if we should subtract 21 from 77 the remainder will also have this divisor 7 as a factor; and if we subtract several times 21 from 77 that remainder also has the factor 7; in other words, if 21 and 77 have a common divisor, and we should divide 21 into 77, the remainder of the division can also be divided by 7. If then we should divide this remainder into the 21, the remainder of this new division would also have this factor 7. We could keep this up, always dividing the remainder of the last division into the divisor of this last division, until finally the division would leave no remainder, then the last divisor would be the greatest common divisor.

$$
\begin{array}{r}
21\overline{)77}(3 \\
\underline{63} \\
14\overline{)21}(1 \\
\underline{14} \\
7\overline{)14}(2 \\
\underline{14} \\
0
\end{array}
$$

Seven being the last divisor is the greatest common divisor.

Continued Fractions. In the following example, we will assume a fraction $\frac{943}{1727}$. Here we will find that there is no greatest common divisor.

```
943)1727(1
   943
   784)943(1
       784
       159)784(4
           636
           148)159(1
               148
               11)148(13
                  11
                  38
                  33
                   5)11(2
                     10
                      1)5(5
                        5
                        0
```

We will now show how it would be possible to find the original figures, 943 and 1727, if nothing but the quotients were given. We know that the last divisor was 1, the remainder is 0 and the quotient is 5, therefore the dividend must have been five times 1, or 5. The previous divisor, therefore, is also 5. The quotient was 2 and the remainder was 1, so we find that the dividend there must have been 2 times 5 plus 1 equals 11. The previous divisor, therefore, was 11, and the dividend was 13 times 11 plus 5 equals 148. Consequently, the previous divisor was 148. We could go on this way by always multiplying the last quotient by the last divisor and adding the last remainder, and using this resulting number as the previous divisor. But there is a much simpler way of doing this very thing.

Prepare a diagram as in Fig. 260 and place the quotients from our continued fraction in the spaces above the line from left to right beginning with the last quotient.

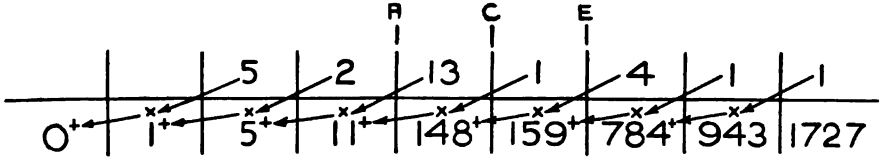

Fig. 260

In the spaces below the line, but beginning two spaces to the left of the last quotient we write 0, which was the last remainder, and to the right of it 1, which was the last divisor.

By following a system of multiplication and addition, as indicated above, by following the arrows in Fig. 260, we get $5 \times 1 + 0 = 5$, which was the next to the last divisor. This is placed in the space to the right of the last divisor, which brings it below the last quotient. In the same way $2 \times 5 + 1 = 11$ and $13 \times 11 + 5 = 148$, $1 \times 148 + 11 = 159$ and so on until we finally get back to the original numbers 943 and 1727.

Now it is a peculiar property of numbers that, if we should cut off part of this operation, say along the line A; in other words, if we should start with 13 instead of 5, making a diagram as in Fig. 261, we will get another fraction but which is very close in value to the original fraction.

		13	1	4	1	1
0	1	13	14	69	83	152

Fig. 261

Another peculiar property of numbers is that if we should cut off at A and find that the resulting fraction is a little too large, then, if we cut off at C, one place further to the right, the fraction would be a little too small, and if we should start at E the fraction would be too large again, and so on. The value of these approximating fractions would move somewhat like the wave line in Fig. 262.

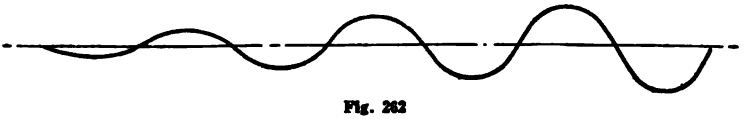

Fig. 262

The straight line represents the true value of our original fraction and the wave line represents the value of the approximating fractions. It will be seen that these approximating fractions go alternately above and below the real value and that they gradually go farther and farther away from that value.

The diagram, Fig. 261, shows that the resulting fraction if we started on the line A would be $\frac{83}{152}$. If we reduce the original fraction $\frac{943}{1727}$ to a decimal fraction we get .54603, and reducing the

approximate fraction $\frac{83}{152}$ we get .54605, or a difference of .00002. In other words, we have an error of 2 in a total of 54600, which is a very small error indeed. If this fraction had been used for spacing, the holes or notches thus spaced might have been nearly $5\frac{1}{2}''$ apart with an error of only .0002. Returning now to our problem of spacing $\frac{5669}{32400}$. We carry a continuous division,

$$
\begin{array}{l}
5669)32400(5 \\
\quad \underline{28345} \\
\quad 4055)5669(1 \\
\quad\quad \underline{4055} \\
\quad\quad 1614)4055(2 \\
\quad\quad\quad \underline{3228} \\
\quad\quad\quad 827)1614(1 \\
\quad\quad\quad\quad \underline{827} \\
\quad\quad\quad\quad 787)827(1 \\
\quad\quad\quad\quad\quad \underline{787} \\
\quad\quad\quad\quad\quad 40)787(19 \\
\quad\quad\quad\quad\quad\quad \underline{40} \\
\quad\quad\quad\quad\quad\quad 387 \\
\quad\quad\quad\quad\quad\quad \underline{360} \\
\quad\quad\quad\quad\quad\quad 27)40(1 \\
\quad\quad\quad\quad\quad\quad\quad \underline{27} \\
\quad\quad\quad\quad\quad\quad\quad 13)27(2 \\
\quad\quad\quad\quad\quad\quad\quad\quad \underline{26} \\
\quad\quad\quad\quad\quad\quad\quad\quad 1)13(13 \\
\quad\quad\quad\quad\quad\quad\quad\quad\quad \underline{13} \\
\quad\quad\quad\quad\quad\quad\quad\quad\quad 0
\end{array}
$$

just like in the previous example and then we ignore the last four quotients, keeping only the quotients 5, 1, 2, 1 and 1, Fig. 263.

.			1	1	2	1	5	
	0	1	1	2	5	7	40	

Fig. 263

We set these five quotients up in our diagram as before, and find the approximate fraction $\frac{7}{40}$, which means that we have to take 7 spaces on the 40 hole circle. $\frac{7}{40}$ of a circle is $\frac{7}{40}$ of 9°, or $\frac{7}{40}$ of 32400

seconds. This is 5670 seconds, whereas what we want is 5669 seconds. This shows that we have missed our angle by one second.

However, we meet a new difficulty here. We find that we must take 7 spaces on a 40 hole circle, but there is no such circle on the standard index plate. If there should be great need of extreme accuracy a special plate with a 40 hole circle could be made, but, as a rule, the accuracy required is not so great, nor would the dividing head permit of such extreme accuracy as an error of less than one second. Such extreme accuracy is only found in the most refined astronomical instruments and has no place in the machine shop. Instead, then, of making a special plate with a 40 hole circle we cut off the next quotient, leaving only the quotients 1, 2, 1 and 5, Fig. 264.

		1	2	1	5	
0	1	1	3	4	23	

Fig. 264

This will give us the fraction $\frac{4}{23}$, and this is easily obtainable by using the 46 hole circle and taking 8 spaces. $\frac{4}{23}$ of 9° gives us 5635 seconds, whereas we wanted 5669 seconds, so that our space is 34 seconds too small. Even this is a high degree of accuracy, the error being only about $\frac{1}{20}$ of what it would be with the ordinary method of circular indexing.

We could have cut off still another quotient and used only the figures 2, 1 and 5, in which case we would have found the fraction $\frac{3}{17}$, Fig. 265.

		2	1	5
0	1	2	3	17

Fig. 265

This means that we would have had to use the 34 hole circle and take 6 spaces. The result would have been 5717 instead of 5669 seconds, or an error of 48 seconds. Even this is a great improvement over the regular method. You will note that with five

quotients we were 1 second LARGE; with four quotients 34 seconds SMALL; and with three quotients we were 48 seconds LARGE.*

The method of continued fractions is useful in a great many other instances, of which two examples are given.

Application to Gearing a Lathe to Cut Metric Threads. We know that if we have a standard lead screw on a lathe and want to cut metric threads we must introduce a pair of compound gears which will make up for the difference between metric and English pitches. If, for instance, we have a ¼″ pitch lead screw and want the lathe to work as if the pitch of the screw were 6 millimeters, we put a pair of compound gears in the feed mechanism of 125 and 127 teeth respectively. If the pitch of the lead screw is ½″ and we want to make the lathe work as if the lead screw had a pitch of 10 millimeters, we introduce a pair of compound gears of 100 and 127 teeth respectively. Now, such gears of 100 and 127 teeth are quite large and it will generally be found that it is impractical to put such gears into an existing mechanism. The numbers 100 and 127 are relatively prime and it is not possible to find another fraction of the same value by canceling. We resort, therefore, to our method of continued fractions. We make the continuous division of 100 and 127 and ignore first one and then perhaps two or more of the last quotients until we find a fraction which is sufficiently small, and then we test this fraction for its accuracy. Ignoring the last quotient we obtain the fraction $\frac{37}{47}$, which means that we will have to use two gears of 37 and 47 teeth respectively. These numbers are quite practical and it should be easy to introduce a pair of gears of that size into a mechanism. In order to test out the accuracy

*It does not matter which of the two numbers comprising a fraction is divided into the other. It is simplest to divide the smaller into the larger to avoid decimals. However, in arranging the figures composing our new equivalent fraction we must remember that

b. If we use the denominator as a divisor, the LAST divisor produced becomes the NUMERATOR of our equivalent fraction since the natural relation is not disturbed.

c. If we use the numerator as the divisor, which happens to be the case in the examples given here, we have reversed the natural relation and now the last divisor produced becomes the DENOMINATOR of the equivalent fraction, thus,

$$\frac{943}{1727},\ 943)1727(= \frac{83}{152}$$

of this fraction we reduce $\frac{100}{127}$ and $\frac{37}{47}$ to decimal fractions and find that there is a difference of 17 in a total of 78740, which is quite accurate enough for all but the very finest work. If we had cut off one more quotient we would have found the approximating fraction $\frac{26}{33}$, which is quite convenient, but not quite so accurate. The error in this case is 48 in a total of 78740; in other words, nearly three times as much as with the fraction $\frac{37}{47}$.

Application to Computing Change Gears for Cutting Spirals. Another application of this method is to be found in computing the change gears required to cut a spiral of given lead. A Dividing Head is furnished with a certain number of change gears which are quite sufficient for all ordinary work, and this book contains a table of the leads which can be cut with these change gears. The teeth in reamers, taps, cutters, etc., can easily be cut with these change gears. Even spiral gears can, as a rule, be cut without using any other change gears than the ones supplied. However, some times spiral gears must be cut with great accuracy and a relatively small variation in the lead is not permissible. In Chapter XVI, on spiral gear cutting, we showed that the lead is found by the simple formula:

$$\text{Lead} = \frac{\text{pitch circumference}}{\text{tangent of spiral angle}}$$

and from this it follows that the lead is usually a decimal fraction and it would be strange indeed if this fraction could always be found in the table of leads.

Assume that we have to cut a spiral gear having a lead of 5.8042″. Consulting our table of leads we find that the nearest leads given are 5.788 and 5.833. Neither of these two leads is close enough for very accurate work. Since the $\frac{\text{driven gears}}{\text{driving gears}} = \frac{\text{lead}^*}{10}$ our fraction is $\frac{5.8042}{10}$. This is an awkward fraction to reduce into suitable form for conversion into change gears. We will therefore carry out our method of continued fractions. For convenience we multiply

*See Chapter XIX, page 332.

both numerator and denominator by 10,000 in order to get rid of the decimal. This, of course, does not change the value of the fraction, which now is $\frac{58042}{100000}$.

We now have

```
58042)100000(1
      58042
      41958)58042(1
            41958
            16084)41958(2
                  32168
                   9790)16084(1
                        9790
                        6294)9790(1
                             6294
                             3496)6294(1
                                  3496
                                  2798)3496(1
                                       2798
                                        698)2798(4
                                            2792
                                               6)698(116
                                                 6
                                                 9
                                                 6
                                                 38
                                                 36
                                                  2)6(3
                                                    6
                                                    0
```

Dropping the last three quotients and applying our diagram, we get

		1	1	1	1	2	1	1
0	2	2	4	6	10	26	36	62

Our approximately equivalent fraction is therefore $\frac{36}{62}$. Testing this for accuracy, we divide 62 into 36, which gives us .580645. However, we must remember that we started with a fraction which represented the lead divided by 10. This approximate equivalent is therefore also $\frac{1}{10}$ of the lead. Multiplying it by 10 we therefore

get 5.80645 as our approximate lead, which compared with the actual lead of 5.8042 shows that our new approximation is .00225" long. This, however, is so small an error that it is not likely to lead into difficulties.

We will, therefore, split up our fraction $\frac{36}{62}$ and convert it into suitable change gears. Thus

$$\frac{36}{62} = \frac{4 \times 9}{6.2 \times 10}$$

$$\frac{4}{6.2} \times \frac{10}{10} = \frac{40}{62}; \quad \frac{9}{10} \times \frac{6}{6} = \frac{54}{60}$$

Our change gears therefore are

$$\frac{40 \times 54}{62 \times 60} = \frac{\text{driven gears}}{\text{driving gears}} = \frac{\text{.2d Intermediate} \times \text{Gear on worm}}{\text{1st Intermediate} \times \text{Gear for screw}}$$

We therefore put the 40 tooth gear on the second intermediate stud, the 54 tooth gear on the worm shaft, the 62 tooth gear on the first intermediate stud, and the 60 tooth gear on the stud in the segment, which runs at the same speed as the screw.

Table for Angular Indexing on the Universal Dividing Head

Degrees	Minutes	Circle	Space	Degrees	Minutes	Circle	Space	Degrees	Minutes	Circle	Space	Degrees	Minutes	Circle	Space
0	1	....	....	0	53	51	5	1	45	41	8	2	37	62	18
0	2	....	....	0	54	30	3	1	46	51	10	2	38	41	12
0	3	181	1	0	55	59	6	1	47	**30**	**6**	2	39	51	15
0	4	137	1	0	56	58	6	1	48	30	6	2	40	54	16
0	5	107	1	0	57	57	6	1	49	**54**	**11**	2	41	47	14
0	6	181	2	0	58	28	3	1	50	54	11	2	42	30	9
0	7	77	1	0	59	46	5	1	51	34	7	2	43	53	16
0	8	66	1	1	0	54	6	1	52	53	11	2	44	66	20
0	9	59	1	1	1	62	7	1	53	43	9	2	45	59	18
0	10	54	1	1	2	**43**	**5**	1	54	57	12	2	46	39	12
0	11	49	1	1	3	43	5	1	55	47	10	2	47	42	13
0	12	46	1	1	4	59	7	1	56	28	6	2	48	58	18
0	13	42	1	1	5	25	3	1	57	37	8	2	49	51	16
0	14	39	1	1	6	49	6	1	58	**59**	**13**	2	50	54	17
0	15	37	1	1	7	24	3	1	59	59	13	2	51	41	13
0	16	34	1	1	8	24	3	2	0	54	12	2	52	66	21
0	17	62	2	1	9	47	6	2	1	58	13	2	53	53	17
0	18	30	1	1	10	54	7	2	2	62	14	2	54	59	19
0	19	57	2	1	11	38	5	2	3	66	15	2	55	37	12
0	20	54	2	1	12	30	4	2	4	**39**	**9**	2	56	46	15
0	21	51	2	1	13	37	5	2	5	39	9	2	57	58	19
0	22	49	2	1	14	51	7	2	6	30	7	2	58	**58**	**19**
0	23	47	2	1	15	43	6	2	7	51	12	2	59	**54**	**18**
0	24	**47**	**2**	1	16	57	8	2	8	38	9	3	0	54	18
0	25	43	2	1	17	42	6	2	9	46	11	3	1	**54**	**18**
0	26	62	3	1	18	62	9	2	10	54	13	3	2	**59**	**20**
0	27	59	3	1	19	41	6	2	11	66	16	3	3	59	20
0	28	58	3	1	20	54	8	2	12	49	12	3	4	47	16
0	29	37	2	1	21	**66**	**10**	2	13	**49**	**12**	3	5	38	13
0	30	54	3	1	22	66	10	2	14	**28**	**7**	3	6	58	20
0	31	53	3	1	23	39	6	2	15	28	7	3	7	49	17
0	32	34	2	1	24	58	9	2	16	**28**	**7**	3	8	66	23
0	33	49	3	1	25	38	6	2	17	59	15	3	9	57	20
0	34	47	3	1	26	25	4	2	18	47	12	3	10	54	19
0	35	62	4	1	27	62	10	2	19	66	17	3	11	51	18
0	36	30	2	1	28	43	7	2	20	54	14	3	12	59	21
0	37	58	4	1	29	**54**	**9**	2	21	57	15	3	13	42	15
0	38	57	4	1	30	54	9	2	22	38	10	3	14	39	14
0	39	42	3	1	31	**47**	**8**	2	23	34	9	3	15	47	17
0	40	54	4	1	32	47	8	2	24	30	8	3	16	66	24
0	41	66	5	1	33	58	10	2	25	41	11	3	17	**66**	**24**
0	42	51	4	1	34	46	8	2	26	37	10	3	18	30	11
0	43	25	2	1	35	57	10	2	27	66	18	3	19	38	14
0	44	49	4	1	36	62	11	2	28	62	17	3	20	54	20
0	45	24	2	1	37	39	7	2	29	58	16	3	21	43	16
0	46	47	4	1	38	66	12	2	30	54	15	3	22	**43**	**16**
0	47	46	4	1	39	49	9	2	31	25	7	3	23	**53**	**20**
0	48	34	3	1	40	54	10	2	32	39	11	3	24	53	20
0	49	66	6	1	41	59	11	2	33	53	15	3	25	58	22
0	50	54	5	1	42	53	10	2	34	49	14	3	26	42	16
0	51	53	5	1	43	42	8	2	35	66	19	3	27	47	18
0	52	62	6	1	44	57	11	2	36	38	11	3	28	39	15

Table for Angular Indexing on the Universal Dividing Head

Degrees	Minutes	Circle	Space	Degrees	Minutes	Circle	Space	Degrees	Minutes	Circle	Space	Degrees	Minutes	Circle	Space
3	29	62	24	4	21	62	30	5	13	38	22	6	5	37	25
3	30	54	21	4	22	66	32	5	14	43	25	6	6	59	40
3	31	41	16	4	23	39	19	5	15	24	14	6	7	25	17
3	32	28	11	4	24	47	23	5	16	41	24	6	8	66	45
3	33	38	15	4	25	53	26	5	17	46	27	6	9	41	28
3	34	53	21	4	26	**53**	**26**	5	18	34	20	6	10	54	37
3	35	**53**	**21**	4	27	**53**	**26**	5	19	66	39	6	11	51	35
3	36	30	12	4	28	**54**	**27**	5	20	54	32	6	12	58	40
3	37	**57**	**23**	4	29	**54**	**27**	5	21	37	22	6	13	42	29
3	38	57	23	4	30	54	27	5	22	62	37	6	14	39	27
3	39	37	15	4	31	199	100	5	23	**62**	**37**	6	15	59	41
3	40	54	22	4	32	137	69	5	24	30	18	6	16	66	46
3	41	66	27	4	33	89	45	5	25	**30**	**18**	6	17	53	37
3	42	51	21	4	34	67	34	5	26	53	32	6	18	30	21
3	43	46	19	4	35	53	27	5	27	38	23	6	19	57	40
3	44	41	17	4	36	47	24	5	28	28	17	6	20	54	38
3	45	24	10	4	37	39	20	5	29	41	25	6	21	34	24
3	46	43	18	4	38	66	34	5	30	54	33	6	22	41	29
3	47	57	24	4	39	62	32	5	31	62	38	6	23	62	44
3	48	**57**	**24**	4	40	54	28	5	32	39	24	6	24	38	27
3	49	66	28	4	41	25	13	5	33	47	29	6	25	66	47
3	50	54	23	4	42	46	24	5	34	42	26	6	26	28	20
3	51	49	21	4	43	42	22	5	35	58	36	6	27	53	38
3	52	**51**	**22**	4	44	57	30	5	36	53	33	6	28	39	28
3	53	51	22	4	45	53	28	5	37	24	15	6	29	25	18
3	54	30	13	4	46	34	18	5	38	24	15	6	30	54	39
3	55	62	27	4	47	47	25	5	39	43	27	6	31	58	42
3	56	**62**	**27**	4	48	30	16	5	40	54	34	6	32	62	45
3	57	41	18	4	49	43	23	5	41	38	24	6	33	66	48
3	58	59	26	4	50	54	29	5	42	30	19	6	34	37	27
3	59	43	19	4	51	39	21	5	43	**66**	**42**	6	35	41	30
4	0	54	24	4	52	37	20	5	44	66	42	6	36	30	22
4	1	47	21	4	53	59	32	5	45	47	30	6	37	34	25
4	2	58	26	4	54	57	31	5	46	39	25	6	38	38	28
4	3	**58**	**26**	4	55	66	36	5	47	42	27	6	39	46	34
4	4	62	28	4	56	62	34	5	48	59	38	6	40	54	40
4	5	66	30	4	57	**58**	**32**	5	49	34	22	6	41	66	49
4	6	57	26	4	58	58	32	5	50	54	35	6	42	47	35
4	7	59	27	4	59	47	26	5	51	**54**	**35**	6	43	59	44
4	8	37	17	5	0	54	30	5	52	46	30	6	44	**28**	**21**
4	9	39	18	5	1	43	24	5	53	49	32	6	45	28	21
4	10	54	25	5	2	59	33	5	54	58	38	6	46	**28**	**21**
4	11	43	20	5	3	41	23	5	55	38	25	6	47	57	43
4	12	30	14	5	4	**41**	**23**	5	56	47	31	6	48	49	37
4	13	47	22	5	5	62	35	5	57	59	39	6	49	66	50
4	14	34	16	5	6	30	17	5	58	**59**	**39**	6	50	54	41
4	15	53	25	5	7	51	29	5	59	**54**	**36**	6	51	46	35
4	16	57	27	5	8	**28**	**16**	6	0	54	36	6	52	38	29
4	17	42	20	5	9	28	16	6	1	**54**	**36**	6	53	51	39
4	18	46	22	5	10	54	31	6	2	**58**	**39**	6	54	30	23
4	19	25	12	5	11	66	38	6	3	58	39	6	55	39	30
4	20	54	26	5	12	57	33	6	4	46	31	6	56	**39**	**30**

Table for Angular Indexing on the Universal Dividing Head

Degrees	Minutes	Circle	Space	Degrees	Minutes	Circle	Space	Degrees	Minutes	Circle	Space	Degrees	Minutes	Circle	Space
6	57	57	44	7	28	47	39	7	59	62	55	8	30	54	51
6	58	62	48	7	29	47	39	8	0	54	48	8	31	57	54
6	59	58	45	7	30	54	45	8	1	46	41	8	32	58	55
7	0	54	42	7	31	43	36	8	2	28	25	8	33	59	56
7	1	59	46	7	32	43	36	8	3	38	34	8	34	62	59
7	2	59	46	7	33	62	52	8	4	58	52	8	35	43	41
7	3	37	29	7	34	25	21	8	5	59	53	8	36	66	63
7	4	28	22	7	35	38	32	8	6	30	27	8	37	47	45
7	5	47	37	7	36	58	49	8	7	51	46	8	38	49	47
7	6	38	30	7	37	39	33	8	8	62	56	8	39	51	49
7	7	43	34	7	38	66	56	8	9	53	48	8	40	54	52
7	8	53	42	7	39	66	56	8	10	54	49	8	41	28	27
7	9	34	27	7	40	54	46	8	11	66	60	8	42	30	29
7	10	54	43	7	41	41	35	8	12	34	31	8	43	62	60
7	11	30	24	7	42	62	53	8	13	46	42	8	44	34	33
7	12	30	24	7	43	42	36	8	14	47	43	8	45	37	36
7	13	51	41	7	44	57	49	8	15	24	22	8	46	39	38
7	14	51	41	7	45	43	37	8	16	49	45	8	47	42	41
7	15	41	23	7	46	51	44	8	17	38	35	8	48	46	45
7	16	57	46	7	47	37	32	8	18	51	47	8	49	49	48
7	17	42	34	7	48	30	26	8	19	66	61	8	50	54	53
7	18	37	30	7	49	38	33	8	20	54	50	8	51	59	58
7	19	59	48	7	50	54	47	8	21	57	53	8	52	66	65
7	20	54	44	7	51	47	41	8	22	43	40	8	53	....	....
7	21	49	40	7	52	24	21	8	23	58	54	8	54	....	....
7	22	66	54	7	53	24	21	8	24	30	28	8	55	....	....
7	23	39	32	7	54	49	43	8	25	62	58	8	56	....	....
7	24	62	51	7	55	58	51	8	26	47	44	8	57	....	....
7	25	57	47	7	56	59	52	8	27	49	46	8	58	....	....
7	26	46	38	7	57	43	38	8	28	34	32	8	59	....	....
7	27	58	48	7	58	43	38	8	29	53	50	9	0	1 Turn	

CHAPTER XIX

CHANGE GEARS FOR CUTTING SPIRALS

We have seen in the chapter on spiral gears how the lead of the spiral is calculated. We shall now see how the machine is arranged to produce a given lead.

The wormwheel in the Universal Dividing Head has 40 teeth and the worm is single threaded, therefore, 40 revolutions of the worm are required to make one revolution of the dividing head spindle. The table screw is so geared to the segment that the first change gear on this segment starting from the screw end makes one revolution for ¼″ table movement.

If equal change gears were used the wormshaft would also make one revolution for each ¼″ table travel, and as the worm has 40 teeth, the table would have to move 40 × ¼″ = 10″ for one full turn of the wormwheel and, therefore, for one turn of the spindle of the dividing head. In other words, a spiral of 10″ lead will be produced if we use even change gears. If we want less lead we must speed up the wormshaft, and for more lead we must slow it down. This we do by means of the change gears furnished with the driving mechanism of the dividing head.

If the lead is to be one-third of 10″ then we must speed up 3 to 1, and if the lead were three times 10″, then we would slow down one-third of the speed of the first change gear.

The Lead Divided by Ten is the Change Gear Ratio. For instance, to cut a spiral with a lead of 10½″, divide 10½ by 10. Writing this as a common fraction we find that the change gear ratio is $\frac{10.5}{10} = \frac{105}{100}$, or $\frac{21}{20}$. We would get this result by placing a 20-tooth pinion on the first segment stud and a 21-tooth gear on the wormshaft. As these gears would be too far apart we would place two equal idlers somewhere between the two gears so as to connect them. However, looking up our list of change gears we find that we have neither a 20 nor a 21-tooth gear. Nor do we have multiples of both. It is true we have a 40-tooth gear which is 2 times 20,

but we have no gear with 2 times 21 teeth. We must therefore try to select our gears in such a way that we can compound them. This we do by splitting the fraction $\frac{21}{20}$ into two other fractions whose product equals the original fraction. This might be done in different ways; for instance, $\frac{21}{20} = \frac{7 \times 3}{4 \times 5}$. We might now look for a pair of gears with a ratio of 7 to 4 and another pair with a ratio of 3 to 5; but, as we would like to have the gears as nearly of even size as we can get them, we multiply the numerator of the second fraction and the denominator of the first each by 2, which, of course, does not change the value of the product. We then get $\frac{7 \times 6}{8 \times 5}$. Multiplying both numerator and denominator of a fraction does not change its value. We may, therefore, make such a multiplication to raise the figures composing these fractions so they will correspond to the number of teeth in standard change gears furnished with the dividing head. Thus $\frac{7}{8} \times \frac{8}{8} = \frac{56}{64}$ and $\frac{6}{5} \times \frac{8}{8} = \frac{48}{40}$.

The original ratio is not changed in value when written $\frac{56 \times 48}{64 \times 40}$.

We saw above that if we had a 20 and a 21-tooth gear we could have placed the 21-tooth gear on the wormshaft and the 20-tooth on the first segment stud (called in the tables, gear for screw) and with two equal toothed idlers between to fill the space (which would not have affected the ratio) we could have proceeded to mill our spiral of 10½″ lead. In this case the 20-tooth gear would have been the driver and the 21-tooth the driven gear. In the case of our compound gears, therefore, 64 and 40 are the drivers and 56 and 48 are the driven gears.

We place 64 on the first segment stud (gear for screw) and let it drive 56 (2d intermediate) and 48 on the wormshaft and drive it by 40 (1st intermediate), all as shown in Fig. 266. From this example the following rules may be deduced.

1st. $\frac{\text{Lead}}{10}$ = Change gear ratio, that is

$$\frac{\text{Lead}}{10} = \frac{\text{Driven gears}}{\text{Driving gears}}$$

2d. Resolve this fraction into two fractions.

3d. Multiply the numerator and denominator of each fraction by some number (not necessarily the same number for both fractions) so as to get numbers corresponding to the number of teeth in standard change gears furnished with the machine. These numbers will then represent

$$\frac{\text{driven gears}}{\text{driving gears}} = \frac{\text{2d interm.} \times \text{gear on wormshaft}}{\text{1st interm.} \times \text{gear for screw}} = \frac{\text{lead}}{10}.$$

Application of Continued Fractions. The fraction $\frac{\text{lead}}{10}$ is not always by any means as simple a fraction as the ones used in the preceding cases to illustrate the principle involved in computing change gears. Suppose, for example, it is desired to determine the proper change gears for a lead of 9.643″. Our fraction now is $\frac{9.643}{10}$. Multiplying this by 1000 to get rid of the decimal, we have the fraction $\frac{9643}{10000}$. Proceeding now as in the last example given in Chapter XVIII on Continued Fractions, we get the following:

9643)10000(1
9643
357)9643(27
714
2503
2499
4)357(89
32
37
36
1)4(4
4
0

Omitting the last two quotients and placing the others in our diagram as before, we get

		27	1
0	1	27	28

and our approximately equivalent fraction is, therefore, $\frac{27}{28}$. Before we proceed further let us prove the accuracy of this fraction. We find by dividing 27 by 28 we get .96425. We must remember that our original fraction was $\frac{\text{lead}}{10}$, the value of which of course is one-tenth the lead. That is approximately what we get when we divide 27 by 28, as above. We must, therefore, multiply this result by ten in order to compare it with the original figure representing the lead. This gives us 9.6425, which subtracted from the actual lead, 9.643, shows a difference of .0005, entirely too small an amount to give us any concern. We may, therefore, proceed to split up our fraction $\frac{27}{28}$ so as to reduce it into fractions representing suitable change gears. Thus

$$\frac{27}{28} = \frac{3 \times 9}{4 \times 7}$$

$$\frac{3}{4} \times \frac{16}{16} = \frac{48}{64} \text{ and } \frac{9}{7} \times \frac{8}{8} = \frac{72}{56}$$

We therefore have $\frac{48 \times 72}{64 \times 56}$ in which 48 and 72 are the driven gears and 56 and 64 are the driving gears. We therefore proceed to place these on the machine as shown in Fig. 266, placing the 48-tooth gear on the second intermediate stud, the 72-tooth gear on the worm shaft, the 64-tooth gear on the first intermediate stud and the 56-tooth gear on the stud in the segment next to and running at the same speed as the screw.

In this connection it should be noted that it is permissible to transpose the 48-tooth gear and the 72-tooth gear and also the 56-tooth gear and the 64-tooth gear. This may make a more convenient combination to set up and does not affect the result at all.

Fig. 266 shows the Dividing Head as used on a High-Power Universal Miller, geared up for a right-hand spiral, 10½″ lead.

We make a variety of machines and spiral cutting heads, and since the use of the idler varies with different combinations of spiral heads and machines, the following tabulation will prove of assistance.*

Fig. 266

	No. 1 and No. 2 Cone-Driven Machines		All High-Power Design Machines	
	Right-Hand Spiral	Left-Hand Spiral	Right-Hand Spiral	Left-Hand Spiral
Dividing Head	Do not use Idler	Use Idler	Use Idler	Do not use Idler
12″ or 16″ Spir. Head	Use Idler	Do not use Idler	Do not use Idler	Use Idler

The table of leads on pages 338 and 339 gives a selected number of leads with corresponding combinations of change gears, angles, etc., for spirals up to 6″ diameter and angles up to 45°.

The table on pages 340 to 344 gives a complete list of leads up to 80″, that can be obtained with the change gears regularly supplied without interference when they are placed on the machine. This will be found of great convenience, as the proper combination for almost any desired spiral can be taken from this table.

For example: We want the proper gearing for a spiral of 21.1″ lead. Consulting the table we find a lead of 21.116″, and since this is only .016″ longer than the theoretically correct lead, this gear combination can be used for all ordinary work.

*Always withdraw the index plate stop before starting to cut spirals, because the index plate must be free to revolve with the index pointer. After the head has been geared up the table should always be moved by hand to insure that all parts are free to move, before throwing in the power feed. The Dividing Head should be placed in that slot of the table which is directly over the lead screw.

Leads, Change Gears and Angles for Milling Twist Drills

These tables are used in connection with standard cutters for milling twist drills.

Diameter of Drill	Pitch in Inches	Gear on Worm	1st Intermediate Gear	2d Intermediate Gear	Gear for Screw	Angle of Spiral
3/16	1.67	24	64	32	72	19° 27′
1/4	1.94	28	64	32	72	21°
1/16	2.92	28	64	48	72	20°
3/8	3.24	28	48	40	72	21°
7/16	3.89	32	64	56	72	20° 10′
1/2	4.17	40	64	48	72	20° 30′
9/16	4.86	40	64	56	72	20°
5/8	5.33	32	40	48	72	20° 12′
11/16	6.12	56	40	28	64	19° 30′
3/4	6.48	40	48	56	72	20°
13/16	7.29	56	64	40	48	19° 20′
7/8	7.62	48	56	64	72	19° 50′
15/16	8.33	48	32	40	72	19° 30′
1	8.95	86	56	28	48	19° 20′
1 1/8	9.33	48	40	56	72	20° 40′

Twist drills are milled with the center part increasing in thickness toward the shank end. For different size drills this thickness varies as shown in table below.

1/4″ drill is 3/64″ thick at the point, and 3/32″ thick in the back.
1/2″ drill is 1/16″ thick at the point, and 5/32″ thick in the back.
3/4″ drill is 3/32″ thick at the point, and 1/16″ thick in the back.
1″ drill is 3/64″ thick at the point, and 1/4″ thick in the back.
1 1/8″ drill is 1/8″ thick at the point, and 5/32″ thick in the back.

Other size drills vary in about the same proportion.

Table of Change Gears, Approximate Angles and Leads for Cutting Spirals

Twelve Change Gears are furnished with each Universal Miller as follows: 24, 24, 28, 32, 40, 44, 48, 56, 64, 72, 86 and 100 teeth.

Lead of Spiral, Inches	Gear on Worm	1st Intermediate Gear	2d Intermediate Gear	Gear for Screw	1st Intermediate Gear Drives the Gear on Worm. 2d Intermediate Gear drives the Gear for Screw. DIAMETER OF WORK																								
					$\frac{1}{8}$ In.	$\frac{1}{4}$ In	$\frac{3}{8}$ In.	$\frac{1}{2}$ In.	$\frac{5}{8}$ In.	$\frac{3}{4}$ In.	$\frac{7}{8}$ In.	1 In.	$1\frac{1}{4}$ In.	$1\frac{1}{2}$ In.	$1\frac{3}{4}$ In.	2 In.	$2\frac{1}{4}$ In.	$2\frac{1}{2}$ In.	$2\frac{3}{4}$ In.	3 In.	$3\frac{1}{4}$ In.	$3\frac{1}{2}$ In.	$3\frac{3}{4}$ In.	4 In.	$4\frac{1}{2}$ In	5 In.	$5\frac{1}{2}$ In.	6 In.
	Driven	Driver	Driven	Driver																									
.67	24	86	24	100	$30\frac{1}{4}$																								
.78	24	86	28	100	26	$44\frac{1}{2}$																							
.89	24	86	32	100	$23\frac{1}{2}$	41																							
1.12	24	86	40	100	19	$34\frac{1}{2}$																							
1.34	24	86	48	100	16	$30\frac{1}{4}$	$41\frac{1}{2}$																						
1.46	24	64	28	72	$14\frac{3}{4}$	28	$38\frac{1}{2}$																						
1.56	28	86	48	100	$13\frac{3}{4}$	$26\frac{1}{2}$	37																						
1.67	24	64	32	72	$12\frac{3}{4}$	25	$34\frac{3}{4}$	$43\frac{1}{4}$																					
1.94	28	64	32	72	$11\frac{1}{4}$	$21\frac{3}{4}$	31	39	45																				
2.08	24	64	40	72	$10\frac{1}{4}$	$20\frac{1}{2}$	$29\frac{1}{2}$	37	$43\frac{1}{4}$																				
2.22	32	56	28	72	$9\frac{3}{4}$	$19\frac{1}{4}$	$27\frac{1}{2}$	35	$41\frac{1}{4}$																				
2.50	24	64	48	72	$8\frac{3}{4}$	17	25	32	38	$43\frac{1}{4}$																			
2.78	32	64	40	72	8	$15\frac{1}{2}$	23	$29\frac{1}{2}$	$35\frac{1}{4}$	$40\frac{1}{2}$	$44\frac{3}{4}$																		
2.92	32	56	44	86	$7\frac{1}{2}$	15	$21\frac{3}{4}$	$28\frac{1}{4}$	34	39	$43\frac{1}{4}$																		
3.24	28	48	40	72	$6\frac{3}{4}$	$13\frac{1}{4}$	$19\frac{3}{4}$	$25\frac{3}{4}$	$31\frac{1}{4}$	36	$40\frac{1}{2}$	$44\frac{1}{4}$																	
3.70	32	48	40	72	6	$11\frac{3}{4}$	$17\frac{1}{2}$	23	28	$32\frac{1}{2}$	$36\frac{1}{2}$	$40\frac{1}{2}$																	
3.89	32	64	56	72	$5\frac{1}{2}$	$11\frac{1}{4}$	$16\frac{1}{2}$	22	$26\frac{3}{4}$	$31\frac{1}{4}$	$35\frac{1}{4}$	39																	
4.17	40	64	48	72	$5\frac{1}{4}$	$10\frac{1}{2}$	$15\frac{3}{4}$	$20\frac{1}{2}$	$25\frac{1}{4}$	$29\frac{1}{2}$	$33\frac{1}{2}$	37	$43\frac{1}{4}$																
4.46	32	40	48	86	$4\frac{3}{4}$	$9\frac{3}{4}$	$14\frac{3}{4}$	$19\frac{1}{4}$	$23\frac{3}{4}$	$27\frac{3}{4}$	$31\frac{1}{2}$	35	$41\frac{1}{2}$																
4.86	40	64	56	72	$4\frac{1}{2}$	9	$13\frac{1}{2}$	$17\frac{3}{4}$	22	$25\frac{3}{4}$	$29\frac{1}{2}$	33	39	$44\frac{1}{4}$															
5.33	32	40	48	72	4	$8\frac{1}{4}$	$12\frac{1}{4}$	$16\frac{1}{2}$	$20\frac{1}{4}$	$23\frac{3}{4}$	$27\frac{1}{4}$	$30\frac{1}{2}$	$36\frac{1}{2}$	$41\frac{1}{2}$															
5.44	56	40	28	72	4	8	12	16	20	$23\frac{1}{2}$	$26\frac{3}{4}$	30	36	41															
6.12	56	40	28	64	$3\frac{1}{2}$	$7\frac{1}{4}$	11	$14\frac{1}{2}$	$17\frac{3}{4}$	21	$24\frac{1}{4}$	27	33	$37\frac{3}{4}$	42														
6.22	64	40	28	72	$3\frac{1}{2}$	7	$10\frac{3}{4}$	$14\frac{1}{4}$	$17\frac{1}{2}$	$20\frac{3}{4}$	$23\frac{3}{4}$	$26\frac{3}{4}$	$32\frac{1}{2}$	$37\frac{1}{4}$	$41\frac{1}{2}$														
6.48	40	48	56	72	$3\frac{1}{4}$	$6\frac{3}{4}$	$10\frac{1}{4}$	$13\frac{1}{2}$	$16\frac{3}{4}$	20	23	$25\frac{3}{4}$	$31\frac{1}{2}$	$36\frac{1}{4}$	$40\frac{1}{4}$	$44\frac{1}{2}$													
6.67	64	56	28	48	$3\frac{1}{4}$	$6\frac{1}{2}$	10	$13\frac{1}{4}$	$16\frac{1}{2}$	$19\frac{1}{2}$	$22\frac{1}{2}$	$25\frac{1}{4}$	$30\frac{3}{4}$	$35\frac{1}{4}$	$39\frac{1}{2}$	$43\frac{1}{2}$													
7.29	56	64	40	48	3	$6\frac{1}{4}$	$9\frac{1}{4}$	$12\frac{1}{4}$	15	18	$20\frac{1}{4}$	$23\frac{1}{2}$	$28\frac{1}{2}$	33	37	41	$44\frac{1}{2}$												
7.41	40	48	64	72	3	6	9	12	$14\frac{3}{4}$	$17\frac{3}{4}$	$20\frac{1}{4}$	$22\frac{3}{4}$	$28\frac{1}{2}$	$32\frac{1}{2}$	$36\frac{1}{4}$	$40\frac{1}{4}$	$43\frac{3}{4}$												

Approximate Angle in Degrees for Setting Milling Machine Table.

These tables are of especial convenience for quickly setting the machine with proper change gears when the angle of spiral and the diameter of a piece of work are known. For example: To cut a spiral mill 4″ diameter, 25° angle: Follow down the 4″ column to the nearest angle, $25\frac{1}{4}$, and the change gears are 64, 28, 56 and 48.

$$\frac{\text{Lead}}{10} = \frac{\text{Driven}}{\text{Drivers}} = \frac{\text{2d} \times \text{Worm}}{\text{1st} \times \text{Screw}}$$

7.62	48	56	64	72	2¾	5¾	8¾	11½	14½	17¼	19¾	22¼	27½	32	36	39½	43											
8.33	48	32	40	72	2½	5¼	8	10½	13¼	15¾	18¼	20½	25½	29½	33½	37	40½	43½										
8.95	86	48	28	56	2½	5	7½	10	12½	14¾	17	19¼	24	28	31¾	35¼	38½	41¼	44									
9.33	48	40	56	72	2¼	4¾	7¼	9½	11¾	14	16¼	18½	23	27	30½	34	37½	40¼	43									
9.52	64	56	40	48	2¼	4½	7	9¼	11½	13¾	16	18¼	22½	26½	30	33½	36½	39½	42¼	45								
10.29	72	40	32	56	2	4¼	6½	8¾	10¾	12¾	15	17¼	21	24¾	28¼	31½	34½	37½	40	42½	45							
10.37	56	48	64	72	2	4¼	6½	8½	10½	12¾	14¾	17	20¾	24½	28	31¼	34¼	37¼	39¾	42¼	44¾							
10.50	56	64	48	40	2	4¼	6¼	8½	10½	12½	14½	16¾	20½	24¼	27¾	31	34	36¾	39½	42	44¼							
10.67	48	40	64	72	2	4	6¼	8¼	10¼	12¼	14¼	16½	20¼	24	27¼	30½	33½	36½	39	41½	43¾							
10.94	56	32	40	64	2	4	6	8¼	10¼	12	14	16¼	20	23½	26¾	30	33	35¾	38¼	43¾	43							
11.11	64	32	40	72	2	4	6	8	10	11¾	13¾	16	19¾	23	26½	29½	32½	35¼	38	40¼	42½	44¾						
11.66	56	32	48	72	1¾	3¾	5¾	7½	9½	11¼	13¼	15¾	18¾	22	25¼	28½	31¼	34	36½	39	41¼	45½						
12.00	72	40	32	48	1¾	3¾	5½	7¼	9¼	11	12¾	15	18¼	21½	24¾	27¾	30½	33¼	35¾	38	40¼	42½	44¾					
13.12	56	32	48	64	1½	3½	5¼	6¾	8½	10¼	11¾	13½	16¾	20	22¾	25¾	28¼	31	33¼	35¾	37¾	40	42	43¾				
13.33	64	32	48	72	1½	3¼	5	6½	8¼	10	11½	13¼	16½	19½	22½	25½	28	30½	33	35¼	37½	39½	41½	43¼	46¾	49¼	52¼	
13.71	64	56	48	40	1½	3¼	4¾	6½	8	9¾	11¼	13	16	19	22	24¾	27¼	30	32¼	34½	36½	38¾	40¾	42½	45¾	49	51½	
15.24	64	28	48	72	1½	3	4½	5¾	7¼	8¾	10¼	11¾	14½	17¼	20	22½	25	27¼	29½	31¾	34	35¾	37¾	39½	42¾	46	48½	51
15.56	64	32	56	72	1¼	2¾	4¼	5¾	7¼	8¾	10	11½	14¼	17	19½	22	24½	27	29	31¼	33¼	35¼	37	39	42¼	45¼	48	50½
15.75	72	64	56	40	1¼	2¾	4¼	5½	7	8½	9¾	11¼	14	16¾	19¼	21¾	24¼	26½	28¾	31	33	35	36¾	38½	42	45	47½	50
16.87	72	32	48	64	1¼	2½	4	5¼	6¾	7¾	9¼	10½	13¼	15¾	18¼	20½	22¾	25	27	29¼	31¼	33¼	35	36½	39¾	43	45¾	48¼
17.14	72	56	64	48	1¼	2½	4	5¼	6½	7¾	9	10¼	13	15½	17¾	20¼	22¼	24¾	26¾	29	30¾	32¾	34½	36	39½	42½	45¼	47¾
18.75	72	32	40	48	1	2¼	3½	4¾	6	7¼	8¼	9½	12	14¼	16¼	18½	20¾	22¾	25	26¾	28½	30¼	32	33¾	37	39¾	42¾	45
19.29	72	32	48	56	1	2¼	3½	4½	5¾	7	8	9¼	11½	13¾	16	18¼	20¼	22¼	24	26	28	29¾	31½	33	36¼	38¾	42	44½
19.59	64	28	48	56	1	2¼	3¼	4½	5¾	6¾	8	9¼	11½	13½	15¾	18	20	22	23¾	25¾	27½	29¼	31	32¾	35½	38¾	41½	44
19.69	72	32	56	64	1	2¼	3¼	4½	5¾	6¾	8	9	11½	13½	15¾	17¾	20	21¾	23¾	25½	27½	29¼	31	32½	35¾	38½	41¼	43¾
21.43	72	28	40	48	1	2	3¼	4¼	5¼	6¼	7½	8½	10½	12½	14½	16½	18½	20¼	22	23¾	25½	27¼	29	30¼	33½	36¼	38¾	41¼
22.50	72	28	56	64	1	2	3	4	5	6	7	8	10	12	13¾	15¾	17½	19¼	21	22¾	24½	27	27¾	29¼	32¼	35	37½	40
23.33	64	48	56	32	1	2	3	4	5	5¾	6¾	7¾	9¾	11½	13¼	15¼	17	18¾	20¼	22	23½	25¼	27	28¼	31¼	34	36¾	39
26.25	72	48	56	32	1	1¾	2¾	3½	4¼	5	6	7	8½	10¼	12	13½	15	16¾	18¼	19¾	21¼	22¾	24¼	25½	28¼	31	33¼	35¾
26.67	64	28	56	48	¾	1¾	2¾	3½	4¼	5	6	6¾	8½	10	11¾	13¼	14¾	16½	18	19½	21	22¼	23¾	25¼	28	30½	31¼	35¼
28.00	64	40	56	32	¾	1¾	2½	3¼	4	4¾	5¾	6½	8	9½	11¼	12¾	14¼	15¾	17¼	18¾	20	21½	22¾	24	26¾	29¼	31¾	34
30.86	72	28	48	40	¾	1½	2¼	3	3¾	4½	5	5¾	7¼	8¾	10	11½	13	14¼	15½	17	18½	19½	21	22	26	27	29¼	31½
31.50	72	40	56	32	¾	1½	2¼	3	3½	4¼	5	5¾	7¼	8½	10	11¼	12¾	14	15¼	16½	18	19¼	20½	21¾	24¼	26½	28¾	31
36.00	72	40	64	32	½	1¼	2	2½	3¼	3¾	4½	5	6¼	7½	8¾	10	11	12¼	13½	14¾	16	17	18¼	19¼	21½	23½	25¾	27¾
41.14	72	28	64	40	½	1	1¾	2¼	2¾	3¼	4	4½	5½	6½	7¾	8¾	9¾	10¾	11¾	13	14	15	16	17	19	21	22¾	24½
45.00	72	28	56	32	½	1	1½	2	2½	3	3½	4	5	6	7	8	9	10	11	11¾	12¾	13¾	14¾	15½	17½	19¼	21	22¾
48.00	72	24	64	40	½	1	1½	2	2½	3	3¼	3¾	4¾	5½	6½	7½	8½	9¼	10¼	11¼	12	13	13¾	14½	16½	18	19¾	21½
51.43	72	28	64	32	½	¾	1½	1¾	2¼	2¾	3	3½	4½	5¼	6	7	7¾	8¾	9½	10½	11¼	12	12¾	13¾	14¾	17	18½	20
60.00	72	24	64	32	½	¾	1¼	1½	2	2¼	2½	3	3¾	4½	5¼	6	6¾	7½	8¼	9	9½	10¼	11	11¾	13¼	14¾	16	17½

Leads from .670″ to 3.143″

$$\frac{\text{Lead}}{10} = \frac{\text{Driven}}{\text{Drivers}} = \frac{\text{2d x Worm}}{\text{1st x Screw}}$$

Lead of Spiral in Inches	Gear on Worm (Driven)	1st Intermediate Gear (Driver)	2d Intermediate Gear (Driven)	Gear for Screw (Driver)	Lead of Spiral in Inches	Gear on Worm (Driven)	1st Intermediate Gear (Driver)	2d Intermediate Gear (Driven)	Gear for Screw (Driver)	Lead of Spiral in Inches	Gear on Worm (Driven)	1st Intermediate Gear (Driver)	2d Intermediate Gear (Driven)	Gear for Screw (Driver)
.670	24	86	24	100	1.714	40	56	24	100	2.442	28	64	48	86
.781	24	86	28	100	1.744	24	64	40	86	2.444	40	72	44	100
.800	24	72	24	100	1.750	28	64	40	100	2.450	56	64	28	100
.893	24	86	32	100	1.778	32	72	40	100	2.456	44	86	48	100
.900	24	64	24	100	1.786	32	86	48	100	2.481	32	72	48	86
.930	24	72	24	86	1.809	28	72	40	86	2.489	32	100	56	72
.933	24	72	28	100	1.823	28	100	56	86	2.500	24	64	48	72
1.029	24	56	24	100	1.860	24	72	48	86	2.514	44	56	32	100
1.042	28	86	32	100	1.867	28	72	48	100	2.532	28	72	56	86
1.047	24	64	24	86	1.886	44	56	24	100	2.537	24	44	40	86
1.050	24	64	28	100	1.919	24	64	44	86	2.558	32	64	44	86
1.067	24	72	32	100	1.925	28	64	44	100	2.567	44	48	28	100
1.085	24	72	28	86	1.944	28	64	32	72	2.605	28	40	32	86
1.116	24	86	40	100	1.956	32	72	44	100	2.619	24	56	44	72
1.196	24	56	24	86	1.990	28	72	44	86	2.658	32	56	40	86
1.200	24	64	32	100	1.993	24	56	40	86	2.667	40	72	48	100
1.221	24	64	28	86	2.000	32	64	40	100	2.674	28	64	44	72
1.228	24	86	44	100	2.030	24	44	32	86	2.713	28	48	40	86
1.240	24	72	32	86	2.035	28	64	40	86	2.743	48	56	32	100
1.244	28	72	32	100	2.047	40	86	44	100	2.750	40	64	44	100
1.302	28	86	40	100	2.057	48	56	24	100	2.778	32	64	40	72
1.333	24	72	40	100	2.067	32	72	40	86	2.791	32	64	48	86
1.340	24	86	48	100	2.083	24	64	40	72	2.800	56	64	32	100
1.371	32	56	24	100	2.093	24	64	48	86	2.842	40	72	44	86
1.395	24	64	32	86	2.100	28	64	48	100	2.849	28	64	56	86
1.400	28	64	32	100	2.133	32	72	48	100	2.857	24	56	48	72
1.433	28	86	44	100	2.171	28	72	48	86	2.865	44	100	56	86
1.447	28	72	32	86	2.178	28	100	56	72	2.880	48	40	24	100
1.458	24	64	28	72	2.182	40	44	24	100	2.894	32	72	56	86
1.467	24	72	44	100	2.193	24	56	44	86	2.917	28	64	48	72
1.488	32	86	40	100	2.200	32	64	44	100	2.924	32	56	44	86
1.500	40	64	24	100	2.222	28	56	32	72	2.933	44	72	48	100
1.550	24	72	40	86	2.233	40	86	48	100	2.946	44	56	24	64
1.556	28	72	40	100	2.238	28	64	44	86	2.960	28	44	40	86
1.563	28	86	48	100	2.274	32	72	44	86	2.984	28	48	44	86
1.595	24	56	32	86	2.286	32	56	40	100	3.000	40	64	48	100
1.600	24	72	48	100	2.292	24	64	44	72	3.044	24	44	48	86
1.628	28	64	32	86	2.326	32	64	40	86	3.056	32	64	44	72
1.637	32	86	44	100	2.368	28	44	32	86	3.070	24	40	44	86
1.650	44	64	24	100	2.381	24	56	40	72	3.101	40	72	48	86
1.667	24	64	32	72	2.392	24	56	48	86	3.111	40	100	56	72
1.705	24	72	44	86	2.400	32	64	48	100	3.126	48	100	56	86
1.711	28	72	44	100	2.431	28	64	40	72	3.143	40	56	44	100

Leads from 3.175″ to 6.667″

$$\frac{\text{Lead}}{10} = \frac{\text{Driven}}{\text{Drivers}} = \frac{\text{2d x Worm}}{\text{1st x Screw}}$$

Lead of Spiral in Inches	Gear on Worm (Driven)	1st Intermediate Gear (Driver)	2d Intermediate Gear (Driven)	Gear for Screw (Driver)	Lead of Spiral in Inches	Gear on Worm (Driven)	1st Intermediate Gear (Driver)	2d Intermediate Gear (Driven)	Gear for Screw (Driver)	Lead of Spiral in Inches	Gear on Worm (Driven)	1st Intermediate Gear (Driver)	2d Intermediate Gear (Driven)	Gear for Screw (Driver)
3.175	32	56	40	72	4.040	32	44	40	72	5.185	32	48	56	72
3.189	32	56	48	86	4.059	32	44	48	86	5.209	56	40	32	86
3.198	40	64	44	86	4.070	40	64	56	86	5.226	86	64	28	72
3.241	28	48	40	72	4.074	32	48	44	72	5.238	44	56	48	72
3.256	32	64	56	86	4.093	32	40	44	86	5.316	40	56	64	86
3.267	56	48	28	100	4.134	40	72	64	86	5.333	32	40	48	72
3.300	44	64	48	100	4.144	56	44	28	86	5.347	44	64	56	72
3.307	32	72	64	86	4.167	40	64	48	72	5.357	48	64	40	56
3.333	32	64	48	72	4.200	48	100	56	64	5.412	64	44	32	86
3.349	24	40	48	86	4.242	28	44	48	72	5.426	40	48	56	86
3.360	48	40	28	100	4.252	32	56	64	86	5.444	56	40	28	72
3.383	32	44	40	86	4.264	40	48	44	86	5.568	56	44	28	64
3.403	28	64	56	72	4.286	48	64	32	56	5.625	72	48	24	64
3.411	44	72	48	86	4.341	48	72	56	86	5.657	32	44	56	72
3.422	44	100	56	72	4.364	48	44	40	100	5.714	64	48	24	56
3.429	40	56	48	100	4.365	40	56	44	72	5.759	86	56	24	64
3.488	40	64	48	86	4.375	56	48	24	64	5.788	56	72	64	86
3.492	32	56	44	72	4.385	44	56	48	86	5.833	48	64	56	72
3.500	40	100	56	64	4.444	28	56	64	72	5.847	44	56	64	86
3.520	44	40	32	100	4.465	32	40	48	86	5.893	48	64	44	56
3.551	28	44	48	86	4.477	44	64	56	86	5.920	40	44	56	86
3.565	28	48	44	72	4.480	56	40	32	100	5.926	64	48	32	72
3.581	28	40	44	86	4.537	28	48	56	72	5.954	64	40	32	86
3.618	40	72	56	86	4.548	44	72	64	86	5.969	44	48	56	86
3.636	24	44	48	72	4.558	56	40	28	86	5.972	86	48	24	72
3.654	40	56	44	86	4.583	44	64	48	72	6.061	40	44	48	72
3.667	44	48	40	100	4.667	28	40	48	72	6.109	56	44	48	100
3.704	32	48	40	72	4.736	32	44	56	86	6.125	56	40	28	64
3.721	28	56	64	86	4.762	40	56	48	72	6.136	72	44	24	64
3.733	48	100	56	72	4.773	56	44	24	64	6.140	44	40	48	86
3.750	48	64	28	56	4.821	72	56	24	64	6.160	56	40	44	100
3.771	44	56	48	100	4.848	32	44	48	72	6.202	40	48	64	86
3.798	28	48	56	86	4.861	40	64	56	72	6.222	64	40	28	72
3.810	32	56	48	72	4.884	48	64	56	86	6.234	64	44	24	56
3.819	40	64	44	72	4.889	32	40	44	72	6.349	40	56	64	72
3.837	44	64	48	86	4.949	56	44	28	72	6.364	56	44	32	64
3.840	48	40	32	100	4.961	48	72	64	86	6.379	48	56	64	86
3.850	44	100	56	64	5.074	40	44	48	86	6.429	72	56	32	64
3.889	32	64	56	72	5.080	32	56	64	72	6.465	64	44	32	72
3.907	28	40	48	86	5.093	40	48	44	72	6.481	40	48	56	72
3.920	56	40	28	100	5.104	56	48	28	64	6.515	86	44	24	72
3.979	44	72	56	86	5.119	86	56	24	72	6.563	72	48	28	64
3.986	40	56	48	86	5.133	56	48	44	100	6.667	64	56	28	48

Leads from 6.720″ to 12.444″

$$\frac{\text{Lead}}{10} = \frac{\text{Driven}}{\text{Drivers}} = \frac{\text{2d x Worm}}{\text{1st x Screw}}$$

Lead of Spiral in Inches	Gear on Worm (Driven)	1st Intermediate Gear (Driver)	2d Intermediate Gear (Driven)	Gear for Screw (Driver)	Lead of Spiral in Inches	Gear on Worm (Driven)	1st Intermediate Gear (Driver)	2d Intermediate Gear (Driven)	Gear for Screw (Driver)	Lead of Spiral in Inches	Gear on Worm (Driven)	1st Intermediate Gear (Driver)	2d Intermediate Gear (Driven)	Gear for Screw (Driver)
6.720	56	40	48	100	8.212	86	64	44	72	10.238	86	56	48	72
6.750	72	40	24	64	8.250	48	64	44	40	10.286	72	40	32	56
6.765	40	44	64	86	8.312	64	56	32	44	10.313	72	64	44	48
6.806	56	32	28	72	8.333	48	32	40	72	10.370	56	48	64	72
6.822	44	48	64	86	8.361	86	40	28	72	10.390	64	56	40	44
6.825	86	56	32	72	8.377	86	44	24	56	10.419	56	40	64	86
6.968	86	48	28	72	8.485	48	44	56	72	10.451	86	64	56	72
6.984	44	56	64	72	8.532	86	56	40	72	10.476	64	56	44	48
7.000	56	40	32	64	8.551	86	44	28	64	10.500	56	64	48	40
7.013	72	44	24	56	8.555	44	40	56	72	10.558	86	64	44	56
7.071	40	44	56	72	8.571	72	56	32	48	10.667	48	40	64	72
7.104	48	44	56	86	8.682	64	48	56	86	10.694	56	32	44	72
7.111	64	40	32	72	8.687	86	44	32	72	10.714	72	56	40	48
7.130	44	48	56	72	8.839	72	64	44	56	10.750	86	40	32	64
7.159	72	44	28	64	8.889	56	28	32	72	10.859	86	44	40	72
7.163	44	40	56	86	8.930	48	40	64	86	10.909	72	48	32	44
7.167	86	40	24	72	8.958	86	56	28	48	10.938	56	32	40	64
7.273	64	44	28	56	9.000	72	40	28	56	10.949	86	48	44	72
7.292	56	64	40	48	9.143	64	40	32	56	11.111	64	32	40	72
7.330	86	44	24	64	9.166	48	32	44	72	11.168	86	44	32	56
7.333	44	40	48	72	9.214	86	40	24	56	11.169	72	48	64	86
7.407	40	48	64	72	9.333	48	40	56	72	11.198	86	64	40	48
7.465	86	64	40	72	9.351	72	56	32	44	11.250	72	32	28	56
7.500	72	48	32	64	9.375	72	64	40	48	11.313	56	44	64	72
7.601	86	44	28	72	9.385	86	56	44	72	11.402	86	44	28	48
7.619	48	56	64	72	9.406	86	40	28	64	11.518	86	64	48	56
7.679	86	64	32	56	9.429	48	56	44	40	11.667	56	32	48	72
7.714	72	40	24	56	9.471	56	44	64	86	11.688	72	56	40	44
7.778	64	32	28	72	9.524	64	56	40	48	11.758	86	32	28	64
7.814	48	40	56	86	9.545	72	48	28	44	11.786	72	56	44	48
7.839	86	48	28	64	9.556	86	40	32	72	11.852	64	24	32	72
7.875	72	40	28	64	9.568	72	56	64	86	12.000	72	40	32	48
7.955	56	64	40	44	9.598	86	64	40	56	12.031	56	32	44	64
7.963	86	48	32	72	9.625	56	64	44	40	12.040	86	56	64	72
8.000	64	40	28	56	9.643	72	64	48	56	12.121	64	48	40	44
8.021	56	64	44	48	9.697	64	48	32	44	12.178	72	44	64	86
8.036	72	64	40	56	9.722	56	32	40	72	12.216	86	64	40	44
8.063	86	40	24	64	9.773	86	44	32	64	12.222	48	24	44	72
8.081	40	44	64	72	9.778	44	40	64	72	12.273	72	64	48	44
8.118	48	44	64	86	9.844	72	32	28	64	12.286	86	40	32	56
8.148	44	48	64	72	9.954	86	48	40	72	12.318	86	64	44	48
8.182	72	44	28	56	10.159	64	28	32	72	12.375	72	40	44	64
8.186	44	40	64	86	10.227	72	64	40	44	12.444	56	40	64	72

Leads from 12.468″ to 24.635″

$$\frac{\text{Lead}}{10} = \frac{\text{Driven}}{\text{Drivers}} = \frac{\text{2d x Worm}}{\text{1st x Screw}}$$

Lead of Spiral in Inches	Gear on Worm (Driven)	1st Intermediate Gear (Driver)	2d Intermediate Gear (Driven)	Gear for Screw (Driver)	Lead of Spiral in Inches	Gear on Worm (Driven)	1st Intermediate Gear (Driver)	2d Intermediate Gear (Driven)	Gear for Screw (Driver)	Lead of Spiral in Inches	Gear on Worm (Driven)	1st Intermediate Gear (Driver)	2d Intermediate Gear (Driven)	Gear for Screw (Driver)
12.468	64	56	48	44	15.429	72	56	48	40	19.196	86	32	40	56
12.500	56	28	40	64	15.469	72	32	44	64	19.286	72	32	48	56
12.542	86	40	28	48	15.556	64	32	56	72	19.592	64	28	48	56
12.571	64	56	44	40	15.636	86	40	32	44	19.636	72	44	48	40
12.698	64	28	40	72	15.677	86	64	56	48	19.688	72	32	56	64
12.798	86	56	40	48	15.714	64	32	44	56	19.708	86	48	44	40
12.833	56	48	44	40	15.750	72	64	56	40	19.907	86	24	40	72
12.857	72	28	32	64	15.926	86	48	64	72	20.156	86	64	72	48
12.963	56	24	40	72	16.071	72	32	40	56	20.204	72	28	44	56
13.030	86	48	32	44	16.125	86	64	48	40	20.364	64	44	56	40
13.091	72	40	32	44	16.288	86	48	40	44	20.455	72	32	40	44
13.125	56	32	48	64	16.296	64	24	44	72	20.476	86	56	64	48
13.139	86	40	44	72	16.424	86	32	44	72	20.571	72	56	64	40
13.333	64	32	48	72	16.500	72	48	44	40	20.625	72	48	44	32
13.395	72	40	64	86	16.722	86	40	56	72	20.741	64	24	56	72
13.438	86	32	28	56	16.753	86	56	48	44	20.903	86	32	56	72
13.500	72	64	48	40	16.797	86	32	40	64	20.952	64	24	44	56
13.636	72	48	40	44	16.875	72	32	48	64	21.000	72	48	56	40
13.651	86	28	32	72	16.893	86	56	44	40	21.116	86	32	44	56
13.714	64	56	48	40	16.970	64	48	56	44	21.429	72	28	40	48
13.750	56	28	44	64	17.063	86	28	40	72	21.818	72	48	64	44
13.935	86	24	28	72	17.102	86	64	56	44	21.939	86	28	40	56
13.961	86	56	40	44	17.143	72	56	64	48	21.989	86	64	72	44
13.968	64	28	44	72	17.277	86	64	72	56	22.041	72	28	48	56
14.026	72	56	48	44	17.374	86	44	64	72	22.338	86	56	64	44
14.063	72	32	40	64	17.455	64	44	48	40	22.396	86	32	40	48
14.077	86	56	44	48	17.500	56	24	48	64	22.500	72	28	56	64
14.143	72	56	44	40	17.551	86	28	32	56	22.803	86	48	56	44
14.259	56	24	44	72	17.679	72	56	44	32	22.857	64	24	48	56
14.286	64	32	40	56	17.777	64	28	56	72	22.909	72	44	56	40
14.318	72	64	56	44	17.917	86	32	48	72	23.036	86	56	72	48
14.333	86	40	48	72	17.959	64	28	44	56	23.333	64	48	56	32
14.659	86	64	48	44	18.333	64	48	44	32	23.455	86	44	48	40
14.667	64	48	44	40	18.367	72	28	40	56	23.516	86	64	56	32
14.694	72	28	32	56	18.429	86	56	48	40	23.571	72	28	44	48
14.781	86	64	44	40	18.477	86	32	44	64	23.889	86	32	64	72
14.815	64	24	40	72	18.667	64	48	56	40	24.000	72	48	64	40
14.931	86	32	40	72	18.701	72	56	64	44	24.133	86	28	44	56
15.000	56	28	48	64	18.750	72	32	40	48	24.188	86	64	72	40
15.202	86	44	56	72	18.770	86	28	44	72	24.432	86	32	40	44
15.238	64	28	48	72	18.813	86	64	56	40	24.545	72	44	48	32
15.273	56	44	48	40	19.091	72	48	56	44	24.571	86	56	64	40
15.357	86	28	32	64	19.111	86	40	64	72	24.635	86	48	44	32

Leads from 24.750″ to 80.625″

$$\frac{\text{Lead}}{10} = \frac{\text{Driven}}{\text{Drivers}} = \frac{\text{2d x Worm}}{\text{1st x Screw}}$$

Lead of Spiral in Inches	Gear on Worm (Driven)	1st Intermediate Gear (Driver)	2d Intermediate Gear (Driven)	Gear for Screw (Driver)	Lead of Spiral in Inches	Gear on Worm (Driven)	1st Intermediate Gear (Driver)	2d Intermediate Gear (Driven)	Gear for Screw (Driver)	Lead of Spiral in Inches	Gear on Worm (Driven)	1st Intermediate Gear (Driver)	2d Intermediate Gear (Driven)	Gear for Screw (Driver)
24.750	72	40	44	32	30.857	72	28	48	40	40.952	86	28	64	48
25.083	86	48	56	40	31.111	64	24	56	48	41.143	72	28	64	40
25.130	86	56	72	44	31.273	86	44	64	40	41.806	86	24	56	48
25.455	64	44	56	32	31.354	86	48	56	32	42.232	86	28	44	32
25.595	86	28	40	48	31.500	72	40	56	32	43.000	86	40	64	32
25.714	72	56	64	32	31.852	86	24	64	72	43.636	72	24	64	44
26.061	86	48	64	44	32.000	64	28	56	40	43.977	86	44	72	32
26.182	72	44	64	40	32.250	86	48	72	40	44.675	86	28	64	44
26.250	72	48	56	32	32.576	86	24	40	44	45.000	72	28	56	32
26.327	86	28	48	56	32.727	72	44	64	32	45.606	86	24	56	44
26.667	64	28	56	48	32.847	86	24	44	48	46.071	86	28	72	48
26.875	86	28	56	64	33.507	86	28	48	44	47.778	86	24	64	48
27.000	72	40	48	32	33.786	86	28	44	40	48.000	72	24	64	40
27.302	86	28	64	72	33.939	64	24	56	44	48.375	86	40	72	32
27.364	86	44	56	40	34.205	86	44	56	32	49.143	86	28	64	40
27.500	72	24	44	48	34.286	72	28	64	48	50.167	86	24	56	40
27.643	86	56	72	40	34.554	86	56	72	32	50.260	86	28	72	44
27.922	86	28	40	44	35.000	72	24	56	48	51.429	72	28	64	32
28.000	64	40	56	32	35.102	86	28	64	56	52.121	86	24	64	44
28.052	72	28	48	44	35.182	86	44	72	40	53.750	86	28	56	32
28.155	86	28	44	48	35.833	86	48	64	32	55.286	86	28	72	40
28.636	72	44	56	32	36.000	72	40	64	32	57.333	86	24	64	40
28.667	86	48	64	40	36.857	86	28	48	40	58.636	86	24	72	44
29.091	64	28	56	44	37.403	72	28	64	44	60.000	72	24	64	32
29.318	86	48	72	44	37.625	86	40	56	32	61.429	86	28	64	32
29.388	72	28	64	56	38.182	72	24	56	44	62.708	86	24	56	32
29.563	86	40	44	32	39.091	86	44	64	32	64.500	86	24	72	40
29.861	86	24	40	48	39.417	86	24	44	40	69.107	86	28	72	32
30.000	72	48	64	32	39.490	86	28	72	56	71.667	86	24	64	32
30.234	86	64	72	32	40.000	72	24	64	48	80.625	86	24	72	32
30.714	86	56	64	32	40.313	86	48	72	32					

CHAPTER XX

MILLING SPIRAL CAMS

In this chapter we give detailed tables for setting Cincinnati Millers for Milling Screw Machine Cams and other spiral cams with leads between .600″ and 6.00″ advancing by .001″.

The cutting of accurate screw machine cams is one of the most difficult jobs that comes to the toolroom, because of the intricate computations necessary to determine the correct settings. Such cams are required in great variety, each differing from the other by only a few thousandths and with practically no duplications, making the use of master cams out of the question. These cams usually have shorter leads than can be obtained on a dividing head by any practical combination of change gears. It is therefore necessary to

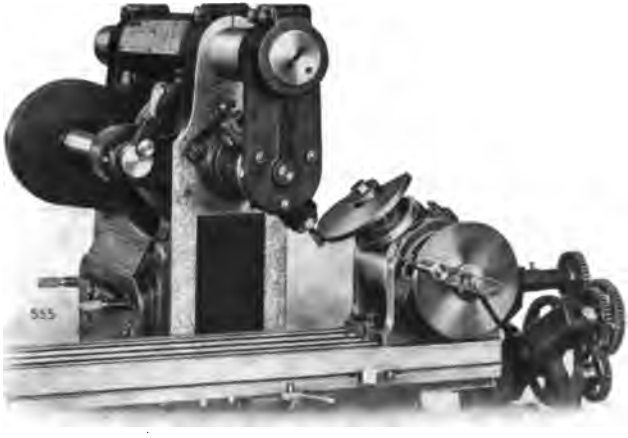

Fig. 267

use a vertical attachment in connection with the dividing head and set both of them to that angle, which, together with the lead produced by the change gears, gives the correct lead to produce the required cam.

It is the computation of these angular settings in connection

with the proper change gear combinations that involves mathematics which is sometimes too confusing for the toolmaker.

In the tables following all the information is given, and it only remains for the milling machine operator to select the lead of the desired cam from the tables and set up to the corresponding change gears and angles.

Example: To set the machine for a cam having .717″ lead.

Setting the Vertical Attachment. Read the angle direct from the dial and set the spindle 39½° from its vertical position.

Setting the Dividing Head. Subtract the angle in the table from 90°. The difference represents the angle to which the spindle must be raised from the horizontal position.

90° − 39½° = 50½°.

Set the dividing head spindle 50½° up from the horizontal position. This angle is read direct from the dial.

Follow this same method when setting up for any other similar cams.

LEAD.	GEAR ON WORM.	1ST. INTERMEDIATE.	2ND. INTERMEDIATE.	GEAR ON SCREW.	ANGLE.	LEAD.	GEAR ON WORM.	1ST. INTERMEDIATE.	2ND. INTERMEDIATE.	GEAR ON SCREW.	ANGLE.	LEAD.	GEAR ON WORM.	1ST. INTERMEDIATE.	2ND. INTERMEDIATE.	GEAR ON SCREW.	ANGLE.
.600	24	86	24	100	26½	.650	24	86	24	100	14	.700	24	72	24	100	29
.601	24	86	24	100	26	.651	24	86	28	100	33½	.701	24	72	24	86	41
.602	24	86	24	100	26	.652	24	86	24	100	13½	.702	24	86	28	100	26
.603	24	86	28	100	39½	.653	24	86	32	100	43	.703	24	72	24	100	28½
.604	24	72	24	100	41	.654	24	86	24	100	12½	.704	24	86	32	100	38
.605	24	86	24	100	25½	.655	24	86	24	100	12	.705	24	86	28	100	25½
.606	24	86	28	100	39	.656	24	86	24	100	11½	.706	24	72	24	100	28
.607	24	86	24	100	25	.657	24	86	24	100	11	.707	24	72	24	86	40½
.608	24	72	24	100	40½	.658	24	86	32	100	42½	.708	24	86	28	100	25
.609	24	86	24	100	24½	.659	24	72	24	100	34½	.709	24	72	28	100	40½
.610	24	86	24	100	24½	.660	24	86	24	100	10	.710	24	72	24	100	27½
.611	24	86	28	100	38½	.661	24	86	28	100	32	.711	24	86	28	100	24½
.612	24	86	24	100	24	.662	24	86	28	100	32	.712	24	72	24	86	40
.613	24	72	24	100	40	.663	24	72	24	100	34	.713	24	72	24	100	27
.614	24	86	24	100	23½	.664	24	86	32	100	42	.714	24	64	24	100	37½
.615	24	86	28	100	38	.665	24	72	28	100	44½	.715	24	72	28	100	40
.616	24	86	24	100	23	.666	24	86	28	100	31½	.716	24	86	28	100	23½
.617	24	72	24	100	39½	.667	24	72	24	100	33½	.717	24	72	24	86	39½
.618	24	72	24	100	39½	.668	24	64	24	100	42	.718	24	86	32	100	36½
.619	24	86	24	100	22½	.669	24	72	24	86	44	.719	24	86	28	100	23
.620	24	86	28	100	37½	.670	24	86	28	100	31	.720	24	72	28	100	39½
.621	24	86	24	100	22	.671	24	72	24	100	33	.721	24	86	28	100	22½
.622	24	72	24	100	39	.672	24	86	28	100	30½	.722	24	72	24	100	25½
.623	24	86	24	100	21½	.673	24	86	28	100	30½	.723	24	64	24	100	36½
.624	24	86	28	100	37	.674	24	64	24	100	41½	.724	24	86	28	100	22
.625	24	86	24	100	21	.675	24	72	24	100	32½	.725	24	72	24	100	25
.626	24	86	32	100	45½	.676	24	86	28	100	30	.726	24	86	28	100	21½
.627	24	86	24	100	20½	.677	24	72	28	100	43½	.727	24	86	32	100	35½
.628	24	86	28	100	36½	.678	24	72	24	100	32	.728	24	72	24	100	24½
.629	24	86	24	100	20	.679	24	86	32	100	40½	.729	24	86	28	100	21
.630	24	72	24	100	38	.680	24	72	24	86	43	.730	24	72	28	100	38½
.631	24	86	32	100	45	.681	24	72	24	100	31½	.731	24	72	24	100	24
.632	24	86	28	100	36	.682	24	72	28	100	43	.732	24	86	28	100	20½
.633	24	86	24	100	19	.683	24	86	28	100	29	.733	24	72	24	86	38
.634	24	72	24	100	37½	.684	24	86	32	100	40	.734	24	86	28	100	20
.635	24	86	24	100	18½	.685	24	72	24	86	42½	.735	24	72	28	100	38
.636	24	86	28	100	35½	.686	24	86	28	100	28½	.736	24	86	28	100	19½
.637	24	86	32	100	44½	.687	24	72	28	100	42½	.737	24	64	24	100	35
.638	24	72	24	100	37	.688	24	72	28	100	42½	.738	24	72	24	86	37½
.639	24	86	24	100	17½	.689	24	86	32	100	39½	.739	24	72	24	100	22½
.640	24	86	28	100	35	.690	24	86	28	100	28	.740	24	72	28	100	37½
.641	24	86	24	100	17	.691	24	72	24	86	42	.741	24	86	28	100	18½
.642	24	86	32	100	44	.692	24	86	28	100	27½	.742	24	72	24	100	22
.643	24	86	28	100	34½	.693	24	72	28	100	42	.743	24	86	28	100	18
.644	24	86	24	100	16	.694	24	86	32	100	39	.744	24	72	24	100	21½
.645	24	86	24	100	15½	.695	24	64	24	100	39½	.745	24	72	28	100	37
.646	24	86	24	100	15½	.696	24	86	28	100	27	.746	24	64	24	100	34
.647	24	86	24	100	15	.697	24	72	24	86	41½	.747	24	86	28	100	17
.648	24	86	32	100	43½	.698	24	72	28	100	41½	.748	24	72	24	86	36½
.649	24	86	24	100	14½	.699	24	86	32	100	38½	.749	24	86	28	100	16½

LEAD.	GEAR ON WORM.	1ST. INTERMEDIATE.	2ND. INTERMEDIATE.	GEAR ON SCREW.	ANGLE.	LEAD.	GEAR ON WORM.	1ST. INTERMEDIATE.	2ND. INTERMEDIATE.	GEAR ON SCREW.	ANGLE.	LEAD.	GEAR ON WORM.	1ST. INTERMEDIATE.	2ND. INTERMEDIATE.	GEAR ON SCREW.	ANGLE.
.750	24	72	28	100	36½	.800	24	72	28	100	31	.850	24	72	24	86	24
.751	24	86	28	100	16	.801	24	72	24	86	30½	.851	24	64	24	100	19
.752	24	72	24	100	20	.802	24	64	24	86	40	.852	24	72	28	100	24
.753	24	86	32	100	32½	.803	24	86	32	100	26	.853	24	72	24	86	23½
.754	24	72	24	100	19½	.804	28	86	32	100	39½	.854	24	86	32	100	17
.755	24	72	28	100	36	.805	24	72	32	100	41	.855	24	64	28	100	35½
.756	24	86	28	100	14½	.806	24	86	32	100	25½	.856	24	86	32	100	16½
.757	24	72	24	86	35½	.807	24	64	24	86	39½	.857	24	64	24	86	35
.758	24	86	28	100	14	.808	24	72	28	100	30	.858	24	64	24	100	17½
.759	24	64	24	100	32½	.809	24	64	24	100	26	.859	24	72	24	86	22½
.760	24	72	28	100	35½	.810	28	86	32	100	39	.860	24	64	28	100	35
.761	24	86	28	100	13	.811	24	72	32	100	40½	.861	24	72	28	86	37½
.762	24	72	24	86	35	.812	24	72	28	100	29½	.862	24	72	28	100	22½
.763	24	72	24	100	17½	.813	24	72	24	86	29	.863	24	64	24	100	16½
.764	24	86	28	100	12	.814	24	64	24	86	39	.864	28	86	32	100	34
.765	24	72	24	100	17	.815	28	86	32	100	38½	.865	24	64	24	100	16
.766	24	72	24	86	34½	.816	24	72	28	100	29	.866	24	86	32	100	14
.767	24	72	24	100	16½	.817	24	72	24	86	28½	.867	24	64	24	100	15½
.768	24	86	28	100	10½	.818	24	72	28	86	41	.868	24	72	28	100	21½
.769	24	86	28	100	10	.819	24	86	32	100	23½	.869	24	64	24	100	15
.770	24	86	32	100	30½	.820	24	72	28	100	28½	.870	24	86	32	100	13
.771	24	72	24	86	34	.821	24	72	24	86	28	.871	24	64	24	100	14½
.772	24	72	24	100	15	.822	24	86	32	100	23	.872	24	86	32	100	12½
.773	24	86	32	100	30	.823	24	72	32	100	39½	.873	24	64	24	100	14
.774	24	72	24	100	14½	.824	24	72	28	100	28	.874	24	72	24	86	20
.775	24	64	24	100	30½	.825	24	72	24	86	27½	.875	24	86	32	100	11½
.776	24	72	24	100	14	.826	28	86	32	100	37½	.876	24	64	28	100	33½
.777	24	86	32	100	29½	.827	24	72	28	100	27½	.877	24	64	24	100	13
.778	24	72	28	100	33½	.828	24	86	32	100	22	.878	24	86	32	100	10½
.779	24	72	24	100	13	.829	24	86	40	100	42	.879	24	64	24	100	12½
.780	24	72	24	86	33	.830	24	64	24	86	37½	.880	24	64	24	100	12
.781	24	72	24	100	12½	.831	24	72	28	86	40	.881	24	64	28	100	33
.782	24	72	28	100	33	.832	24	72	24	86	26½	.882	24	64	24	100	11½
.783	24	64	24	100	29½	.833	24	56	24	100	36	.883	24	64	24	86	32½
.784	24	72	24	100	11½	.834	24	86	32	100	21	.884	28	86	32	100	32
.785	24	86	32	100	28½	.835	24	72	32	100	38½	.885	24	64	24	100	10½
.786	28	86	32	100	41	.836	24	72	24	86	26	.886	24	64	24	100	10
.787	24	64	24	100	29	.837	24	72	28	86	39½	.887	24	72	24	86	17½
.788	24	72	24	100	10	.838	24	56	24	100	35½	.888	24	64	24	86	32
.789	24	72	24	86	32	.839	24	86	32	100	20	.889	24	72	24	86	17
.790	24	64	24	86	41	.840	24	64	24	100	21	.890	24	72	28	100	17½
.791	24	64	24	100	28½	.841	24	72	32	100	38	.891	24	56	24	100	30
.792	24	86	32	100	27½	.842	24	86	32	100	19½	.892	24	72	24	86	16½
.793	24	72	24	86	31½	.843	24	72	28	86	39	.893	28	86	32	100	31
.794	24	72	28	86	43	.844	24	86	32	100	19	.894	24	72	24	86	16
.795	24	72	28	100	31½	.845	24	72	28	100	25	.895	24	64	28	100	31½
.796	24	64	24	86	40½	.846	24	64	24	100	20	.896	24	72	24	86	15½
.797	24	72	24	86	31	.847	24	86	32	100	18½	.897	24	72	28	100	16
.798	28	86	32	100	40	.848	24	64	24	100	19½	.898	24	72	24	86	15
.799	24	72	32	100	41½	.849	24	86	32	100	18	.899	24	72	28	100	15½

LEAD.	GEAR ON WORM.	1ST. INTERMEDIATE.	2ND. INTERMEDIATE.	GEAR ON SCREW.	ANGLE.	LEAD.	GEAR ON WORM.	1ST. INTERMEDIATE.	2ND. INTERMEDIATE.	GEAR ON SCREW.	ANGLE.	LEAD.	GEAR ON WORM.	1ST. INTERMEDIATE.	2ND. INTERMEDIATE.	GEAR ON SCREW.	ANGLE.
.900	24	56	24	100	29	.950	24	72	32	86	40	1.000	24	86	44	100	35½
.901	24	72	28	100	15	.951	24	56	24	100	22½	1.001	24	56	24	100	13½
.902	24	72	24	86	14	.952	28	86	32	100	24	1.002	28	86	32	100	16
.903	24	72	28	100	14½	.953	24	64	24	86	24½	1.003	24	56	24	100	13
.904	24	72	24	86	13½	.954	24	56	24	100	22	1.004	28	86	32	100	15½
.905	24	72	28	100	14	.955	24	72	32	100	26½	1.005	24	56	24	100	12½
.906	24	72	24	86	13	.956	24	64	28	86	38½	1.006	24	56	24	100	12
.907	24	72	28	100	13½	.957	24	56	24	100	21½	1.007	24	64	24	86	16
.908	24	72	24	86	12½	.958	24	72	28	86	28	1.008	24	56	24	100	11½
.909	24	72	28	100	13	.959	24	72	32	100	26	1.009	28	86	32	100	14½
.910	24	72	32	100	31½	.960	24	64	24	86	23½	1.010	24	56	24	100	11
.911	24	72	28	100	12½	.961	24	86	44	100	38½	1.011	28	86	32	100	14
.912	24	72	28	100	12	.962	24	72	28	86	27½	1.012	24	56	24	100	10½
.913	24	72	24	86	11	.963	28	86	32	100	22½	1.013	24	56	24	100	10
.914	24	72	28	100	11½	.964	24	56	24	100	20½	1.014	24	64	24	86	14½
.915	24	72	32	100	31	.965	24	64	32	100	36½	1.015	28	86	32	100	13
.916	24	72	24	86	10	.966	28	86	32	100	22	1.016	24	64	24	86	14
.917	24	72	28	100	10½	.967	24	56	24	100	20	1.017	28	86	32	100	12½
.918	24	64	28	100	29	.968	24	56	24	86	36	1.018	24	64	24	86	13½
.919	24	72	28	100	10	.969	24	64	28	86	37½	1.019	28	86	32	100	12
.920	28	86	32	100	28	.970	24	56	24	100	19½	1.020	24	64	24	86	13
.921	24	56	24	100	26½	.971	24	72	28	86	26½	1.021	28	86	32	100	11½
.922	24	64	28	86	41	.972	86	44	32	64	6	1.022	24	64	24	86	12½
.923	24	64	28	100	28½	.973	24	56	24	100	19	1.023	28	86	32	100	11
.924	28	86	32	100	27½	.974	24	64	24	86	21½	1.024	24	64	24	86	12
.925	24	56	24	100	26	.975	24	72	32	100	24	1.025	24	64	28	100	12½
.926	24	64	32	100	39½	.976	28	86	32	100	20½	1.026	24	64	24	86	11½
.927	24	64	28	100	28	.977	24	64	28	100	21½	1.027	24	64	28	100	12
.928	24	64	28	86	40½	.978	24	56	24	100	18	1.028	24	64	24	86	11
.929	24	56	24	100	25½	.979	28	86	32	100	20	1.029	24	64	28	100	11½
.930	24	72	28	86	31	.980	24	64	28	100	21	1.030	24	64	24	86	10½
.931	24	64	28	100	27½	.981	24	64	24	86	20½	1.031	24	64	28	100	11
.932	28	72	32	100	41½	.982	28	86	32	100	19½	1.032	24	64	28	100	10½
.933	24	64	24	86	27	.983	24	72	28	86	25	1.033	24	72	32	100	14½
.934	24	86	44	100	40½	.984	24	56	24	100	17	1.034	24	64	28	100	10
.935	24	72	28	86	30½	.985	28	86	32	100	19	1.035	24	72	32	100	14
.936	24	56	24	100	24½	.986	24	72	32	100	22½	1.036	24	56	24	86	30
.937	24	64	24	86	26½	.987	24	64	24	86	19½	1.037	24	72	32	100	13½
.938	24	72	32	100	28½	.988	28	86	32	100	18½	1.038	24	72	28	86	17
.939	24	64	32	100	38½	.989	24	56	24	100	16	1.039	24	64	32	100	30
.940	24	56	24	100	24	.990	24	64	24	86	19	1.040	24	72	32	100	13
.941	24	64	24	86	26	.991	28	86	32	100	18	1.041	24	56	24	86	29½
.942	24	72	32	100	28	.992	24	56	24	100	15½	1.042	24	72	32	100	12½
.943	24	72	32	86	40½	.993	24	64	24	86	18½	1.043	24	72	28	86	16
.944	24	56	24	100	23½	.994	24	56	24	100	15	1.044	24	72	32	100	12
.945	24	64	24	86	25½	.995	24	72	28	86	23½	1.045	24	86	40	100	20½
.946	24	72	32	100	27½	.996	24	56	24	100	14½	1.046	24	72	32	100	11½
.947	24	56	24	100	23	.997	24	56	24	86	33½	1.047	24	72	32	100	11
.948	28	86	32	100	24½	.998	24	56	24	100	14	1.048	24	72	28	86	15
.949	24	64	24	86	25	.999	28	86	32	100	16½	1.049	24	72	32	100	10½

LEAD.	GEAR ON WORM.	1ST. INTERMEDIATE.	2ND. INTERMEDIATE.	GEAR ON SCREW.	ANGLE.
L.050	24	72	28	86	14½
L.051	24	72	32	100	10
L.052	24	86	40	100	19½
L.053	24	72	28	86	14
L.054	24	72	28	86	14
L.055	24	72	28	86	13½
L.056	24	56	24	86	28
L.057	24	72	28	86	13
L.058	24	86	40	100	18½
L.059	24	72	28	86	12½
L.060	28	86	40	100	35½
L.061	24	72	28	86	12
L.062	24	72	28	86	12
L.063	24	72	28	86	11½
L.064	24	86	40	100	17½
L.065	24	72	28	86	11
L.066	24	56	24	86	27
L.067	24	72	28	86	10½
L.068	24	64	28	86	29
L.069	24	72	28	86	10
L.070	24	86	40	100	16½
L.071	32	56	24	100	38½
L.072	28	72	32	100	30½
L.073	24	86	40	100	16
L.074	24	64	32	100	26½
L.075	24	86	40	100	15½
L.076	24	64	32	86	39½
L.077	28	72	32	100	30
L.078	24	86	40	100	15
L.079	24	56	24	86	25½
L.080	24	86	40	100	14½
L.081	28	64	32	100	39½
L.082	28	86	44	100	41
L.083	24	86	40	100	14
L.084	24	56	24	86	25
L.085	24	86	40	100	13½
L.086	28	86	40	100	33½
L.087	24	86	40	100	13
L.088	24	56	24	86	24½
L.089	24	86	40	100	12½
L.090	24	72	32	86	28½
L.091	24	86	48	100	35½
L.092	24	86	40	100	12
L.093	24	56	24	86	24
L.094	24	86	40	100	11½
L.095	24	72	32	86	28
L.096	24	86	40	100	11
L.097	24	86	40	100	10½
L.098	28	72	32	100	28
L.099	24	86	40	100	10
L100	28	72	32	86	40½
L101	24	56	24	86	23
L102	24	64	28	86	25½
L103	28	72	32	100	27½
L104	24	86	44	100	26
L105	24	56	24	86	22½
L106	40	64	24	100	42½
L107	24	64	28	86	25
L108	24	86	44	100	25½
L109	24	56	24	86	22
L110	24	72	32	86	26½
L111	24	64	28	86	24½
L112	24	72	40	100	33½
L113	24	56	24	86	21½
L114	24	64	32	86	37
L115	24	64	28	86	24
L116	24	56	24	86	21
L117	24	86	44	100	24½
L118	28	72	32	100	26
L119	24	72	32	86	25½
L120	24	56	24	86	20½
L121	24	64	32	86	36½
L122	24	86	44	100	24
L123	28	72	32	100	25½
L124	24	56	24	86	20
L125	28	64	32	100	36½
L126	24	86	44	100	23½
L127	24	56	24	86	19½
L128	24	64	32	100	20
L129	24	64	32	86	36
L130	24	72	40	100	32
L131	24	56	24	86	19
L132	24	64	28	86	22
L133	24	72	32	86	24
L134	24	56	24	86	18½
L135	24	64	32	100	19
L136	24	64	28	86	21½
L137	24	56	24	86	18
L138	24	64	32	100	18½
L139	28	86	40	100	29
L140	24	64	28	86	21
L141	24	56	24	86	17½
L142	24	64	32	86	35
L143	24	86	44	100	21½
L144	24	56	24	86	17
L145	28	72	32	100	23
L146	24	86	44	100	21
L147	24	56	24	86	16½
L148	24	64	32	100	17
L149	28	72	32	100	22½
L150	24	56	24	86	16
L151	24	64	32	100	16½
L152	28	86	44	100	36½
L153	24	56	24	86	15½
L154	24	64	28	86	19
L155	24	56	24	86	15
L156	24	64	32	100	15½
L157	28	72	32	100	21½
L158	24	56	24	86	14½
L159	24	64	32	100	15
L160	24	56	24	86	14
L161	24	64	28	86	18
L162	24	64	32	100	14½
L163	24	56	24	86	13½
L164	24	64	32	100	14
L165	24	56	24	86	13
L166	24	72	40	100	29
L167	24	64	32	100	13½
L168	24	56	24	86	12½
L169	24	64	32	100	13
L170	24	56	24	86	12
L171	24	64	28	86	16½
L172	24	56	24	86	11½
L173	28	72	32	100	19½
L174	24	56	24	86	11
L175	28	86	40	100	25½
L176	24	56	24	86	10½
L177	24	64	28	86	15½
L178	24	56	24	86	10
L179	24	64	28	86	15
L180	24	64	32	100	10½
L181	32	56	24	100	30½
L182	24	64	32	100	10
L183	24	86	44	100	15½
L184	24	64	32	100	9½
L185	24	64	28	86	14
L186	24	86	44	100	15
L187	24	64	28	86	13½
L188	24	72	40	100	27
L189	24	86	44	100	14½
L190	24	64	28	86	13
L191	24	86	44	100	14
L192	24	64	28	86	12½
L193	28	72	32	100	16½
L194	24	64	28	86	12
L195	24	72	32	86	15½
L196	28	72	32	100	16
L197	24	64	28	86	11½
L198	24	72	32	86	15
L199	24	64	28	86	11

LEAD.	GEAR ON WORM.	1ST. INTERMEDIATE.	2ND. INTERMEDIATE.	GEAR ON SCREW.	ANGLE.	LEAD.	GEAR ON WORM.	1ST. INTERMEDIATE.	2ND. INTERMEDIATE.	GEAR ON SCREW.	ANGLE.	LEAD.	GEAR ON WORM.	1ST. INTERMEDIATE.	2ND. INTERMEDIATE.	GEAR ON SCREW.	ANGLE.
1.200	24	72	32	86	14½	1.250	24	64	28	72	31	1.300	24	86	48	100	14
1.201	24	64	28	86	10½	1.251	24	86	48	100	21	1.301	24	72	40	100	12½
1.202	24	64	28	86	10	1.252	28	86	40	100	16	1.302	24	64	32	86	21
1.203	24	86	44	100	11½	1.253	24	72	40	100	20	1.303	24	86	48	100	13½
1.204	28	72	32	100	14½	1.254	24	64	32	86	26	1.304	24	72	40	100	12
1.205	24	86	44	100	11	1.255	28	86	40	100	15½	1.305	24	64	28	72	26½
1.206	24	72	32	86	13½	1.256	24	64	28	72	30½	1.306	24	72	40	100	11½
1.207	24	86	44	100	10½	1.257	24	72	40	100	19½	1.307	32	56	24	100	17½
1.208	24	72	32	86	13	1.258	28	86	40	100	15	1.308	24	72	40	100	11
1.209	24	86	44	100	10	1.259	24	86	48	100	20	1.309	28	86	44	100	24
1.210	28	72	32	100	13½	1.260	28	86	40	100	14½	1.310	24	64	28	72	26
1.211	24	72	32	86	12½	1.261	28	86	40	100	14½	1.311	24	72	40	100	10½
1.212	28	72	32	100	13	1.262	32	56	24	100	23	1.312	40	64	24	100	29
1.213	24	72	32	86	12	1.263	28	86	40	100	14	1.313	24	72	40	100	10
1.214	24	86	48	100	25	1.264	24	72	40	100	18½	1.314	28	86	44	100	23½
1.215	24	72	32	86	11½	1.265	28	86	44	100	28	1.315	24	86	48	100	11
1.216	32	56	24	100	27½	1.266	28	86	40	100	13½	1.316	28	64	32	100	20
1.217	24	72	32	86	11	1.267	24	86	48	100	19	1.317	28	72	32	86	24½
1.218	24	72	40	100	24	1.268	24	72	40	100	18	1.318	24	86	48	100	10½
1.219	24	72	32	86	10½	1.269	28	86	40	100	13	1.319	24	64	32	86	19
1.220	28	86	40	100	20½	1.270	24	72	44	100	30	1.320	24	86	48	100	10
1.221	24	72	32	86	10	1.271	28	86	40	100	12½	1.321	32	56	24	100	15½
1.222	24	72	40	100	23½	1.272	28	72	32	86	28½	1.322	28	72	32	86	24
1.223	28	72	32	100	10½	1.273	28	86	40	100	12	1.323	24	64	32	86	18½
1.224	28	86	40	100	20	1.274	28	86	40	100	12	1.324	32	56	24	100	16
1.225	28	72	32	100	10	1.275	24	72	40	100	17	1.325	28	86	48	100	32
1.226	24	72	48	100	40	1.276	28	86	40	100	11½	1.326	32	86	40	100	27
1.227	28	86	40	100	19½	1.277	28	86	44	100	27	1.327	32	56	24	100	14½
1.228	28	86	44	100	31	1.278	28	86	40	100	11	1.328	28	64	32	100	18½
1.229	24	86	48	100	23½	1.279	24	64	32	86	23½	1.329	28	86	44	100	22
1.230	28	64	32	100	28½	1.280	28	86	40	100	10½	1.330	32	56	24	100	14
1.231	28	86	40	100	19	1.281	24	72	40	100	16	1.331	28	64	32	100	18
1.232	24	72	40	100	22½	1.282	28	86	40	100	10	1.332	28	64	32	100	18
1.233	32	86	40	100	34	1.283	28	72	32	86	27½	1.333	32	56	24	100	13½
1.234	24	86	48	100	25	1.284	24	72	40	100	15½	1.334	24	64	32	86	17
1.235	28	86	40	100	18½	1.285	24	72	40	100	15½	1.335	28	64	32	100	17½
1.236	24	72	40	100	22	1.286	40	64	24	100	31	1.336	32	56	24	100	13
1.237	32	56	24	100	25½	1.287	24	72	40	100	15	1.337	28	72	32	86	22½
1.238	28	86	40	100	18	1.288	24	72	40	100	15	1.338	32	56	24	100	12½
1.239	24	64	32	72	42	1.289	24	64	32	86	22½	1.339	32	56	24	100	12½
1.240	24	72	40	100	21½	1.290	24	72	40	100	14½	1.340	24	72	44	100	24
1.241	28	86	44	100	30	1.291	24	72	40	100	14½	1.341	32	56	24	100	12
1.242	28	86	40	100	17½	1.292	32	56	24	100	19½	1.342	28	64	32	100	16½
1.243	32	56	24	100	25	1.293	24	72	40	100	14	1.343	32	56	24	100	11½
1.244	24	72	40	100	21	1.294	24	86	48	100	15	1.344	24	64	32	86	15½
1.245	28	86	40	100	17	1.295	28	72	32	86	26½	1.345	24	72	44	100	23½
1.246	32	72	40	100	45½	1.296	24	72	40	100	13½	1.346	32	56	24	100	11
1.247	24	86	48	100	21½	1.297	24	86	48	100	14½	1.347	24	64	32	86	15
1.248	28	86	40	100	16½	1.298	24	64	32	86	21½	1.348	32	56	24	100	10½
1.249	24	72	40	100	20½	1.299	24	72	40	100	13	1.349	28	64	32	100	15½

LEAD.	GEAR ON WORM.	1ST. INTERMEDIATE.	2ND. INTERMEDIATE.	GEAR ON SCREW.	ANGLE.
1.350	32	56	24	100	10
1.351	24	64	32	86	14½
1.352	28	64	32	100	15
1.353	24	72	44	86	37½
1.354	24	64	32	86	14
1.355	28	64	32	100	14½
1.356	24	64	32	86	13½
1.357	24	64	28	72	21½
1.358	28	64	32	100	14
1.359	24	64	32	86	13
1.360	28	72	32	86	20
1.361	28	64	32	100	13½
1.362	24	64	32	86	12½
1.363	28	86	44	100	18
1.364	24	64	32	86	12
1.365	24	64	32	86	12
1.366	24	64	28	72	20½
1.367	24	64	32	86	11½
1.368	28	72	32	86	19
1.369	24	64	32	86	11
1.370	28	86	44	100	17
1.371	24	64	32	86	10½
1.372	24	64	32	86	10½
1.373	28	64	44	100	44½
1.374	24	64	32	86	10
1.375	32	86	40	100	22½
1.376	28	72	32	86	18
1.377	28	64	32	100	10½
1.378	28	86	44	100	16
1.379	28	64	32	100	10
1.380	28	72	32	86	17½
1.381	28	86	44	100	15½
1.382	24	64	32	72	34
1.383	24	64	28	72	18½
1.384	28	86	44	100	15
1.385	28	64	44	100	44
1.386	40	64	24	100	22½
1.387	28	86	44	100	14½
1.388	28	64	32	86	31½
1.389	32	86	40	100	21
1.390	28	86	44	100	14
1.391	28	72	32	86	16
1.392	44	64	24	100	32½
1.393	28	86	44	100	13½
1.394	28	72	32	86	15½
1.395	24	72	44	100	18
1.396	28	86	44	100	13
1.397	24	72	44	86	36
1.398	28	72	32	86	15
1.399	28	86	44	100	12½
1.400	40	64	24	100	21
1.401	28	72	32	86	14½
1.402	28	86	44	100	12
1.403	24	72	44	100	17
1.404	28	72	32	86	14
1.405	24	64	28	72	15½
1.406	28	86	44	100	11
1.407	28	72	32	86	13½
1.408	24	64	28	72	15
1.409	28	86	44	100	10½
1.410	28	72	32	86	13
1.411	28	86	48	100	25½
1.412	24	64	28	72	14½
1.413	28	72	32	86	12½
1.414	24	72	44	100	15½
1.415	28	72	32	86	12
1.416	24	64	44	86	42½
1.417	24	72	44	100	15
1.418	28	72	32	86	11½
1.419	32	86	40	100	17½
1.420	28	72	32	86	11
1.421	24	64	28	72	13
1.422	40	64	24	100	18½
1.423	28	72	32	86	10½
1.424	28	64	32	86	29
1.425	28	72	32	86	10
1.426	24	64	28	72	12
1.427	32	86	40	100	16½
1.428	28	86	48	100	24
1.429	24	64	28	72	11½
1.430	32	86	40	100	16
1.431	24	64	28	72	11
1.432	24	72	44	100	12½
1.433	28	86	48	100	23½
1.434	24	64	28	72	10½
1.435	24	72	44	100	12
1.436	24	64	28	72	10
1.437	32	86	40	100	15
1.438	24	72	44	100	11½
1.439	28	86	48	100	23
1.440	24	72	44	100	11
1.441	32	86	40	100	14½
1.442	24	72	44	100	10½
1.443	24	72	44	100	10½
1.444	32	86	40	100	14
1.445	24	72	44	100	10
1.446	24	72	44	86	32
1.447	32	56	40	100	13½
1.448	28	72	40	100	21½
1.449	40	64	24	100	15
1.450	32	86	40	100	13
1.451	28	64	32	86	27
1.452	40	64	24	100	14½
1.453	32	86	40	100	12½
1.454	28	86	48	100	21½
1.455	32	86	40	100	12
1.456	24	72	40	86	20
1.457	24	72	40	86	20
1.458	32	86	40	100	11½
1.459	40	64	24	100	13½
1.460	24	44	32	86	44
1.461	32	86	40	100	11
1.462	40	64	24	100	13
1.463	32	86	40	100	10½
1.464	40	64	24	100	12½
1.465	32	86	40	100	10
1.466	24	72	40	86	19
1.467	40	64	24	100	12
1.468	28	64	40	100	33
1.469	28	86	48	100	20
1.470	40	64	24	100	11½
1.471	28	72	40	100	19
1.472	40	64	24	100	11
1.473	40	64	24	100	11
1.474	24	72	40	86	18
1.475	40	64	24	100	10½
1.476	28	72	40	100	18½
1.477	40	64	24	100	10
1.478	24	72	40	86	17½
1.479	24	64	32	72	27½
1.480	28	72	40	100	18
1.481	28	64	32	86	24½
1.482	24	72	40	86	17
1.483	44	64	24	100	26
1.484	28	72	40	100	17½
1.485	24	64	32	72	27
1.486	24	72	40	86	16½
1.487	28	86	48	100	18
1.488	28	72	40	100	17
1.489	24	72	48	100	21½
1.490	24	72	40	86	16
1.491	28	86	48	100	17½
1.492	28	72	40	100	16½
1.493	28	64	32	86	23½
1.494	24	72	40	86	15½
1.495	28	86	48	100	17
1.496	28	72	40	100	16
1.497	24	72	40	86	15
1.498	32	64	40	100	41½
1.499	28	72	40	100	15½

LEAD.	GEAR ON WORM.	1ST. INTERMEDIATE.	2ND. INTERMEDIATE.	GEAR ON SCREW.	ANGLE.	LEAD.	GEAR ON WORM.	1ST. INTERMEDIATE.	2ND. INTERMEDIATE.	GEAR ON SCREW.	ANGLE.	LEAD.	GEAR ON WORM.	1ST. INTERMEDIATE.	2ND. INTERMEDIATE.	GEAR ON SCREW.	ANGLE.
1.500	28	64	40	100	31	1.550	44	64	24	100	20	1.600	44	56	24	100	21
1.501	32	86	44	100	23½	1.551	44	64	24	100	20	1.601	28	64	32	86	10½
1.502	28	86	48	100	16	1.552	24	72	48	100	14	1.602	24	64	32	72	16
1.503	28	72	40	100	15	1.553	28	64	32	72	37	1.603	28	64	32	86	10
1.504	24	72	40	86	14	1.554	24	64	40	86	27	1.604	32	86	44	100	11½
1.505	24	64	32	72	25½	1.555	44	64	24	100	19½	1.605	40	56	24	100	20½
1.506	28	72	40	100	14½	1.556	24	64	32	72	21	1.606	24	64	32	72	15½
1.507	24	72	40	86	13½	1.557	28	64	32	86	17	1.607	32	86	44	100	11
1.508	24	72	48	100	19½	1.558	24	72	44	86	24	1.608	44	64	24	100	13
1.509	28	64	32	86	22	1.559	24	72	48	100	13	1.609	28	72	48	100	30½
1.510	24	72	40	86	13	1.560	44	64	24	100	19	1.610	32	86	44	100	10½
1.511	24	64	32	72	25	1.561	28	64	32	86	16½	1.611	44	64	24	100	12½
1.512	24	64	44	86	38	1.562	24	72	48	100	12½	1.612	32	86	44	100	10
1.513	24	72	40	86	12½	1.563	28	72	44	100	24	1.613	28	72	44	100	19½
1.514	24	72	48	86	35½	1.564	24	72	44	86	23½	1.614	44	64	24	100	12
1.515	28	64	32	86	21½	1.565	24	72	48	100	12	1.615	24	64	48	86	39½
1.516	24	72	40	86	12	1.566	32	86	44	100	17	1.616	40	56	24	100	19½
1.517	24	72	48	100	18½	1.567	28	64	44	100	35½	1.617	44	64	24	100	11½
1.518	32	86	44	100	22	1.568	24	72	48	100	11½	1.618	24	64	32	72	14
1.519	24	72	40	86	11½	1.569	28	64	32	86	15½	1.619	32	86	48	100	28
1.520	28	86	48	100	13½	1.570	32	72	40	100	28	1.620	44	64	24	100	11
1.521	24	72	40	86	11	1.571	24	72	48	100	11	1.621	24	64	32	72	13½
1.522	24	72	40	86	11	1.572	28	64	32	86	15	1.622	44	64	24	100	10½
1.523	28	86	48	100	13	1.573	24	72	48	100	10½	1.623	28	72	44	100	18½
1.524	24	72	40	86	10½	1.574	32	86	44	100	16	1.624	24	64	32	72	13
1.525	28	72	40	100	11½	1.575	24	72	44	86	22½	1.625	44	64	24	100	10
1.526	24	72	40	86	10	1.576	24	72	48	100	10	1.626	24	72	44	86	17½
1.527	28	72	40	100	11	1.577	32	86	44	100	15½	1.627	24	64	32	72	12½
1.528	32	86	44	100	21	1.578	44	64	24	100	17	1.628	24	64	32	72	12½
1.529	28	86	48	100	12	1.579	28	100	56	86	30	1.629	32	72	40	86	38
1.530	28	72	40	100	10½	1.580	28	64	32	86	14	1.630	24	64	32	72	12
1.531	28	72	44	100	26½	1.581	32	86	44	100	15	1.631	24	64	32	72	12
1.532	28	72	40	100	10	1.582	44	64	24	100	16½	1.632	28	72	44	100	17½
1.533	32	86	44	100	20½	1.583	28	64	32	86	13½	1.633	28	72	40	86	25½
1.534	28	86	48	100	11	1.584	40	56	24	100	22½	1.634	24	64	32	72	11½
1.535	28	64	32	86	19½	1.585	32	86	44	100	14½	1.635	24	72	44	86	16½
1.536	32	72	40	86	42	1.586	28	64	32	86	13	1.636	24	64	32	72	11
1.537	28	86	48	100	10½	1.587	24	64	40	86	24½	1.637	32	72	40	100	23
1.538	24	72	48	100	16	1.588	32	86	44	100	14	1.638	32	86	48	100	23½
1.539	28	86	48	100	10	1.589	28	64	32	86	12½	1.639	24	64	32	72	10½
1.540	28	100	56	72	45	1.590	44	64	24	100	15½	1.640	28	72	40	86	25
1.541	40	56	24	100	26	1.591	32	72	40	100	26½	1.641	28	72	44	100	16½
1.542	24	72	48	100	15½	1.592	28	64	32	86	12	1.642	24	64	32	72	10
1.543	32	86	44	100	19½	1.593	24	64	40	86	24	1.643	24	72	44	86	15½
1.544	28	64	32	86	18½	1.594	44	64	24	100	15	1.644	24	64	40	86	19½
1.545	24	72	48	100	15	1.595	28	64	32	86	11½	1.645	28	72	44	100	16
1.546	24	72	48	100	15	1.596	28	64	44	100	34	1.646	28	72	40	86	24½
1.547	40	56	24	100	25½	1.597	44	64	24	100	14½	1.647	24	72	44	86	15
1.548	28	64	32	86	18	1.598	28	64	32	86	11	1.648	40	56	24	100	16
1.549	24	72	48	100	14½	1.599	24	64	40	86	23½	1.649	28	72	44	100	15½

LEAD.	GEAR ON WORM.	1ST. INTERMEDIATE.	2ND. INTERMEDIATE.	GEAR ON SCREW.	ANGLE.
1.650	28	64	40	100	19½
1.651	24	72	44	86	14½
1.652	40	56	24	100	15½
1.653	28	72	44	100	15
1.654	24	72	44	86	14
1.655	28	64	40	100	19
1.656	28	72	44	100	14½
1.657	28	72	44	100	14½
1.658	24	72	44	86	13½
1.659	24	64	40	86	18
1.660	28	72	44	100	14
1.661	24	72	44	86	13
1.662	32	86	48	100	21½
1.663	40	56	24	100	14
1.664	28	72	44	100	13½
1.665	24	72	44	86	12½
1.666	28	64	32	72	31
1.667	28	72	44	100	13
1.668	24	72	44	86	12
1.669	28	64	40	100	17½
1.670	28	72	44	100	12½
1.671	24	72	44	86	11½
1.672	24	64	40	86	16½
1.673	40	56	24	100	12½
1.674	24	72	44	86	11
1.675	28	64	44	100	29½
1.676	24	72	44	86	10½
1.677	28	72	44	100	11½
1.678	28	64	40	100	16½
1.679	24	72	44	86	10
1.680	28	72	44	100	11
1.681	24	64	40	86	15½
1.682	28	72	44	100	10½
1.683	40	56	24	100	11
1.684	32	86	48	100	19½
1.685	28	72	44	100	10
1.686	28	64	40	100	15½
1.687	32	64	40	100	32½
1.688	40	56	24	100	10
1.689	32	86	48	100	19
1.690	28	64	40	100	15
1.691	32	72	40	100	18
1.692	24	64	40	86	14
1.693	24	72	48	86	24½
1.694	32	72	44	100	30
1.695	44	56	24	100	26
1.696	24	64	40	86	13½
1.697	28	72	44	86	31½
1.698	28	64	40	100	14
1.699	24	64	40	86	15
1.700	32	72	40	100	17
1.701	32	64	40	86	43
1.702	28	64	40	100	13½
1.703	24	64	40	86	12½
1.704	28	64	40	72	45½
1.705	28	64	40	100	13
1.706	24	64	40	86	12
1.707	40	86	44	100	33½
1.708	28	64	40	100	12½
1.709	24	64	40	86	11½
1.710	28	72	40	86	19
1.711	32	72	44	100	29
1.712	24	64	40	86	11
1.713	32	72	40	100	15½
1.714	32	64	40	100	31
1.715	24	64	40	86	10½
1.716	28	72	40	86	18½
1.717	32	72	40	100	15
1.718	24	64	40	86	10
1.719	28	72	48	100	23
1.720	28	72	40	86	18
1.721	28	64	40	100	10½
1.722	24	44	32	86	32
1.723	28	64	40	100	10
1.724	28	100	56	86	19
1.725	32	72	40	100	14
1.726	24	56	40	86	30
1.727	32	72	44	100	28
1.728	32	72	40	100	13½
1.729	32	72	40	100	13½
1.730	28	72	40	86	17
1.731	24	72	48	86	21½
1.732	32	72	40	100	13
1.733	32	86	48	100	14
1.734	28	72	40	86	16½
1.735	28	72	40	86	16½
1.736	32	72	40	100	12½
1.737	32	86	48	100	13½
1.738	32	56	40	100	40½
1.739	32	72	40	100	12
1.740	32	86	48	100	13
1.741	28	72	44	86	29
1.742	32	72	40	100	11½
1.743	28	72	40	86	15½
1.744	32	86	48	100	12½
1.745	32	72	40	100	11
1.746	24	64	44	86	24½
1.747	32	86	48	100	12
1.748	32	72	40	100	10½
1.749	28	72	48	100	20½
1.750	32	86	48	100	11½
1.751	32	72	40	100	10
1.752	28	100	56	86	16
1.753	32	86	48	100	11
1.754	28	72	48	100	20
1.755	28	72	40	86	14
1.756	32	86	48	100	10½
1.757	28	100	56	86	15½
1.758	32	72	44	100	26
1.759	32	86	48	100	10
1.760	28	72	48	100	19½
1.761	28	100	56	86	15
1.762	28	64	32	72	25
1.763	28	72	40	86	13
1.764	24	72	48	86	18½
1.765	28	100	56	86	14½
1.766	28	72	40	86	12½
1.767	44	56	24	100	20½
1.768	32	72	48	100	34
1.769	28	72	40	86	12
1.770	28	72	48	100	18½
1.771	28	72	48	100	18½
1.772	44	56	24	100	20
1.773	28	72	40	86	11½
1.774	24	72	48	86	17½
1.775	24	44	32	86	29
1.776	28	72	40	86	11
1.777	32	56	40	100	39
1.778	44	56	24	100	19½
1.779	28	72	40	86	10½
1.780	28	100	56	86	12½
1.781	28	72	40	86	10
1.782	32	64	40	100	27
1.783	28	100	56	86	12
1.784	24	56	40	86	26½
1.785	28	72	48	100	17
1.786	28	100	56	86	11½
1.787	32	72	44	100	24
1.788	24	72	48	86	16
1.789	28	100	56	86	11
1.790	28	100	56	86	11
1.791	24	64	44	86	21
1.792	28	100	56	86	10½
1.793	28	100	56	86	10½
1.794	44	56	24	100	18
1.795	28	100	56	86	10
1.796	28	64	32	72	22½
1.797	24	72	48	86	15
1.798	24	64	44	86	20½
1.799	28	72	48	100	15½

LEAD.	GEAR ON WORM.	1ST. INTERMEDIATE.	2ND. INTERMEDIATE.	GEAR ON SCREW.	ANGLE.
1.800	32	72	44	100	23
1.801	24	72	48	86	14½
1.802	28	64	32	72	22
1.803	28	72	48	100	15
1.804	32	72	44	86	37½
1.805	24	72	48	86	14
1.806	24	56	40	86	25
1.807	28	72	48	100	14½
1.808	28	72	48	100	14½
1.809	24	72	48	86	13½
1.810	28	72	48	86	33½
1.811	28	72	48	100	14
1.812	24	72	48	86	13
1.813	44	56	24	100	16
1.814	24	64	44	86	19
1.815	28	72	48	100	13½
1.816	24	72	48	86	12½
1.817	44	56	24	100	15½
1.818	28	72	44	86	24
1.819	24	72	48	86	12
1.820	24	64	44	86	18½
1.821	28	64	32	72	20½
1.822	44	56	24	100	15
1.823	24	72	48	86	11½
1.824	40	86	44	100	27
1.825	24	64	44	86	18
1.826	24	72	48	86	11
1.827	28	64	32	72	20
1.828	24	56	40	86	23½
1.829	24	72	48	86	10½
1.830	28	72	48	100	11½
1.831	28	64	44	100	18
1.832	24	72	48	86	10
1.833	28	72	48	100	11
1.834	44	56	24	100	13½
1.835	24	64	44	86	17
1.836	28	72	48	100	10½
1.837	28	64	40	86	25½
1.838	44	56	24	100	13
1.839	28	72	48	100	10
1.840	24	64	44	86	16½
1.841	44	56	24	100	12½
1.842	32	72	40	86	27
1.843	28	64	48	86	41
1.844	28	64	32	72	18½
1.845	44	56	24	100	12
1.846	28	64	44	100	16½
1.847	24	44	32	86	24½
1.848	44	56	24	100	11½
1.849	24	64	44	86	15½
1.850	28	64	44	100	16
1.851	44	56	24	100	11
1.852	28	72	44	86	21½
1.853	28	56	32	72	33½
1.854	44	56	24	100	10½
1.855	28	64	44	100	15½
1.856	24	64	40	72	27
1.857	44	56	24	100	10
1.858	24	64	44	86	14½
1.859	28	64	44	100	15
1.860	32	72	44	100	18
1.861	24	56	40	86	21
1.862	24	64	44	86	14
1.863	24	56	40	86	20½
1.864	28	64	44	100	14½
1.865	32	72	44	100	17½
1.866	24	64	44	86	13½
1.867	32	64	40	100	21
1.868	28	64	44	100	14
1.869	28	64	32	72	16
1.870	24	64	44	86	13
1.871	32	72	44	100	17
1.872	28	64	44	100	13½
1.873	24	64	44	86	12½
1.874	24	64	44	86	12½
1.875	32	72	44	100	16½
1.876	28	64	44	100	13
1.877	24	64	44	86	12
1.878	28	64	32	72	15
1.879	28	64	44	100	12½
1.880	24	64	44	86	11½
1.881	32	72	40	86	24½
1.882	28	64	32	72	14½
1.883	28	64	44	100	12
1.884	24	64	44	86	11
1.885	32	72	44	100	15½
1.886	28	64	44	100	11½
1.887	24	64	44	86	10½
1.888	28	72	44	86	18½
1.889	32	72	44	100	15
1.890	24	64	44	86	10
1.891	32	64	40	100	19
1.892	32	72	48	100	27½
1.893	28	64	44	100	10½
1.894	28	64	32	72	13
1.895	24	56	40	86	18
1.896	28	64	44	100	10
1.897	32	64	40	100	18½
1.898	28	64	32	72	12½
1.899	28	72	48	86	29
1.900	28	64	40	86	21
1.901	28	64	32	72	12
1.902	28	64	32	72	12
1.903	28	72	44	86	17
1.904	24	64	48	86	24½
1.905	28	64	32	72	11½
1.906	32	72	44	100	13
1.907	32	64	40	100	17½
1.908	28	64	32	72	11
1.909	32	72	48	100	26½
1.910	32	72	44	100	12½
1.911	24	56	40	86	16½
1.912	28	64	32	72	10½
1.913	32	72	44	100	12
1.914	28	64	32	72	10
1.915	28	64	32	72	10
1.916	24	56	40	86	16
1.917	32	72	44	100	11½
1.918	28	72	44	86	15½
1.919	24	44	32	86	19
1.920	32	72	44	100	11
1.921	24	56	40	86	15½
1.922	28	72	44	86	15
1.923	32	72	44	100	10½
1.924	28	64	40	86	19
1.925	24	56	40	86	15
1.926	32	72	44	100	10
1.927	28	72	44	86	14½
1.928	28	64	44	86	30½
1.929	24	56	40	86	14½
1.930	24	56	40	86	14½
1.931	28	72	44	86	14
1.932	32	64	40	100	15
1.933	48	56	24	100	20
1.934	24	56	40	86	14
1.935	28	72	44	86	13½
1.936	32	64	40	100	14½
1.937	28	64	48	86	37½
1.938	24	56	40	86	13½
1.939	28	72	44	86	13
1.940	28	64	48	100	22½
1.941	32	64	40	100	14
1.942	24	56	40	86	13
1.943	28	72	44	86	12½
1.944	32	56	40	86	43
1.945	48	56	24	100	19
1.946	28	72	44	86	12
1.947	28	72	44	86	12
1.948	32	72	40	86	19½
1.949	24	56	40	86	12

LEAD.	GEAR ON WORM.	1ST. INTERMEDIATE.	2ND. INTERMEDIATE.	GEAR ON SCREW.	ANGLE.
1.950	28	72	44	86	11½
1.951	24	44	32	86	16
1.952	40	86	44	100	17½
1.953	28	72	44	86	11
1.954	24	64	48	86	21
1.955	32	72	48	86	38
1.956	32	72	48	100	23½
1.957	24	64	40	72	20
1.958	40	86	44	100	17
1.959	28	72	48	86	25½
1.960	28	72	44	86	10
1.961	24	44	32	86	15
1.962	48	56	24	100	17½
1.963	24	56	40	86	10
1.964	24	64	40	72	19½
1.965	24	44	32	86	14½
1.966	28	64	40	86	15
1.967	32	64	40	100	10½
1.968	40	86	44	100	16
1.969	24	64	40	72	19
1.970	32	64	40	100	10
1.971	32	72	40	86	17½
1.972	48	56	24	100	16½
1.973	40	86	44	100	15½
1.974	24	44	32	86	13½
1.975	28	64	40	86	14
1.976	28	64	44	86	28
1.977	40	86	44	100	15
1.978	24	44	32	86	13
1.979	28	64	40	86	13½
1.980	28	64	48	100	19½
1.981	24	64	40	72	18
1.982	24	44	32	86	12½
1.983	28	64	40	86	13
1.984	28	48	40	86	43
1.985	24	64	48	86	18½
1.986	24	44	32	86	12
1.987	28	64	40	86	12½
1.988	28	56	32	72	26½
1.989	24	44	32	86	11½
1.990	28	64	40	86	12
1.991	28	64	40	86	12
1.992	48	56	24	100	14½
1.993	24	44	32	86	11
1.994	28	64	40	86	11½
1.995	40	86	44	100	13
1.996	24	44	32	86	10½
1.997	32	72	40	86	15
1.998	28	64	40	86	11
1.999	24	44	32	86	10
2.000	48	56	24	100	13½
2.001	28	64	40	86	10½
2.002	40	86	44	100	12
2.003	28	64	44	86	26½
2.004	28	64	40	86	10
2.005	28	100	56	72	23
2.006	40	86	44	100	11½
2.007	40	86	48	100	26
2.008	48	56	24	100	12½
2.009	40	86	44	100	11
2.010	32	72	40	86	13½
2.011	32	72	48	100	19½
2.012	48	56	24	100	12
2.013	40	86	44	100	10½
2.014	32	72	40	86	13
2.015	40	86	48	100	25½
2.016	40	86	44	100	10
2.017	24	64	40	72	14½
2.018	32	72	40	86	12½
2.019	48	56	24	100	11
2.020	28	72	48	86	21½
2.021	24	64	40	72	14
2.022	32	72	40	86	12
2.023	48	56	24	100	10½
2.024	28	64	48	100	15½
2.025	32	72	40	86	11½
2.026	48	56	24	100	10
2.027	28	100	56	72	21½
2.028	28	64	48	100	15
2.029	32	72	40	86	11
2.030	24	64	40	72	13
2.031	24	64	48	86	14
2.032	32	72	40	86	10½
2.033	28	64	48	100	14½
2.034	24	64	40	72	12½
2.035	24	64	48	86	13½
2.036	32	72	40	86	10
2.037	24	64	40	72	12
2.038	28	64	48	100	14
2.039	24	64	48	86	13
2.040	32	72	48	100	17
2.041	24	64	40	72	11½
2.042	28	64	48	100	13½
2.043	24	64	48	86	12½
2.044	40	44	24	100	20½
2.045	24	64	40	72	11
2.046	28	64	48	100	13
2.047	24	64	48	86	12
2.048	24	64	40	72	10½
2.049	28	64	56	86	44
2.050	28	64	48	100	12½
2.051	24	64	40	72	10
2.052	28	64	44	86	23½
2.053	28	72	48	86	19
2.054	28	64	48	100	12
2.055	24	64	48	86	11
2.056	40	86	48	100	23
2.057	40	44	24	100	19½
2.058	24	64	48	86	10½
2.059	28	72	48	86	18½
2.060	32	72	48	100	15
2.061	24	64	48	86	10
2.062	24	56	40	72	30
2.063	40	44	24	100	19
2.064	44	48	28	100	36½
2.065	28	64	48	100	10½
2.066	32	56	40	86	39
2.067	32	64	44	100	20
2.068	28	64	48	100	10
2.069	40	44	24	100	18½
2.070	32	72	48	100	14
2.071	28	72	48	86	17½
2.072	32	56	40	100	25
2.073	28	64	40	72	31½
2.074	32	72	48	100	13½
2.075	40	44	24	100	18
2.076	28	72	48	86	17
2.077	28	100	56	72	17½
2.078	32	72	48	100	13
2.079	40	72	44	86	43
2.080	32	64	44	100	19
2.081	40	44	24	100	17½
2.082	32	72	48	100	12½
2.083	28	100	56	72	17
2.084	28	64	40	72	31
2.085	24	64	48	72	33½
2.086	32	72	48	100	12
2.087	28	72	48	86	16
2.088	28	100	56	72	16½
2.089	28	64	44	86	21
2.090	32	72	48	100	11½
2.091	28	44	32	86	28
2.092	28	72	48	86	15½
2.093	32	72	44	86	23
2.094	32	72	48	100	11
2.095	28	56	32	72	19½
2.096	28	64	44	86	20½
2.097	32	72	48	100	10½
2.098	32	64	44	100	17½
2.099	28	100	56	72	15½

LEAD.	GEAR ON WORM.	1ST. INTERMEDIATE.	2ND. INTERMEDIATE.	GEAR ON SCREW.	ANGLE.	LEAD.	GEAR ON WORM.	1ST. INTERMEDIATE.	2ND. INTERMEDIATE.	GEAR ON SCREW.	ANGLE.	LEAD.	GEAR ON WORM.	1ST. INTERMEDIATE.	2ND. INTERMEDIATE.	GEAR ON SCREW.	ANGLE.
2.100	28	44	32	86	27½	2.150	32	72	44	86	19	2.200	24	56	40	72	22½
2.101	32	72	48	100	10	2.151	28	56	32	72	14½	2.201	28	64	44	86	10½
2.102	28	72	48	86	14½	2.152	32	64	44	100	12	2.202	32	72	44	86	14½
2.103	40	44	24	100	15½	2.153	56	64	28	100	28½	2.203	32	56	40	100	15½
2.104	28	100	56	72	15	2.154	24	64	44	72	20	2.204	28	64	44	86	10
2.105	40	86	48	100	19½	2.155	44	56	32	100	31	2.205	48	56	32	100	36½
2.106	28	72	48	86	14	2.156	32	64	44	100	11½	2.206	32	72	44	86	14
2.107	28	72	48	86	14	2.157	40	86	48	100	15	2.207	44	86	48	100	26
2.108	40	44	24	100	15	2.158	24	56	40	72	25	2.208	32	56	40	100	15
2.109	28	100	56	72	14½	2.159	28	72	56	86	31½	2.209	24	64	44	72	15½
2.110	28	64	44	86	19½	2.160	32	64	44	100	11	2.210	48	100	56	86	45
2.111	28	72	48	86	13½	2.161	28	56	32	72	13½	2.211	32	72	44	86	13½
2.112	40	44	24	100	14½	2.162	40	86	48	100	14½	2.212	32	64	40	86	18
2.113	28	100	56	72	14	2.163	32	64	44	100	10½	2.213	32	56	40	100	14½
2.114	28	56	32	72	18	2.164	32	64	40	86	21½	2.214	24	64	44	72	15
2.115	28	72	48	86	13	2.165	28	56	32	72	13	2.215	24	56	40	72	21½
2.116	28	64	44	86	19	2.166	32	64	48	100	25½	2.216	32	72	44	86	13
2.117	40	44	24	100	14	2.167	32	64	44	100	10	2.217	28	44	40	86	41½
2.118	28	100	56	72	13½	2.168	32	56	40	100	18½	2.218	32	56	40	100	14
2.119	28	56	32	72	17½	2.169	28	56	32	72	12½	2.219	24	64	44	72	14½
2.120	28	72	48	86	12½	2.170	32	72	48	86	29	2.220	32	72	44	86	12½
2.121	24	56	40	72	27	2.171	24	44	48	86	44½	2.221	28	64	40	72	24
2.122	28	100	56	72	13	2.172	28	64	44	86	14	2.222	28	64	48	86	24½
2.123	32	72	44	86	21	2.173	28	56	32	72	12	2.223	32	56	40	100	13½
2.124	28	72	48	86	12	2.174	32	56	40	100	18	2.224	32	72	44	86	12
2.125	32	64	44	100	15	2.175	32	72	44	86	17	2.225	28	44	32	86	20
2.126	28	100	56	72	12½	2.176	56	64	32	100	39	2.226	44	86	48	100	25
2.127	28	72	48	86	11½	2.177	28	56	32	72	11½	2.227	32	56	40	100	13
2.128	28	64	44	86	18	2.178	40	72	44	100	27	2.228	32	72	44	86	11½
2.129	32	64	48	100	27½	2.179	44	86	48	100	27½	2.229	24	64	44	72	13½
2.130	28	100	56	72	12	2.180	40	86	48	100	12½	2.230	32	64	40	86	16½
2.131	28	72	48	86	11	2.181	28	56	32	72	11	2.231	28	64	48	86	24
2.132	24	64	44	72	21½	2.182	28	72	56	86	30½	2.232	32	72	44	86	11.
2.133	24	64	44	72	21½	2.183	56	64	28	100	27	2.233	24	64	44	72	13
2.134	28	100	56	72	11½	2.184	24	56	44	72	33½	2.234	44	48	28	100	29½
2.135	28	72	48	86	10½	2.185	28	56	32	72	10½	2.235	44	86	48	100	24½
2.136	28	56	32	72	16	2.186	32	72	44	86	16	2.236	32	72	44	86	10½
2.137	32	72	44	86	20	2.187	40	72	44	100	26½	2.237	24	56	40	72	20
2.138	28	72	48	86	10	2.188	28	56	32	72	10	2.238	24	64	44	72	12½
2.139	32	64	44	100	13½	2.189	28	64	44	86	12	2.239	32	72	44	86	10
2.140	24	56	40	72	26	2.190	32	56	40	86	34½	2.240	32	56	40	100	11½
2.141	28	56	32	72	15½	2.191	48	100	56	86	45½	2.241	32	64	40	86	15½
2.142	28	100	56	72	10½	2.192	40	86	48	100	11	2.242	24	64	44	72	12
2.143	56	64	28	100	29	2.193	28	64	44	86	11½	2.243	28	64	44	72	33
2.144	40	72	48	100	36½	2.194	28	64	40	72	25½	2.244	32	56	40	100	11
2.145	28	100	56	72	10	2.195	28	64	48	86	26	2.245	28	64	56	86	38
2.146	28	56	32	72	15	2.196	40	86	48	100	10½	2.246	24	64	44	72	11½
2.147	40	86	48	100	16	2.197	28	64	44	86	11	2.247	32	64	40	86	15
2.148	44	86	48	100	29	2.198	44	86	48	100	26½	2.248	32	56	40	100	10½
2.149	40	44	24	100	10	2.199	40	86	48	100	10	2.249	32	72	48	86	25

LEAD.	GEAR ON WORM.	1ST. INTERMEDIATE.	2ND. INTERMEDIATE.	GEAR ON SCREW.	ANGLE.	LEAD.	GEAR ON WORM.	1ST. INTERMEDIATE.	2ND. INTERMEDIATE.	GEAR ON SCREW.	ANGLE.	LEAD.	GEAR ON WORM.	1ST. INTERMEDIATE.	2ND. INTERMEDIATE.	GEAR ON SCREW.	ANGLE.
2.250	24	64	44	72	11	2.300	24	56	40	72	15	2.350	28	64	44	72	28½
2.251	32	56	40	100	10	2.301	32	64	48	100	16½	2.351	28	48	40	72	43½
2.252	32	64	40	86	14½	2.302	28	64	48	86	19½	2.352	32	64	48	100	11½
2.253	40	64	44	100	35	2.303	28	44	32	86	13½	2.353	32	72	48	86	12½
2.254	24	64	44	72	10½	2.304	28	72	56	86	24½	2.354	28	64	40	72	14½
2.255	32	64	48	100	20	2.305	24	56	40	72	14½	2.355	44	86	48	100	16½
2.256	28	64	48	86	22½	2.306	44	56	32	100	23½	2.356	32	64	48	100	11
2.257	24	64	44	72	10	2.307	28	44	32	86	13	2.357	24	64	48	72	19½
2.258	28	44	32	86	17½	2.308	44	86	48	100	20	2.358	32	56	40	86	27½
2.259	32	64	44	86	28	2.309	28	64	48	86	19	2.359	28	64	40	72	14
2.260	44	56	32	100	26	2.310	24	56	40	72	14	2.360	32	64	48	100	10½
2.261	44	86	48	100	23	2.311	40	72	44	100	19	2.361	40	72	44	100	15
2.262	32	64	40	86	13½	2.312	28	44	32	86	12½	2.362	44	56	32	100	20
2.263	44	72	48	100	39½	2.313	32	64	48	100	15½	2.363	32	64	44	86	23
2.264	40	64	48	100	41	2.314	44	56	32	100	23	2.364	32	64	48	100	10
2.265	28	44	32	86	17	2.315	24	56	40	72	13½	2.365	24	56	48	86	8½
2.266	32	64	40	86	13	2.316	28	44	32	86	12	2.366	40	72	44	100	14½
2.267	28	40	32	86	29½	2.317	24	40	44	86	41	2.367	56	64	28	100	15
2.268	40	72	48	86	43	2.318	32	64	48	100	15	2.368	24	44	40	86	21
2.269	32	64	48	100	19	2.319	28	48	44	86	39	2.369	28	64	40	72	13
2.270	28	44	32	86	16½	2.320	28	44	32	86	11½	2.370	44	56	32	100	19½
2.271	32	64	40	86	12½	2.321	28	40	32	86	27	2.371	40	72	44	100	14
2.272	28	64	48	86	21½	2.322	28	72	56	86	23½	2.372	56	64	28	100	14½
2.273	44	100	56	86	37½	2.323	48	100	56	86	42	2.373	28	64	40	72	12½
2.274	48	56	32	100	34	2.324	32	64	48	100	14½	2.374	32	100	56	72	17½
2.275	32	64	40	86	12	2.325	28	44	32	86	11	2.375	28	64	48	86	13½
2.276	28	44	32	86	16	2.326	24	64	48	72	21½	2.376	40	72	44	100	13½
2.277	24	56	40	72	17	2.327	24	44	40	86	25½	2.377	56	64	28	100	14
2.278	44	56	32	100	25	2.328	28	44	32	86	10½	2.378	28	64	40	72	12
2.279	32	64	40	86	11½	2.329	24	56	40	72	12	2.379	28	64	48	86	13
2.280	28	64	44	72	31½	2.330	40	100	56	72	41½	2.380	32	100	56	72	17
2.281	40	64	44	86	44½	2.331	28	64	40	72	16½	2.381	40	72	44	100	13
2.282	28	44	32	86	15½	2.332	28	44	32	86	10	2.382	28	64	40	72	11½
2.283	32	64	40	86	11	2.333	24	56	40	72	11½	2.383	44	86	48	100	14
2.284	28	64	40	72	20	2.334	24	64	48	72	21	2.384	28	64	48	86	12½
2.285	44	86	48	100	21½	2.335	28	64	48	86	17	2.385	32	72	56	86	34½
2.286	28	64	44	72	31	2.336	44	86	48	100	18	2.386	28	64	40	72	11
2.287	32	64	40	86	10½	2.337	24	56	40	72	11	2.387	56	64	28	100	13
2.288	44	56	32	100	24½	2.338	32	64	48	100	13	2.388	44	86	48	100	13½
2.289	24	56	40	72	16	2.339	40	64	44	86	43	2.389	28	64	48	86	12
2.290	24	44	40	86	25½	2.340	24	56	48	72	35	2.390	28	64	40	72	10½
2.291	32	64	40	86	10	2.341	24	56	40	72	10½	2.391	40	72	44	100	12
2.292	28	64	40	72	19½	2.342	32	64	56	86	44	2.392	56	64	28	100	12½
2.293	28	44	32	86	14½	2.343	56	64	28	100	17	2.393	28	64	48	86	11½
2.294	24	56	40	72	13½	2.344	24	56	44	72	26½	2.394	28	64	40	72	10
2.295	32	64	48	100	17	2.345	24	56	40	72	10	2.395	40	72	44	100	11½
2.296	32	72	56	86	37½	2.346	32	72	48	86	19	2.396	56	64	28	100	12
2.297	40	72	44	100	20	2.347	44	56	32	100	21	2.397	28	64	48	86	11
2.298	28	44	32	86	14	2.348	32	64	48	100	12	2.398	44	86	48	100	12½
2.299	28	64	40	72	19	2.349	40	72	44	100	16	2.399	40	72	44	100	11

LEAD.	GEAR ON WORM.	1ST. INTERMEDIATE.	2ND. INTERMEDIATE.	GEAR ON SCREW.	ANGLE.	LEAD.	GEAR ON WORM.	1ST. INTERMEDIATE.	2ND. INTERMEDIATE.	GEAR ON SCREW.	ANGLE.	LEAD.	GEAR ON WORM.	1ST. INTERMEDIATE.	2ND. INTERMEDIATE.	GEAR ON SCREW.	ANGLE.
2.400	56	64	32	100	31	2.450	24	64	48	72	11½	2.500	28	64	48	72	31
2.401	28	64	48	86	10½	2.451	32	100	56	72	10	2.501	44	48	28	100	13
2.402	44	86	48	100	12	2.452	28	64	44	72	23½	2.502	32	64	44	86	12
2.403	40	72	44	100	10½	2.453	32	64	44	86	16½	2.503	28	48	44	86	33
2.404	32	100	56	72	15	2.454	24	64	48	72	11	2.504	28	40	32	86	16
2.405	28	64	48	86	10	2.455	40	72	48	100	23	2.505	24	56	44	72	17
2.406	24	44	40	86	18½	2.456	24	44	40	86	14½	2.506	44	48	28	100	12½
2.407	40	72	44	100	10	2.457	28	72	56	86	14	2.507	32	64	44	86	11½
2.408	28	72	56	86	18	2.458	24	64	48	72	10½	2.508	32	64	48	86	26
2.409	56	64	28	100	10½	2.459	44	56	32	100	12	2.509	32	64	48	86	26
2.410	32	100	56	72	14½	2.460	28	64	48	72	32½	2.510	28	40	44	86	45½
2.411	44	86	48	100	11	2.461	44	48	28	100	16½	2.511	28	44	48	86	45
2.412	32	72	48	86	13½	2.462	24	64	48	72	10	2.512	32	56	44	72	44
2.413	56	64	28	100	10	2.463	28	40	32	86	19	2.513	32	56	40	86	19
2.414	28	64	44	72	25½	2.464	44	56	32	100	11½	2.514	40	72	48	100	19½
2.415	44	86	48	100	10½	2.465	32	64	44	86	15½	2.515	32	64	44	86	10½
2.416	28	64	56	86	32	2.466	32	56	44	86	32½	2.516	44	48	28	100	11½
2.417	32	72	48	86	13	2.467	28	72	56	86	13	2.517	56	64	32	100	26
2.418	32	64	40	72	29½	2.468	44	56	32	100	11	2.518	24	56	44	72	16
2.419	44	86	48	100	10	2.469	24	56	44	72	19½	2.519	32	64	44	86	10
2.420	32	100	56	72	13½	2.470	28	40	32	86	18½	2.520	44	48	28	100	11
2.421	28	72	56	86	17	2.471	32	64	44	86	15	2.521	28	48	44	72	45
2.422	32	72	48	86	12½	2.472	44	56	32	100	10½	2.522	28	40	32	86	14½
2.423	44	56	32	100	15½	2.473	32	56	40	86	21½	2.523	24	56	48	72	28
2.424	28	40	32	86	21½	2.474	44	48	28	100	15½	2.524	44	48	28	100	10½
2.425	32	100	56	72	13	2.475	32	64	40	72	27	2.525	48	56	32	100	23
2.426	24	64	48	72	14	2.476	44	56	32	100	10	2.526	28	64	48	72	30
2.427	32	72	48	86	12	2.477	28	72	56	86	12	2.527	56	64	32	100	25½
2.428	44	56	32	100	15	2.478	28	40	32	86	18	2.528	44	48	28	100	10
2.429	32	64	48	86	29½	2.479	44	48	28	100	13	2.529	40	72	48	100	18½
2.430	32	100	56	72	12½	2.480	44	48	28	100	15	2.530	24	56	44	72	15
2.431	32	72	48	86	11½	2.481	28	72	56	86	11½	2.531	40	64	44	100	23
2.432	28	40	32	86	21	2.482	24	44	40	86	12	2.532	28	40	44	86	45
2.433	44	64	48	100	42½	2.483	28	48	40	72	40	2.533	28	44	48	86	44½
2.434	28	72	56	86	16	2.484	28	40	32	86	17½	2.534	48	56	32	100	22½
2.435	32	72	48	86	11	2.485	28	72	56	86	11	2.535	32	56	40	86	17½
2.436	24	64	48	72	13	2.486	48	56	32	100	25	2.536	40	72	56	86	45½
2.437	24	56	44	72	21½	2.487	32	64	44	86	13½	2.537	40	72	48	100	18
2.438	32	56	40	86	23½	2.488	28	64	44	72	21½	2.538	28	40	32	86	13
2.439	32	72	48	86	10½	2.489	44	40	32	100	45	2.539	28	64	56	86	27
2.440	32	72	48	86	10½	2.490	28	72	56	86	10½	2.540	32	64	48	86	24½
2.441	24	64	48	72	12½	2.491	44	48	28	100	14	2.541	24	56	44	72	14
2.442	28	64	56	86	31	2.492	32	64	44	86	13	2.542	32	56	40	86	17
2.443	32	72	48	86	10	2.493	28	72	56	86	10	2.543	28	64	44	72	18
2.444	48	56	32	100	27	2.494	28	72	56	86	10	2.544	40	72	48	100	17½
2.445	44	56	32	100	13½	2.495	24	44	40	86	10½	2.545	32	56	44	86	29½
2.446	24	64	48	72	12	2.496	44	48	28	100	13½	2.546	24	56	48	72	27
2.447	32	100	56	72	10½	2.497	32	64	44	86	12½	2.547	24	56	44	72	13½
2.448	44	48	28	100	17½	2.498	24	44	40	86	10	2.548	24	44	48	72	45½
2.449	56	64	32	100	29	2.499	24	56	48	72	29	2.549	24	44	48	72	45½

LEAD.	GEAR ON WORM.	1ST. INTERMEDIATE.	2ND. INTERMEDIATE.	GEAR ON SCREW.	ANGLE.	LEAD.	GEAR ON WORM.	1ST. INTERMEDIATE.	2ND. INTERMEDIATE.	GEAR ON SCREW.	ANGLE.	LEAD.	GEAR ON WORM.	1ST. INTERMEDIATE.	2ND. INTERMEDIATE.	GEAR ON SCREW.	ANGLE.
2.550	28	64	44	72	17½	2.600	32	56	40	86	12	2.650	40	56	44	86	43½
2.551	40	72	48	100	17	2.601	28	48	40	86	16½	2.651	40	56	44	86	43½
2.552	24	56	44	72	13	2.602	32	64	40	72	20½	2.652	48	64	28	56	45
2.553	44	40	32	100	43½	2.603	40	72	56	86	44	2.653	40	72	44	86	21
2.554	28	40	44	86	44½	2.604	40	72	48	100	12½	2.654	28	56	64	86	44½
2.555	32	56	40	86	16	2.605	32	56	40	86	11½	2.655	56	64	32	100	18½
2.556	40	72	48	86	34½	2.606	40	56	44	86	44½	2.656	48	56	32	100	14½
2.557	28	40	32	86	11	2.607	28	48	44	72	45	2.657	44	40	32	100	41
2.558	40	72	56	86	45	2.608	28	56	64	86	45½	2.658	28	48	40	86	11½
2.559	40	64	44	100	21½	2.609	32	56	40	86	11	2.659	24	44	48	72	45
2.560	32	64	48	86	23½	2.610	32	64	40	72	20	2.660	44	48	40	100	43½
2.561	28	40	32	86	10½	2.611	28	64	44	72	12½	2.661	28	40	44	86	42
2.562	24	56	44	72	12	2.612	40	64	48	86	41½	2.662	48	56	32	100	14
2.563	28	64	48	72	28½	2.613	32	56	40	86	10½	2.663	48	100	56	72	44½
2.564	28	48	44	72	44	2.614	32	56	40	86	10½	2.664	32	48	40	72	44
2.565	28	40	32	86	10	2.615	44	48	40	100	44½	2.665	28	64	48	72	24
2.566	24	56	44	72	11½	2.616	48	100	56	72	45½	2.666	44	100	56	86	21½
2.567	32	56	40	86	15	2.617	48	100	56	72	45½	2.667	40	72	56	86	42½
2.568	40	56	48	100	41½	2.618	28	44	48	86	42½	2.668	28	48	40	86	10½
2.569	48	56	32	100	20½	2.619	32	48	40	72	45	2.669	32	64	48	86	17
2.570	44	48	40	100	45½	2.620	28	64	44	72	11½	2.670	28	48	44	72	41½
2.571	24	44	48	72	45	2.621	28	48	40	86	15	2.671	40	72	44	86	20
2.572	28	64	56	86	25½	2.622	40	72	48	100	10½	2.672	40	56	44	86	43
2.573	32	56	40	86	14½	2.623	48	56	32	100	17	2.673	48	56	32	100	13
2.574	44	40	32	100	43	2.624	40	72	56	86	43½	2.674	40	64	44	100	13½
2.575	24	56	44	72	10½	2.625	44	56	24	64	27	2.675	48	64	28	56	44½
2.576	28	40	44	86	44	2.626	40	72	48	100	10	2.676	32	64	48	86	16½
2.577	28	64	44	72	15½	2.627	40	72	48	100	10	2.677	28	56	64	86	44
2.578	48	56	32	100	20	2.628	40	56	44	86	44	2.678	48	56	32	100	12½
2.579	24	56	44	72	10	2.629	28	64	44	72	10½	2.679	40	64	44	100	13
2.580	40	72	56	86	44½	2.630	48	56	32	100	16½	2.680	28	44	48	86	41
2.581	24	44	48	86	32	2.631	28	56	64	86	45	2.681	24	44	48	72	42½
2.582	40	72	48	100	14½	2.632	28	48	40	86	14	2.682	44	48	40	100	43
2.583	28	64	44	72	15	2.633	28	64	44	72	10	2.683	48	56	32	100	12
2.584	32	56	40	86	13½	2.634	32	64	40	72	18½	2.684	44	100	56	86	20½
2.585	32	56	40	86	13½	2.635	40	72	44	86	22	2.685	48	100	56	72	44
2.586	28	48	44	72	43½	2.636	44	40	32	100	41½	2.686	28	64	56	86	19½
2.587	28	48	40	86	17½	2.637	24	44	48	72	43½	2.687	32	48	40	72	43½
2.588	40	72	48	100	14	2.638	44	48	40	100	44	2.688	48	56	32	100	11½
2.589	28	64	44	72	14½	2.639	28	44	48	86	42	2.689	40	72	56	86	42
2.590	32	56	40	86	13	2.640	48	100	56	72	45	2.690	40	64	44	100	12
2.591	48	100	56	86	34	2.641	40	100	56	64	41	2.691	28	48	44	72	41
2.592	40	64	44	100	19½	2.642	32	48	40	72	44½	2.692	40	64	48	86	39½
2.593	44	48	40	100	45	2.643	28	48	40	86	13	2.693	48	56	32	100	11
2.594	28	64	44	72	14	2.644	32	72	56	86	24	2.694	40	56	44	86	42½
2.595	44	40	32	100	42½	2.645	24	40	44	86	30½	2.695	40	64	44	100	11½
2.596	32	48	40	72	45½	2.646	40	72	56	86	43	2.696	44	40	32	100	40
2.597	28	40	44	86	43½	2.647	32	64	48	86	18½	2.697	48	64	28	56	44
2.598	28	40	44	86	43½	2.648	56	64	32	100	19	2.698	48	64	28	56	44
2.599	40	72	48	100	13	2.649	28	48	44	72	42	2.699	28	56	64	86	43½

LEAD.	GEAR ON WORM.	1ST. INTERMEDIATE.	2ND. INTERMEDIATE.	GEAR ON SCREW.	ANGLE.
2.700	28	44	48	86	40½
2.701	48	56	32	100	10
2.702	24	44	48	72	42
2.703	28	40	44	86	41
2.704	44	48	40	100	42½
2.705	56	64	32	100	15
2.706	48	40	24	100	20
2.707	32	64	40	72	13
2.708	48	100	56	72	43½
2.709	32	48	40	72	43
2.710	40	72	56	86	41½
2.711	28	48	44	72	40½
2.712	32	64	40	72	12½
2.713	32	64	48	72	35½
2.714	32	64	48	86	13½
2.715	40	56	44	86	42
2.716	44	40	32	100	39½
2.717	32	64	40	72	12
2.718	40	72	44	86	17
2.719	32	64	48	86	13
2.720	48	64	28	56	43½
2.721	28	56	64	86	43
2.722	32	64	40	72	11½
2.723	24	44	48	72	41½
2.724	28	64	56	86	17
2.725	44	48	40	100	42
2.726	28	48	44	86	24
2.727	32	64	40	72	11
2.728	56	64	32	100	13
2.729	44	72	48	100	21½
2.730	48	100	56	72	43
2.731	32	48	40	72	42½
2.732	32	64	40	72	10½
2.733	32	56	44	72	38½
2.734	56	64	32	100	12½
2.735	44	40	32	100	39
2.736	44	40	32	100	39
2.737	40	56	44	86	41½
2.738	44	72	48	100	21
2.739	56	64	32	100	12
2.740	28	44	48	86	39½
2.741	28	64	48	72	20
2.742	32	72	64	86	34
2.743	48	64	28	56	43
2.744	24	44	48	72	41
2.745	40	72	44	86	15
2.746	44	48	40	100	41½
2.747	44	100	56	86	16½
2.748	32	56	44	86	20
2.749	32	64	48	86	10
2.750	28	64	48	72	19½
2.751	40	72	56	86	40½
2.752	48	100	56	72	42½
2.753	32	48	40	72	42
2.754	44	100	56	86	16
2.755	44	40	32	100	38½
2.756	32	56	44	86	19½
2.757	56	64	32	100	10
2.758	40	56	44	86	41
2.759	44	56	24	64	20½
2.760	28	44	48	86	39
2.761	44	100	56	86	15½
2.762	40	64	48	100	23
2.763	28	40	44	86	39½
2.764	28	64	56	86	14
2.765	48	64	28	56	42½
2.766	24	56	48	72	14½
2.767	44	48	40	100	41
2.768	44	48	40	100	41
2.769	40	72	44	86	13
2.770	28	48	44	72	39
2.771	28	48	44	72	39
2.772	40	72	56	86	40
2.773	32	56	44	86	18½
2.774	48	100	56	72	42
2.775	40	72	44	86	12½
2.776	28	64	56	86	13
2.777	44	56	24	64	19½
2.778	24	56	48	72	13½
2.779	40	56	44	86	40½
2.780	40	72	44	86	12
2.781	28	64	56	86	12½
2.782	48	40	24	100	15
2.783	28	40	44	86	39
2.784	24	56	48	72	13
2.785	24	44	48	72	40
2.786	40	64	48	86	37
2.787	48	64	28	56	42
2.788	44	48	40	100	40½
2.789	32	56	44	72	37
2.790	28	48	44	72	38½
2.791	40	64	48	100	21½
2.792	40	72	56	86	39½
2.793	44	40	32	100	37½
2.794	40	72	44	86	10½
2.795	32	48	40	72	41
2.796	48	100	56	72	41½
2.797	28	64	56	86	11
2.798	28	44	48	86	38
2.799	40	56	44	86	40
2.800	24	56	48	72	11½
2.801	28	64	56	86	10½
2.802	28	40	44	86	38½
2.803	32	64	44	72	23½
2.804	40	64	48	86	36½
2.805	24	56	48	72	11
2.806	24	44	48	72	39½
2.807	32	56	44	72	36½
2.808	28	56	64	86	41
2.809	48	64	28	56	41½
2.810	44	56	24	64	17½
2.811	44	40	32	100	37
2.812	40	72	56	86	39
2.813	40	100	56	64	36½
2.814	32	72	56	86	13½
2.815	28	44	40	86	18
2.816	32	56	48	86	28
2.817	48	100	56	72	41
2.818	48	40	28	100	33
2.819	44	72	48	100	16
2.820	40	56	44	86	39½
2.821	44	100	56	86	10
2.822	28	40	44	86	38
2.823	28	44	40	86	17½
2.824	28	64	48	72	14½
2.825	32	56	44	72	36
2.826	24	44	48	72	39
2.827	48	40	24	100	11
2.828	28	48	44	72	37½
2.829	28	56	64	86	40½
2.830	48	64	28	56	41
2.831	40	72	56	86	38½
2.832	40	72	56	86	38½
2.833	44	72	48	100	15
2.834	32	64	44	72	22
2.835	28	48	40	72	29
2.836	28	44	48	86	37
2.837	32	48	40	72	40
2.838	28	44	40	86	16½
2.839	48	100	56	72	40½
2.840	40	56	44	86	39
2.841	28	40	44	86	37½
2.842	28	64	48	72	13
2.843	32	56	44	72	35½
2.844	40	72	48	86	23½
2.845	28	44	40	86	16
2.846	24	44	48	72	38½
2.847	28	48	44	72	37
2.848	44	40	32	100	36
2.849	40	100	56	64	35½

LEAD.	GEAR ON WORM.	1ST. INTERMEDIATE.	2ND. INTERMEDIATE.	GEAR ON SCREW.	ANGLE.
2.850	28	56	64	86	40
2.851	48	64	28	56	40½
2.852	48	64	28	56	40½
2.853	28	64	48	72	12
2.854	28	44	48	86	36½
2.855	28	44	48	86	36½
2.856	24	40	44	86	21½
2.857	40	64	48	86	35
2.858	32	48	40	72	39½
2.859	28	44	40	86	15
2.860	40	56	44	86	38½
2.861	28	48	44	86	16½
2.862	32	64	44	72	20½
2.863	28	64	48	72	11
2.864	28	64	48	72	11
2.865	24	44	48	72	38
2.866	28	48	44	72	36½
2.867	40	100	56	64	35
2.868	28	64	48	72	10½
2.869	44	72	48	100	12
2.870	44	48	40	100	38½
2.871	28	56	64	86	39½
2.872	28	44	40	86	14
2.873	48	64	28	56	40
2.874	44	72	48	100	11½
2.875	40	64	48	86	34½
2.876	44	56	24	64	12½
2.877	40	64	48	100	16½
2.878	40	64	56	86	45
2.879	40	56	44	86	38
2.880	48	100	56	72	39½
2.881	48	100	56	72	39½
2.882	44	56	24	64	12
2.883	44	40	32	100	35
2.884	28	48	44	72	36
2.885	24	44	48	72	37½
2.886	40	64	44	86	25½
2.887	44	56	24	64	11½
2.888	44	72	48	100	10
2.889	40	72	56	86	37
2.890	44	48	40	100	38
2.891	28	44	48	86	35½
2.892	28	56	64	86	39
2.893	40	56	44	100	23
2.894	48	64	28	56	39½
2.895	32	56	44	72	34
2.896	44	64	48	86	41
2.897	28	40	44	86	36
2.898	40	64	48	100	15
2.899	40	56	44	86	37½
2.900	28	44	40	86	11½
2.901	48	100	56	72	39
2.902	28	48	44	72	35½
2.903	24	44	48	86	17½
2.904	24	44	48	72	37
2.905	40	72	48	86	20½
2.906	28	44	40	86	11
2.907	28	48	44	86	13
2.908	40	72	56	86	36½
2.909	44	48	40	100	37½
2.910	28	44	40	86	10½
2.911	40	64	48	100	14
2.912	28	56	64	86	38½
2.913	28	48	44	86	12½
2.914	48	64	28	56	39
2.915	28	40	44	86	35½
2.916	44	72	48	100	6
2.917	40	64	48	100	13½
2.918	40	56	44	86	37
2.919	32	48	40	72	38
2.920	28	48	44	72	35
2.921	48	100	56	72	38½
2.922	48	100	56	72	38½
2.923	24	44	48	72	36½
2.924	28	48	44	86	11½
2.925	40	64	48	86	33
2.926	28	44	48	86	34½
2.927	40	72	56	86	36
2.928	24	40	44	86	17½
2.929	44	48	40	100	37
2.930	32	64	44	72	16½
2.931	44	56	48	100	39
2.932	28	56	64	86	38
2.933	28	40	44	86	35
2.934	28	48	44	86	10½
2.935	48	64	28	56	38½
2.936	24	40	44	86	17
2.937	40	56	44	86	36½
2.938	28	48	44	72	34½
2.939	32	48	40	72	37½
2.940	40	64	48	100	11½
2.941	24	44	48	72	36
2.942	48	100	56	72	38
2.943	32	64	48	72	28
2.944	28	44	48	86	34
2.945	40	72	56	86	35½
2.946	40	72	56	86	35½
2.947	24	44	48	86	14½
2.948	44	48	40	100	36½
2.949	40	72	48	86	18
2.950	40	64	48	100	10½
2.951	28	40	44	86	34½
2.952	28	56	64	86	37½
2.953	24	44	48	86	14
2.954	40	64	48	100	10
2.955	48	64	28	56	38
2.956	40	56	44	86	36
2.957	40	72	48	86	17½
2.958	32	48	40	72	37
2.959	32	64	44	72	14½
2.960	24	44	48	72	35½
2.961	28	44	48	86	33½
2.962	48	100	56	72	37½
2.963	40	56	44	100	19½
2.964	40	72	56	86	35
2.965	32	64	44	72	14
2.966	24	44	48	86	13
2.967	44	48	40	100	36
2.968	40	100	56	64	32
2.969	28	40	44	86	34
2.970	32	64	48	72	27
2.971	24	40	48	86	27½
2.972	28	56	64	86	37
2.973	28	48	44	72	33½
2.974	40	64	48	86	31½
2.975	40	56	44	86	35½
2.976	40	64	44	86	21½
2.977	32	56	44	72	31½
2.978	32	48	40	72	36½
2.979	24	40	44	86	14
2.980	48	40	28	100	27½
2.981	48	100	56	72	37
2.982	40	72	56	86	34½
2.983	24	44	48	86	11½
2.984	40	100	56	64	31½
2.985	44	48	40	100	35½
2.986	28	40	44	86	33½
2.987	32	56	48	86	20½
2.988	24	44	48	86	11
2.989	32	64	44	72	12
2.990	28	48	44	72	33
2.991	28	56	64	86	36½
2.992	44	56	48	100	37½
2.993	40	56	44	86	35
2.994	28	48	40	72	22½
2.995	48	64	28	56	37
2.996	24	44	48	72	34½
2.997	32	48	40	72	36
2.998	24	44	48	86	10
2.999	40	56	48	100	29

LEAD.	GEAR ON WORM.	1ST. INTERMEDIATE.	2ND. INTERMEDIATE.	GEAR ON SCREW.	ANGLE.
3.000	40	100	56	64	31
3.001	48	100	56	72	36½
3.002	40	72	48	86	14½
3.003	28	40	44	86	33
3.004	44	48	40	100	35
3.005	40	64	48	86	30½
3.006	56	44	28	86	43½
3.007	28	48	44	72	32½
3.008	24	40	44	86	11½
3.009	32	56	44	72	30½
3.010	28	56	64	86	36
3.011	40	56	44	86	34½
3.012	40	100	56	72	14½
3.013	40	56	44	100	16½
3.014	48	64	28	56	36½
3.015	48	64	28	56	36½
3.016	32	48	40	72	35½
3.017	40	72	56	86	33½
3.018	56	48	28	100	22½
3.019	24	40	44	86	10½
3.020	48	100	56	72	36
3.021	40	64	48	86	30
3.022	44	48	40	100	34½
3.023	28	48	44	72	32
3.024	32	56	44	72	30
3.025	40	100	56	72	13½
3.026	28	48	40	72	21
3.027	40	72	48	86	12½
3.028	28	44	48	86	31½
3.029	40	56	44	86	34
3.030	40	64	44	72	37½
3.031	40	100	56	64	30
3.032	24	44	48	72	33½
3.033	44	40	32	100	30½
3.034	32	48	40	72	35
3.035	24	40	48	86	25
3.036	40	64	48	86	29½
3.037	28	40	44	86	32
3.038	44	64	48	100	23
3.039	48	100	56	72	35½
3.040	44	48	40	100	34
3.041	32	56	48	86	17½
3.042	40	64	44	86	18
3.043	40	100	56	72	12
3.044	28	44	48	86	31
3.045	32	64	48	72	24
3.046	40	100	56	64	29½
3.047	40	56	44	86	33½
3.048	28	56	64	86	35
3.049	24	44	48	72	33
3.050	40	56	44	100	14
3.051	40	72	56	86	32½
3.052	32	48	40	72	34½
3.053	32	48	40	72	34½
3.054	32	56	44	72	29
3.055	56	44	28	86	42½
3.056	28	48	44	72	31
3.057	32	64	48	72	23½
3.058	44	48	40	100	33½
3.059	40	100	56	72	10½
3.060	28	44	48	86	30½
3.061	40	100	56	64	29
3.062	40	56	44	100	13
3.063	48	100	56	86	11½
3.064	40	56	44	86	33
3.065	40	56	44	86	33
3.066	32	44	40	86	25
3.067	28	56	64	86	34½
3.068	40	72	56	86	32
3.069	28	40	44	86	31
3.070	28	40	44	86	31
3.071	32	48	40	72	34
3.072	48	64	28	56	35
3.073	32	56	48	86	15½
3.074	48	100	56	86	10½
3.075	44	48	40	100	35
3.076	48	100	56	72	34½
3.077	28	44	48	72	49½
3.078	48	100	56	86	10
3.079	44	40	32	100	29
3.080	40	64	48	86	28
3.081	32	56	40	72	14
3.082	40	56	44	86	32½
3.083	24	44	48	72	32
3.084	24	44	48	72	32
3.085	28	56	64	86	34
3.086	32	44	48	86	40½
3.087	28	48	44	72	30
3.088	32	64	56	86	18½
3.089	32	48	40	72	33½
3.090	48	64	28	56	34½
3.091	28	44	48	86	29½
3.092	28	48	56	86	35½
3.093	44	48	40	100	32½
3.094	40	64	48	86	27½
3.095	48	100	56	72	34
3.096	40	64	44	86	14½
3.097	32	56	44	72	27½
3.098	56	48	28	100	18½
3.099	40	56	44	86	32
3.100	24	44	48	72	31½
3.101	40	72	56	86	31
3.102	32	44	40	86	23½
3.103	28	56	64	86	33½
3.104	56	44	28	86	41½
3.105	40	100	56	64	27½
3.106	32	48	40	72	33
3.107	32	56	48	86	13
3.108	44	40	32	100	28
3.109	48	64	28	56	34
3.110	44	48	40	100	32
3.111	32	56	44	72	27
3.112	32	64	48	72	21
3.113	48	100	56	72	33½
3.114	32	64	56	86	17
3.115	28	48	40	72	16
3.116	40	56	44	86	31½
3.117	24	44	48	72	31
3.118	28	48	44	72	29
3.119	40	100	56	64	27
3.120	44	64	48	100	19
3.121	28	56	64	86	33
3.122	44	40	32	100	27½
3.123	28	48	40	72	15½
3.124	32	48	40	72	32½
3.125	32	56	44	72	26½
3.126	44	100	56	72	24
3.127	44	48	40	100	31½
3.128	56	44	28	86	41
3.129	44	64	48	100	18½
3.130	32	56	48	86	11
3.131	48	100	56	72	33
3.132	40	56	44	86	31
3.133	24	44	48	72	30½
3.134	40	64	44	86	11½
3.135	28	44	48	86	28
3.136	32	56	48	86	10½
3.137	24	40	48	86	20½
3.138	28	56	64	86	32½
3.139	32	56	44	72	26
3.140	32	56	48	86	10
3.141	32	48	40	72	32
3.142	32	64	48	72	19½
3.143	44	48	40	100	31
3.144	40	64	44	86	10½
3.145	48	64	28	56	33
3.146	40	100	56	64	26
3.147	28	40	44	86	28½
3.148	40	56	44	86	30½
3.149	48	100	56	72	32½

LEAD.	GEAR ON WORM.	1ST. INTERMEDIATE.	2ND. INTERMEDIATE.	GEAR ON SCREW.	ANGLE.	LEAD.	GEAR ON WORM.	1ST. INTERMEDIATE.	2ND. INTERMEDIATE.	GEAR ON SCREW.	ANGLE.	LEAD.	GEAR ON WORM.	1ST. INTERMEDIATE.	2ND. INTERMEDIATE.	GEAR ON SCREW.	ANGLE.
3.150	28	44	48	86	27½	3.200	48	100	56	72	31	3.250	44	64	48	100	10
3.151	56	44	28	86	40½	3.201	32	64	56	86	10½	3.251	48	72	56	86	41½
3.152	32	56	44	72	25½	3.202	32	56	44	72	23½	3.252	40	72	56	86	26
3.153	28	44	48	72	42	3.203	44	40	32	100	24½	3.253	44	48	40	100	27½
3.154	32	72	64	86	17½	3.204	28	48	44	72	26	3.254	28	56	64	86	29
3.155	28	64	56	72	22	3.205	28	40	44	86	26½	3.255	32	48	40	72	28½
3.156	28	56	64	86	32	3.206	28	56	64	86	30½	3.256	40	56	44	86	27
3.157	24	40	48	86	19½	3.207	44	48	40	100	29	3.257	28	48	44	72	24
3.158	32	48	40	72	31½	3.208	32	48	40	72	30	3.258	28	40	48	86	33½
3.159	40	100	56	64	25½	3.209	40	72	56	86	27½	3.259	28	40	44	86	24½
3.160	44	48	40	100	30½	3.210	24	44	48	72	28	3.260	32	56	44	72	21
3.161	40	64	48	86	25	3.211	40	56	44	86	28½	3.261	40	64	48	72	38½
3.162	28	40	44	86	28	3.212	56	48	28	100	10½	3.262	44	72	48	86	17
3.163	48	64	28	56	32½	3.213	48	40	28	100	17	3.263	24	40	48	86	13
3.164	40	56	44	86	30	3.214	48	64	28	56	31	3.264	48	64	28	56	29½
3.165	24	44	48	72	29½	3.215	40	64	48	72	39½	3.265	48	100	56	72	29
3.166	48	100	56	72	32	3.216	48	100	56	72	30½	3.266	40	72	56	86	25½
3.167	24	40	48	86	19	3.217	56	48	28	100	10	3.267	44	48	40	100	27
3.168	40	56	48	100	22½	3.218	28	48	44	72	25½	3.268	24	44	48	72	26
3.169	40	64	48	72	40½	3.219	28	40	44	86	26	3.269	28	48	44	72	29½
3.170	28	48	40	72	12	3.220	56	44	28	86	39	3.270	40	56	44	86	26½
3.171	32	72	64	86	16½	3.221	28	48	56	86	32	3.271	28	40	44	86	24
3.172	40	100	56	64	25	3.222	28	56	64	86	30	3.272	32	64	48	72	11
3.173	28	56	64	86	31½	3.223	44	48	40	100	28½	3.273	44	100	56	72	17
3.174	40	64	48	86	24½	3.224	32	48	40	72	29½	3.274	48	40	28	100	13
3.175	32	48	40	72	31	3.225	24	44	48	72	27½	3.275	44	40	32	100	21½
3.176	44	48	40	100	30	3.226	40	56	44	86	28	3.276	24	40	48	86	12
3.177	44	40	32	100	25½	3.227	32	64	48	72	14½	3.277	28	40	48	86	33
3.178	28	44	48	86	26½	3.228	44	40	32	100	23½	3.278	40	100	56	64	20½
3.179	32	64	56	86	12½	3.229	32	72	64	86	12½	3.279	40	72	56	86	25
3.180	40	56	44	86	29½	3.230	48	40	28	100	16	3.280	48	64	28	56	29
3.181	28	48	40	72	11	3.231	48	64	28	56	30½	3.281	48	100	56	72	28½
3.182	28	48	40	72	11	3.232	32	48	44	72	37½	3.282	44	48	40	100	26½
3.183	48	100	56	72	31½	3.233	40	100	56	64	22½	3.283	32	44	40	86	14
3.184	44	72	48	86	21	3.234	40	100	56	64	22½	3.284	40	56	44	86	26
3.185	40	100	56	64	24½	3.235	32	72	64	86	12	3.285	32	48	40	72	27½
3.186	40	64	48	86	24	3.236	28	64	56	72	18	3.286	44	40	32	100	21
3.187	28	48	40	72	10½	3.237	28	64	56	72	18	3.287	24	40	48	86	11
3.188	44	64	48	100	15	3.238	44	48	40	100	28	3.288	40	64	48	86	19½
3.189	32	44	40	86	19½	3.239	32	48	40	72	29	3.289	40	100	56	64	20
3.190	28	56	64	86	31	3.240	24	44	48	72	27	3.290	32	44	40	86	13½
3.191	32	48	40	72	30½	3.241	40	56	44	86	27½	3.291	40	64	44	72	30½
3.192	44	48	40	100	29½	3.242	24	40	48	86	14½	3.292	40	72	56	86	24½
3.193	44	64	56	86	44½	3.243	56	44	28	86	38½	3.293	24	40	48	86	10½
3.194	40	72	56	86	28	3.244	28	48	44	72	24½	3.294	28	48	44	72	22½
3.195	44	72	48	86	20½	3.245	28	40	44	86	25	3.295	24	44	48	72	25
3.196	40	56	44	86	29	3.246	28	40	44	86	25	3.296	44	48	40	100	26
3.197	48	64	28	56	31½	3.247	44	100	56	64	32½	3.297	44	40	32	100	20½
3.198	56	44	28	86	39½	3.248	48	64	28	56	30	3.298	40	56	44	86	25½
3.199	40	64	48	86	23½	3.249	48	100	56	72	29½	3.299	40	100	56	64	19½

LEAD.	GEAR ON WORM.	1ST. INTERMEDIATE.	2ND. INTERMEDIATE.	GEAR ON SCREW.	ANGLE.
3.300	32	48	40	72	27
3.301	28	56	64	86	27½
3.302	32	56	44	72	19
3.303	32	44	40	86	12½
3.304	28	44	48	86	21½
3.305	40	72	56	86	24
3.306	40	64	48	72	37½
3.307	40	64	44	72	30
3.308	28	40	44	86	22½
3.309	24	44	48	72	24½
3.310	44	48	40	100	25½
3.311	48	100	56	72	27½
3.312	40	56	44	86	25
3.313	44	100	56	72	14½
3.314	44	56	48	100	28½
3.315	32	48	40	72	26½
3.316	28	64	56	72	13
3.317	28	48	44	72	21½
3.318	40	72	56	86	23½
3.319	40	100	56	64	18½
3.320	28	40	44	86	22
3.321	32	56	44	72	18
3.322	28	64	56	72	12½
3.323	44	48	40	100	25
3.324	44	72	48	86	13
3.325	40	56	44	86	24½
3.326	48	100	56	72	27
3.327	40	64	48	86	17½
3.328	28	48	44	72	21
3.329	32	48	40	72	26
3.330	28	56	64	86	26½
3.331	56	44	28	86	36½
3.332	28	40	44	86	21½
3.333	32	64	56	72	31
3.334	24	44	48	72	23½
3.335	28	64	56	72	11½
3.336	40	64	48	86	17
3.337	44	48	40	100	24½
3.338	40	56	44	86	24
3.339	28	48	44	72	20½
3.340	40	64	44	72	29
3.341	48	64	28	56	27
3.342	44	72	48	86	11½
3.343	32	48	40	72	25½
3.344	28	56	64	86	26
3.345	32	44	48	86	34½
3.346	28	64	56	72	10½
3.347	24	44	48	72	23
3.348	44	40	32	100	18
3.349	28	40	48	86	31
3.350	44	48	40	100	24
3.351	40	56	44	86	23½
3.352	56	48	24	64	40
3.353	40	64	48	86	16
3.354	28	40	44	86	20½
3.355	48	100	56	72	26
3.356	48	64	28	56	26½
3.357	32	48	40	72	25
3.358	28	56	64	86	25½
3.359	28	56	64	86	25½
3.360	40	56	48	100	11½
3.361	28	48	44	72	19½
3.362	40	56	48	86	32½
3.363	44	48	40	100	23½
3.364	40	56	44	86	23
3.365	28	40	44	86	20
3.366	40	72	56	86	21½
3.367	28	44	48	86	18½
3.368	28	44	48	86	18½
3.369	48	100	56	72	25½
3.370	48	64	28	56	26
3.371	32	48	40	72	24½
3.372	28	56	64	86	25
3.373	40	100	56	64	15½
3.374	56	44	28	86	35½
3.375	44	48	40	100	23
3.376	40	56	44	86	22½
3.377	28	44	48	86	18
3.378	40	72	56	86	21
3.379	32	56	48	72	27½
3.380	32	56	48	72	27½
3.381	28	48	44	72	18½
3.382	40	56	48	100	9½
3.383	48	100	56	72	25
3.384	32	48	40	72	24
3.385	48	64	28	56	25½
3.386	28	56	64	86	24½
3.387	28	44	48	86	17½
3.388	40	56	44	86	22
3.389	40	72	56	86	20½
3.390	48	40	32	100	28
3.391	28	48	44	72	18
3.392	44	40	32	100	15½
3.393	44	72	56	86	31½
3.394	24	44	48	72	21
3.395	32	56	44	72	13½
3.396	28	40	44	86	18½
3.397	32	48	40	72	23½
3.398	48	100	56	64	36
3.399	28	56	64	86	24
3.400	40	56	44	86	21½
3.401	32	64	56	72	29
3.402	32	56	44	72	13
3.403	40	100	56	64	13½
3.404	44	56	48	100	25½
3.405	28	44	48	86	16½
3.406	24	44	48	72	20½
3.407	32	44	40	72	32½
3.408	44	40	32	100	14½
3.409	28	48	44	72	17
3.410	32	48	40	72	23
3.411	44	72	56	86	31
3.412	48	64	28	56	24½
3.413	28	44	48	86	16
3.414	56	40	28	86	41½
3.415	28	40	44	86	17¼
3.416	32	56	44	72	12
3.417	24	44	48	72	20
3.418	28	48	44	72	16½
3.419	44	64	48	86	27
3.420	32	40	48	86	40
3.421	40	72	56	86	19
3.422	32	48	40	72	22½
3.423	40	56	44	86	20½
3.424	40	64	48	86	11
3.425	28	56	64	86	23
3.426	48	64	28	56	24
3.427	24	44	48	72	19½
3.428	32	56	44	72	11
3.429	56	40	28	100	29
3.430	28	44	48	86	15
3.431	40	72	56	86	18½
3.432	44	56	48	100	24½
3.433	40	64	44	72	26
3.434	40	56	44	86	20
3.435	44	48	40	100	20½
3.436	48	100	56	72	23
3.437	44	40	32	100	12½
3.438	24	44	48	72	19
3.439	48	64	28	56	23½
3.440	48	100	56	64	35
3.441	40	72	56	86	18
3.442	28	40	44	86	16
3.443	28	48	44	72	15
3.444	40	56	44	86	19½
3.445	28	44	48	86	14
3.446	44	48	40	100	20
3.447	40	100	56	64	10
3.448	24	44	48	72	18½
3.449	48	100	56	72	22½

LEAD.	GEAR ON WORM.	1ST. INTERMEDIATE.	2ND. INTERMEDIATE.	GEAR ON SCREW.	ANGLE.
3.450	28	56	64	86	22
3.451	40	72	56	86	17½
3.452	48	64	28	56	23
3.453	28	44	48	86	13½
3.454	40	64	48	72	34
3.455	40	56	44	86	19
3.456	56	44	28	86	33½
3.457	44	48	40	100	19½
3.458	24	44	48	72	18
3.459	28	40	44	86	15
3.460	40	72	56	86	17
3.461	48	100	56	72	22
3.462	28	56	64	86	21½
3.463	44	64	48	86	25½
3.464	32	44	56	86	43
3.465	32	64	56	72	27
3.466	28	48	44	72	13½
3.467	44	48	40	100	19
3.468	24	44	48	72	17½
3.469	32	48	40	72	20½
3.470	28	48	56	86	24
3.471	44	56	48	100	25
3.472	40	48	44	86	35½
3.473	48	100	56	72	21½
3.474	28	56	64	86	21
3.475	40	56	44	86	18
3.476	28	48	56	72	40
3.477	24	44	48	72	17
3.478	44	48	40	100	18½
3.479	32	44	48	86	31
3.480	28	48	44	72	12½
3.481	32	48	40	72	20
3.482	28	40	44	86	13½
3.483	28	48	56	86	23½
3.484	44	56	48	100	22½
3.485	40	56	44	86	17½
3.486	24	44	48	72	16½
3.487	28	48	44	72	12
3.488	44	48	40	100	18
3.489	48	64	28	56	21½
3.490	32	40	44	86	31½
3.491	44	64	48	86	24½
3.492	32	48	40	72	19½
3.493	28	48	44	72	11½
3.494	40	56	44	86	17
3.495	24	44	48	72	16
3.496	28	40	44	86	12½
3.497	44	48	40	100	17½
3.498	32	44	48	86	30½
3.499	28	48	44	72	11
3.500	28	48	44	72	11
3.501	48	64	28	56	21
3.502	32	48	40	72	19
3.503	40	72	56	86	14½
3.504	24	44	48	72	15½
3.505	28	48	44	72	10½
3.506	40	72	64	86	32
3.507	44	48	40	100	17
3.508	28	56	64	86	19½
3.509	28	40	44	86	11½
3.510	40	72	56	86	14
3.511	40	72	56	86	14
3.512	24	44	48	72	15
3.513	40	56	44	86	16
3.514	40	64	48	72	32½
3.515	28	40	44	86	11
3.516	44	48	40	100	16½
3.517	44	100	56	64	24
3.518	28	56	64	86	19
3.519	48	100	56	72	19½
3.520	24	44	48	72	14½
3.521	40	56	44	86	15½
3.522	28	48	56	86	22
3.523	32	48	40	72	18
3.524	48	64	28	56	20
3.525	44	48	40	100	16
3.526	28	40	48	86	25½
3.527	28	40	44	86	10
3.528	24	44	48	72	14
3.529	40	56	44	86	15
3.530	40	56	44	86	15
3.531	44	100	56	64	23½
3.532	40	72	56	86	12½
3.533	32	48	40	72	17½
3.534	44	48	40	100	15½
3.535	24	44	48	72	13½
3.536	24	44	48	72	13½
3.537	28	44	48	72	33½
3.538	40	56	44	86	14½
3.539	28	56	64	86	18
3.540	48	100	56	72	18½
3.541	40	64	44	72	22
3.542	44	48	40	100	15
3.543	24	44	48	72	13
3.544	44	100	56	64	23
3.545	40	56	44	86	14
3.546	48	64	28	56	19
3.547	44	56	48	86	36
3.548	48	40	32	100	22½
3.549	28	56	64	86	17½
3.550	24	44	48	72	12½
3.551	32	48	40	72	16½
3.552	32	48	40	72	16½
3.553	40	56	44	86	13½
3.554	40	56	44	72	35½
3.555	40	56	48	100	19½
3.556	24	44	48	72	12
3.557	24	44	48	72	12
3.558	44	48	40	100	14
3.559	44	72	64	86	38½
3.560	40	56	44	86	13
3.561	44	72	56	86	26½
3.562	32	40	44	86	29½
3.563	24	44	48	72	11½
3.564	86	64	28	72	47
3.565	40	64	44	72	21
3.566	44	48	40	100	13½
3.567	40	56	44	86	12½
3.568	28	56	64	86	16½
3.569	24	44	48	72	11
3.570	48	100	56	72	17
3.571	56	44	28	86	30½
3.572	40	64	48	72	31
3.573	44	48	40	100	15
3.574	40	56	44	86	12
3.575	24	44	48	72	10½
3.576	48	64	28	56	17½
3.577	28	56	64	86	16
3.578	32	48	40	72	15
3.579	48	100	56	72	16½
3.580	44	48	40	100	12½
3.581	48	100	56	64	31½
3.582	44	64	48	86	21
3.583	28	40	48	86	23½
3.584	32	44	40	72	27½
3.585	48	40	32	100	21
3.586	32	48	40	72	14½
3.587	40	56	44	86	11
3.588	48	100	56	72	16
3.589	56	44	28	86	30
3.590	40	64	48	72	30½
3.591	28	48	56	86	19
3.592	44	56	48	86	35
3.593	40	56	44	86	10½
3.594	32	48	40	72	14
3.595	56	40	28	100	23½
3.596	48	64	28	56	16½
3.597	48	100	56	72	15½
3.598	40	56	44	86	10
3.599	40	56	44	86	10

LEAD.	GEAR ON WORM.	1ST. INTERMEDIATE.	2ND. INTERMEDIATE.	GEAR ON SCREW.	ANGLE.	LEAD.	GEAR ON WORM.	1ST. INTERMEDIATE.	2ND. INTERMEDIATE.	GEAR ON SCREW.	ANGLE.	LEAD.	GEAR ON WORM.	1ST. INTERMEDIATE.	2ND. INTERMEDIATE.	GEAR ON SCREW.	ANGLE.
3.600	44	48	40	100	11	3.650	40	72	64	86	28	3.700	48	40	32	100	15½
3.601	56	40	32	100	36½	3.651	48	100	56	72	12	3.701	28	48	56	86	13
3.602	32	48	40	72	13½	3.652	40	64	44	72	17	3.702	44	56	48	100	11
3.603	28	56	64	86	14½	3.653	28	56	64	86	11	3.703	40	64	56	86	24½
3.604	32	40	44	72	42½	3.654	48	64	28	56	13	3.704	44	56	48	72	45
3.605	48	64	28	56	16	3.655	32	64	56	72	20	3.705	32	56	48	72	13½
3.606	44	48	40	100	10½	3.656	40	56	48	86	23½	3.706	40	64	44	72	14
3.607	56	44	28	86	29½	3.657	44	56	48	86	33½	3.707	32	48	44	72	24½
3.608	48	40	32	100	20	3.658	48	100	56	72	11½	3.708	44	56	48	100	10½
3.609	32	48	40	72	15	3.659	28	56	64	86	10½	3.709	56	44	28	86	26½
3.610	28	56	64	86	14	3.660	28	48	56	86	15½	3.710	44	100	56	64	15½
3.611	44	48	40	100	10	3.661	48	64	28	56	12½	3.711	40	48	44	86	29½
3.612	28	48	56	86	18	3.662	40	64	48	72	28½	3.712	32	56	48	72	15
3.613	32	56	48	72	18½	3.663	44	72	56	86	23	3.713	40	64	48	72	27
3.614	48	100	56	72	14½	3.664	28	56	64	86	10	3.714	44	56	48	100	10
3.615	32	44	40	72	26½	3.665	48	100	56	72	11	3.715	28	48	56	86	12
3.616	32	48	40	72	12½	3.666	32	64	56	72	19½	3.716	28	40	48	86	18
3.617	44	64	48	86	19½	3.667	44	56	48	100	13½	3.717	56	40	28	100	18½
3.618	28	56	64	86	13½	3.668	48	64	28	56	12	3.718	48	40	32	100	14½
3.619	32	64	56	72	21½	3.669	28	48	56	86	15	3.719	44	100	56	64	15
3.620	48	40	32	100	19½	3.670	48	100	56	72	10½	3.720	32	56	48	72	12½
3.621	44	72	56	86	24½	3.671	48	100	56	72	10½	3.721	40	64	44	72	13
3.622	48	100	56	72	14	3.672	48	40	32	100	17	3.722	28	48	56	86	11½
3.623	32	48	40	72	12	3.673	40	64	56	86	25½	3.723	44	64	48	86	14
3.624	56	44	28	86	29	3.674	44	86	48	100	13	3.724	32	40	44	86	24½
3.625	44	56	48	100	16	3.675	48	64	28	56	11½	3.725	56	44	28	86	26
3.626	28	56	64	86	13	3.676	48	100	56	72	10	3.726	48	40	32	100	14
3.627	40	64	48	72	29½	3.677	28	48	56	86	14½	3.727	32	56	48	72	12
3.628	44	64	48	86	19	3.678	44	56	48	86	33	3.728	28	48	56	86	11
3.629	44	100	56	64	19½	3.679	40	64	48	72	28	3.729	40	64	48	72	26½
3.630	32	48	40	72	11½	3.680	32	56	48	72	15	3.730	48	64	32	56	29½
3.631	48	64	28	56	14½	3.681	48	64	28	56	11	3.731	44	64	48	86	13½
3.632	28	48	56	86	17	3.682	44	56	48	100	12½	3.732	32	44	40	72	22½
3.633	28	56	64	86	12½	3.683	28	40	48	86	19½	3.733	32	56	48	72	11½
3.634	44	56	48	100	15½	3.684	56	40	28	100	20	3.734	28	48	56	86	10½
3.635	28	40	48	86	21½	3.685	28	48	56	86	14	3.735	40	64	44	72	12
3.636	32	48	40	72	11	3.686	32	44	48	72	40½	3.736	40	64	44	72	12
3.637	48	100	56	72	13	3.687	48	64	28	56	10½	3.737	32	56	64	86	28½
3.638	72	56	24	64	41	3.688	44	64	48	86	16	3.738	32	64	56	72	16
3.639	48	64	28	56	14	3.689	44	56	48	100	12	3.739	44	64	48	86	13
3.640	28	56	64	86	12	3.690	56	48	24	64	32½	3.740	56	44	28	86	25½
3.641	40	56	48	86	24	3.691	48	40	32	100	16	3.741	48	44	40	100	31
3.642	32	48	40	72	10½	3.692	56	44	28	86	27	3.742	40	64	44	72	11½
3.643	44	56	48	100	15	3.693	48	64	28	56	10	3.743	40	64	44	72	11½
3.644	48	100	56	72	12½	3.694	28	40	48	86	19	3.744	44	100	56	64	13½
3.645	48	100	56	72	12½	3.695	44	56	48	100	11½	3.745	40	64	48	72	26
3.646	28	56	64	86	11½	3.696	40	64	48	72	27½	3.746	32	56	48	72	10½
3.647	28	40	48	86	21	3.697	32	56	48	72	14	3.747	40	64	56	86	23
3.648	32	48	40	72	10	3.698	44	56	48	86	32½	3.748	32	64	56	72	15½
3.649	44	64	48	86	18	3.699	32	64	56	72	18	3.749	40	64	44	72	11

LEAD.	GEAR ON WORM.	1ST. INTERMEDIATE.	2ND. INTERMEDIATE.	GEAR ON SCREW.	ANGLE.
3.750	32	44	48	86	22½
3.751	44	100	56	64	13
3.752	32	56	48	72	10
3.753	44	64	48	86	12
3.754	32	40	44	86	23½
3.755	40	64	44	72	10½
3.756	56	44	28	86	25
3.757	32	64	56	72	15
3.758	40	56	48	86	19½
3.759	44	100	56	64	12½
3.760	44	64	48	86	11½
3.761	40	64	48	72	25½
3.762	44	72	56	86	19
3.763	48	40	32	100	11½
3.764	32	44	48	86	22
3.765	32	64	56	72	14½
3.766	44	64	48	86	11
3.767	44	64	48	86	11
3.768	56	40	28	100	16
3.769	48	40	32	100	11
3.770	48	40	32	100	11
3.771	56	44	28	86	24½
3.772	32	44	40	72	21
3.773	44	64	48	86	10½
3.774	32	64	56	72	14
3.775	48	100	56	64	26
3.776	48	40	32	100	10½
3.777	40	64	48	72	25
3.778	48	72	56	86	29
3.779	44	64	48	86	10
3.780	40	56	48	86	18½
3.781	32	64	56	72	13½
3.782	48	40	32	100	10
3.783	28	40	48	86	14½
3.784	44	72	56	86	18
3.785	40	48	44	72	42
3.786	56	44	28	86	24
3.787	40	64	56	86	21½
3.788	32	56	64	86	27
3.789	32	64	56	72	13
3.790	32	48	44	72	21½
3.791	44	100	56	64	10
3.792	40	64	48	72	24½
3.793	44	72	64	86	33½
3.794	32	44	48	72	38½
3.795	56	40	28	100	14½
3.796	32	44	40	72	20
3.797	32	64	56	72	12½
3.798	48	44	40	100	29½
3.799	28	40	48	86	13½
3.800	56	44	28	86	23½
3.801	40	56	48	86	17½
3.802	40	56	48	86	17½
3.803	32	48	44	72	21
3.804	32	64	56	72	12
3.805	44	72	56	86	17
3.806	48	100	56	64	25
3.807	40	64	48	72	24
3.808	32	44	40	72	19½
3.809	28	56	64	72	31
3.810	56	40	32	86	43
3.811	32	64	56	72	11½
3.812	56	40	28	100	13½
3.813	28	44	48	72	26
3.814	28	40	48	86	12½
3.815	56	44	28	86	23
3.816	32	48	44	72	20½
3.817	48	44	40	100	29
3.818	32	64	56	72	11
3.819	40	72	64	86	22½
3.820	56	40	28	100	13
3.821	40	64	48	72	23½
3.822	28	40	48	86	12
3.823	28	40	48	72	35
3.824	32	64	56	72	10½
3.825	44	72	56	86	16
3.826	32	44	48	86	19½
3.827	56	40	28	100	12½
3.828	28	40	48	86	11½
3.829	56	44	28	86	22½
3.830	40	64	56	72	38
3.831	44	56	48	72	43
3.832	40	56	48	86	16
3.833	40	72	64	86	22
3.834	56	40	28	100	12
3.835	28	40	48	86	11
3.836	40	64	48	72	23
3.837	40	64	56	86	19½
3.838	32	44	48	86	19
3.839	86	48	24	72	50
3.840	32	48	44	72	19½
3.841	56	40	28	100	11½
3.842	56	44	28	86	22
3.843	44	72	56	86	15
3.844	56	40	28	86	32½
3.845	28	44	48	72	25
3.846	28	40	48	72	34½
3.847	32	40	48	86	30½
3.848	28	40	48	86	10
3.849	32	44	48	86	18½
3.850	40	64	48	72	22½
3.851	48	72	56	86	27½
3.852	44	72	56	86	14½
3.853	32	44	40	72	17½
3.854	56	40	28	100	10½
3.855	56	40	28	100	10½
3.856	40	64	56	72	37½
3.857	44	72	64	86	32
3.858	32	40	44	86	19½
3.859	40	56	48	86	14½
3.860	56	40	28	100	10
3.861	56	40	28	100	10
3.862	56	44	24	64	36
3.863	32	44	40	72	17
3.864	40	64	48	72	22
3.865	56	40	28	86	32
3.866	48	100	56	64	23
3.867	32	40	48	86	30
3.868	40	56	48	86	14
3.869	56	44	28	86	21
3.870	32	40	44	86	19
3.871	32	44	48	86	17½
3.872	40	72	64	86	20½
3.873	56	44	28	72	38½
3.874	32	44	40	72	16½
3.875	32	48	44	72	18
3.876	40	56	48	86	13½
3.877	40	64	48	72	21½
3.878	44	72	64	86	31½
3.879	32	44	56	86	35
3.880	32	44	56	86	35
3.881	32	40	44	86	18½
3.882	56	44	28	86	20½
3.883	32	44	40	72	16
3.884	40	56	48	86	13
3.885	44	72	56	86	12½
3.886	56	40	28	86	31½
3.887	44	64	48	72	32
3.888	48	44	40	100	27
3.889	40	56	44	72	27
3.890	40	64	48	72	21
3.891	40	56	48	86	12½
3.892	44	72	56	86	12
3.893	32	44	40	72	15½
3.894	56	44	28	86	20
3.895	40	48	44	86	24
3.896	32	48	44	72	17
3.897	40	72	64	86	19½
3.898	56	48	24	64	27
3.899	44	72	56	86	11½

LEAD.	GEAR ON WORM.	1ST. INTERMEDIATE.	2ND. INTERMEDIATE.	GEAR ON SCREW.	ANGLE.	LEAD.	GEAR ON WORM.	1ST. INTERMEDIATE.	2ND. INTERMEDIATE.	GEAR ON SCREW.	ANGLE.	LEAD.	GEAR ON WORM.	1ST. INTERMEDIATE.	2ND. INTERMEDIATE.	GEAR ON SCREW.	ANGLE.
3.900	56	44	28	72	38	3.950	48	72	56	86	24½	4.000	28	40	48	72	31
3.901	56	40	32	86	41½	3.951	48	64	56	86	36	4.001	40	48	56	86	42½
3.902	32	44	48	86	16	3.952	40	64	48	72	18½	4.002	40	64	56	86	10½
3.903	40	64	48	72	20½	3.953	44	64	56	86	28	4.003	56	44	28	86	15
3.904	32	40	44	86	17½	3.954	40	48	44	86	22	4.004	32	40	44	86	12
3.905	28	44	48	72	23	3.955	32	44	48	86	13	4.005	40	64	48	72	16
3.906	56	44	28	86	19½	3.956	56	40	32	100	28	4.006	40	64	48	72	16
3.907	56	40	28	86	31	3.957	40	64	56	86	13½	4.007	44	64	56	86	26½
3.908	44	64	48	72	31½	3.958	40	64	56	86	13½	4.008	40	64	56	86	10
3.909	28	48	56	72	30½	3.959	32	44	40	72	11½	4.009	56	40	32	100	26½
3.910	56	48	28	64	40	3.960	28	44	48	72	21	4.010	56	40	32	100	26½
3.911	32	44	48	86	15½	3.961	32	48	44	72	13½	4.011	32	40	44	86	11½
3.912	44	72	56	86	10½	3.962	32	48	44	72	13½	4.012	56	44	28	86	14½
3.913	40	56	48	86	11	3.963	40	64	48	72	18	4.013	32	40	48	86	26
3.914	28	40	48	72	33	3.964	40	72	64	86	16½	4.014	48	64	32	56	20½
3.915	48	64	32	56	24	3.965	56	48	24	64	25	4.015	40	64	48	72	15½
3.916	40	64	48	72	20	3.966	32	44	40	72	11	4.016	32	44	56	86	32
3.917	56	40	28	72	44	3.967	56	40	28	86	29½	4.017	48	100	56	64	17
3.918	56	44	28	86	19	3.968	28	48	56	72	29	4.018	32	40	44	86	11
3.919	44	72	56	86	10	3.969	44	64	48	72	30	4.019	40	48	44	86	19½
3.920	32	44	40	72	14	3.970	32	44	48	86	12	4.020	40	72	64	86	13½
3.921	32	44	48	86	15	3.971	44	64	56	86	27½	4.021	56	44	28	86	14
3.922	40	64	56	86	15½	3.972	32	44	40	72	10½	4.022	56	48	28	64	38
3.923	40	56	44	72	26	3.973	56	44	28	86	16½	4.023	28	44	48	72	18½
3.924	32	40	44	86	16½	3.974	40	64	48	72	17½	4.024	56	40	28	86	28
3.925	40	56	48	86	10	3.975	32	56	64	72	38½	4.025	40	64	48	72	15
3.926	32	44	56	86	34	3.976	48	64	56	86	35½	4.026	56	44	24	64	32½
3.927	56	40	28	86	30½	3.977	32	44	48	86	11½	4.027	56	40	32	100	26
3.928	40	64	48	72	19½	3.978	32	44	48	86	11½	4.028	44	64	48	72	28½
3.929	44	64	48	72	31	3.979	32	44	40	72	10	4.029	56	44	28	86	13½
3.930	56	44	28	86	18½	3.980	32	40	44	86	13½	4.030	32	40	48	86	25½
3.931	40	64	56	86	15	3.981	40	64	56	86	12	4.031	32	40	44	86	10
3.932	40	72	64	86	18	3.982	40	64	56	72	35	4.032	32	56	64	86	18½
3.933	28	44	48	72	22	3.983	56	44	28	86	16	4.033	40	56	44	72	22½
3.934	32	40	44	86	16	3.984	32	44	48	86	11	4.034	40	64	48	72	14½
3.935	32	48	44	72	15	3.985	40	64	48	72	17	4.035	44	64	56	72	41
3.936	32	44	40	72	13	3.986	56	40	28	86	29	4.036	40	72	64	86	12½
3.937	56	40	32	100	28½	3.987	56	40	28	86	29	4.037	48	100	56	64	16
3.938	32	44	48	86	14	3.988	40	64	56	86	11½	4.038	56	44	28	86	13
3.939	44	72	64	86	30	3.989	44	64	48	72	29½	4.039	48	72	56	86	21½
3.940	40	64	48	72	19	3.990	44	56	48	86	24½	4.040	48	64	32	56	19½
3.941	56	44	28	86	18	3.991	32	44	48	86	10½	4.041	44	64	56	86	25½
3.942	32	56	64	86	22	3.992	56	40	32	100	27	4.042	28	40	48	72	30
3.943	40	72	64	86	17½	3.993	56	44	28	86	15½	4.043	40	64	48	72	14
3.944	32	44	40	72	12½	3.994	32	44	56	86	32½	4.044	56	40	32	100	25½
3.945	48	64	32	56	23	3.995	40	64	48	72	16½	4.045	56	48	44	100	38
3.946	48	64	32	56	23	3.996	32	40	44	86	12½	4.046	56	44	28	86	12½
3.947	32	44	48	86	13½	3.997	32	44	48	86	10	4.047	44	64	48	72	28
3.948	40	56	48	72	34	3.998	40	44	48	86	38	4.048	56	44	24	64	32
3.949	40	64	56	86	14	3.999	32	48	44	72	11	4.049	48	64	56	86	34

LEAD.	GEAR ON WORM.	1ST. INTERMEDIATE.	2ND. INTERMEDIATE.	GEAR ON SCREW.	ANGLE.	LEAD.	GEAR ON WORM.	1ST. INTERMEDIATE.	2ND. INTERMEDIATE.	GEAR ON SCREW.	ANGLE.	LEAD.	GEAR ON WORM.	1ST. INTERMEDIATE.	2ND. INTERMEDIATE.	GEAR ON SCREW.	ANGLE.
4.050	40	72	64	86	11½	4.100	48	100	56	64	12½	4.150	48	64	32	56	14½
4.051	40	72	64	86	11½	4.101	32	44	56	86	30	4.151	44	64	56	86	22
4.052	40	64	48	72	13½	4.102	28	40	48	72	28½	4.152	56	48	44	100	36
4.053	56	44	28	86	12	4.103	56	44	28	72	34	4.153	56	48	44	100	36
4.054	40	64	56	72	33½	4.104	48	72	56	86	19	4.154	44	64	48	72	25
4.055	40	48	44	86	18	4.105	44	72	64	86	25½	4.155	44	72	64	86	24
4.056	56	48	24	64	22	4.106	44	64	56	86	23½	4.156	32	44	48	72	31
4.057	48	100	56	64	15	4.107	28	44	48	72	14½	4.157	28	44	48	72	11½
4.058	44	64	56	86	25	4.108	56	40	32	100	23½	4.158	28	40	48	72	27
4.059	32	44	56	86	31	4.109	56	40	32	100	23½	4.159	32	56	64	86	12
4.060	40	64	48	72	13	4.110	48	64	32	56	16½	4.160	56	40	32	86	37
4.061	56	44	28	86	11½	4.111	56	48	24	64	20	4.161	28	48	56	72	23½
4.062	28	40	48	72	29½	4.112	28	48	56	72	25	4.162	32	44	56	86	28½
4.063	32	40	48	86	24½	4.113	56	44	24	64	30½	4.163	40	48	44	86	12½
4.064	48	64	32	56	18½	4.114	56	40	28	86	25½	4.164	56	40	28	86	24
4.065	44	64	48	72	27½	4.115	40	56	44	72	19½	4.165	44	64	56	86	21½
4.066	48	100	56	64	14½	4.116	48	100	56	64	11½	4.166	44	64	56	86	21½
4.067	28	44	48	72	16½	4.117	32	56	64	86	14½	4.167	32	56	64	86	11½
4.068	40	64	48	72	12½	4.118	86	64	28	72	38	4.168	56	40	32	100	21½
4.069	32	44	56	72	44	4.119	44	64	48	72	26	4.169	32	40	48	86	21
4.070	44	72	64	86	26½	4.120	48	64	32	56	16	4.170	44	64	48	72	24½
4.071	40	72	64	86	10	4.121	28	40	48	72	28	4.171	44	72	64	86	23½
4.072	56	48	44	100	37½	4.122	32	44	56	86	29½	4.172	56	48	24	64	17½
4.073	48	64	56	86	33½	4.123	48	100	56	64	11	4.173	48	72	56	86	16
4.074	44	64	56	86	24½	4.124	56	40	32	100	23	4.174	32	56	64	86	11
4.075	56	44	28	86	10½	4.125	28	44	48	72	13½	4.175	56	44	24	64	29
4.076	40	64	48	72	12	4.126	32	56	64	86	14	4.176	28	56	64	72	20
4.077	56	40	32	100	24½	4.127	40	56	44	72	19	4.177	28	40	48	72	26½
4.078	28	48	56	72	26	4.128	28	48	56	72	24½	4.178	28	44	48	72	10
4.079	56	40	28	86	26½	4.129	28	48	56	72	24½	4.179	56	48	44	100	35½
4.080	44	56	48	86	21½	4.130	48	100	56	64	10½	4.180	56	40	28	86	23½
4.081	56	44	28	86	10	4.131	56	40	28	86	25	4.181	32	56	64	86	10½
4.082	28	40	48	72	29	4.132	72	56	24	64	31	4.182	32	44	56	86	28
4.083	40	64	48	72	11½	4.133	28	44	48	72	13	4.183	56	40	32	100	21
4.084	44	64	48	72	27	4.134	32	56	64	86	13½	4.184	48	64	32	56	12½
4.085	56	48	24	64	21	4.135	32	56	64	86	13½	4.185	40	56	44	72	16½
4.086	32	48	56	72	38	4.136	44	64	56	86	22½	4.186	44	72	64	86	23
4.087	32	56	64	86	16	4.137	44	64	48	72	25½	4.187	44	64	48	72	24
4.088	44	72	64	86	26	4.138	44	72	64	86	24½	4.188	40	64	56	72	30½
4.089	40	48	44	86	16½	4.139	44	72	64	86	24½	4.189	28	56	64	72	19½
4.090	40	64	48	72	11	4.140	28	40	48	72	27½	4.190	64	48	32	72	45
4.091	40	64	48	72	11	4.141	28	44	48	72	12½	4.191	32	40	44	72	31
4.092	48	100	56	64	13	4.142	32	44	56	86	29	4.192	28	48	56	72	22½
4.093	56	40	32	100	24	4.143	32	56	64	86	13	4.193	44	64	56	86	20½
4.094	44	56	48	86	21	4.144	32	40	48	72	39	4.194	44	64	56	86	20½
4.095	28	48	56	72	25½	4.145	28	48	56	72	24	4.195	28	40	48	72	26
4.096	48	64	56	86	33	4.146	40	48	44	86	13½	4.196	56	40	28	86	23
4.097	40	64	48	72	10½	4.147	56	40	28	86	24½	4.197	56	44	28	72	32
4.098	56	48	24	64	20½	4.148	56	40	28	86	24½	4.198	32	44	28	72	30
4.099	40	48	44	86	16	4.149	28	44	48	72	12	4.199	40	48	44	86	10

LEAD.	GEAR ON WORM.	1ST. INTERMEDIATE.	2ND. INTERMEDIATE.	GEAR ON SCREW.	ANGLE.	LEAD.	GEAR ON WORM.	1ST. INTERMEDIATE.	2ND. INTERMEDIATE.	GEAR ON SCREW.	ANGLE.	LEAD.	GEAR ON WORM.	1ST. INTERMEDIATE.	2ND. INTERMEDIATE.	GEAR ON SCREW.	ANGLE.
4.200	48	64	32	56	11½	4.250	28	48	56	72	20½	4.300	44	72	64	86	19
4.201	32	44	56	86	27½	4.251	40	64	56	72	29	4.301	56	72	64	86	42
4.202	44	72	64	86	22½	4.252	48	44	40	100	13	4.302	28	48	56	72	18½
4.203	44	64	48	72	23½	4.253	40	56	44	72	13	4.303	32	40	48	86	15½
4.204	44	56	48	86	16½	4.254	48	72	56	86	11½	4.304	44	64	56	86	16
4.205	48	44	40	100	15½	4.255	56	40	28	86	21	4.305	44	56	48	86	11
4.206	40	56	44	72	15½	4.256	40	44	48	86	33	4.306	56	40	32	100	16
4.207	28	48	56	72	22	4.257	32	44	56	86	26	4.307	44	64	48	72	20
4.208	48	64	56	86	30½	4.258	44	64	56	86	18	4.308	56	48	24	64	10
4.209	32	40	48	86	19½	4.259	32	40	48	72	37	4.309	32	44	56	86	24½
4.210	56	40	32	100	20	4.260	44	72	64	86	20½	4.310	32	44	56	86	24½
4.211	56	40	28	86	22½	4.261	56	40	32	100	18	4.311	44	56	64	86	42½
4.212	28	40	48	72	25½	4.262	40	56	48	72	26½	4.312	28	40	48	72	22½
4.213	32	40	44	72	30½	4.263	28	40	48	72	24	4.313	44	72	64	86	18½
4.214	48	64	32	56	10½	4.264	28	40	48	72	24	4.314	44	64	56	86	15½
4.215	48	44	40	100	15	4.265	56	44	28	64	40	4.315	28	48	56	72	18
4.216	40	56	44	72	15	4.266	48	64	56	72	43	4.316	40	56	48	72	25
4.217	44	72	64	86	22	4.267	56	40	32	86	35	4.317	56	40	32	100	15½
4.218	40	56	64	86	37½	4.268	48	72	56	86	10½	4.318	44	56	48	86	10
4.219	44	64	48	72	23	4.269	56	40	28	86	20½	4.319	40	48	44	72	32
4.220	32	44	56	86	27	4.270	44	64	56	86	17½	4.320	44	64	48	72	19½
4.221	28	48	56	72	21½	4.271	56	48	24	64	12½	4.321	28	56	64	72	13½
4.222	40	48	44	72	34	4.272	28	56	64	72	16	4.322	56	40	28	86	18½
4.223	56	40	32	100	19½	4.273	56	40	32	100	17½	4.323	56	40	28	86	18½
4.224	40	56	48	72	27½	4.274	44	72	64	86	20	4.324	44	64	56	86	15
4.225	48	44	40	100	14½	4.275	32	44	56	86	25½	4.325	44	72	64	86	18
4.226	56	40	28	86	22	4.276	48	44	40	100	11½	4.326	32	44	56	86	24
4.227	28	56	64	72	18	4.277	28	48	56	72	19½	4.327	32	44	56	86	24
4.228	86	64	28	72	36	4.278	48	64	40	56	37	4.328	56	44	28	72	29
4.229	40	56	64	86	35½	4.279	44	64	48	72	21	4.329	56	44	28	72	29
4.230	28	40	48	72	25	4.280	28	40	48	72	23½	4.330	28	56	64	72	13
4.231	44	72	64	86	21½	4.281	44	64	56	86	17	4.331	40	64	56	72	27
4.232	44	72	64	86	21½	4.282	28	56	64	72	15½	4.332	32	40	48	86	14
4.233	56	72	64	86	43	4.283	56	40	28	86	20	4.333	44	64	48	72	19
4.234	48	44	40	100	14	4.284	56	40	32	100	17	4.334	44	64	56	86	14½
4.235	40	56	44	72	14	4.285	40	56	44	72	11	4.335	56	40	28	86	18
4.236	28	48	56	72	21	4.286	56	44	28	72	30	4.336	32	40	44	72	27½
4.237	72	56	24	64	28½	4.287	44	72	64	86	19½	4.337	44	72	64	86	17½
4.238	32	44	56	86	26½	4.288	44	72	64	86	19½	4.338	44	72	64	86	17½
4.239	48	64	44	56	44	4.289	44	56	48	86	12	4.339	28	48	56	72	17
4.240	32	44	48	72	29	4.290	28	48	56	72	19	4.340	72	48	24	64	39½
4.241	56	40	28	86	21½	4.291	48	44	40	100	10½	4.341	86	56	24	72	32
4.242	56	44	28	72	31	4.292	32	44	56	86	25	4.342	28	40	48	72	21½
4.243	48	44	40	100	13½	4.293	44	64	48	72	20½	4.343	32	44	56	86	23½
4.244	40	56	44	72	13½	4.294	64	44	32	86	37½	4.344	44	64	56	86	14
4.245	56	48	24	64	14	4.295	56	48	24	64	11	4.345	64	48	24	56	40½
4.246	44	72	64	86	21	4.296	28	40	48	72	23	4.346	44	64	48	72	18½
4.247	28	40	48	72	24½	4.297	56	40	28	86	19½	4.347	56	40	28	86	17½
4.248	56	40	32	100	18½	4.298	48	44	40	100	10	4.348	32	48	56	72	33
4.249	44	64	48	72	22	4.299	40	56	44	72	10	4.349	44	72	64	86	17

LEAD.	GEAR ON WORM.	1ST. INTERMEDIATE.	2ND. INTERMEDIATE.	GEAR ON SCREW.	ANGLE.
4.350	28	48	56	72	16½
4.351	32	40	48	86	13
4.352	56	48	28	64	31½
4.353	44	64	56	86	13½
4.354	32	56	64	72	31
4.355	28	56	64	72	11½
4.356	56	40	32	100	13½
4.357	28	40	48	72	21
4.358	86	64	28	72	33½
4.359	32	44	56	86	23
4.360	32	44	56	86	23
4.361	44	72	64	86	16½
4.362	44	64	56	86	13
4.363	28	56	64	72	11
4.364	40	44	56	86	42½
4.365	56	40	32	100	13
4.366	40	48	44	72	31
4.367	32	40	48	86	12
4.368	44	56	48	72	33½
4.369	72	56	24	64	25
4.370	56	40	28	86	16½
4.371	28	40	48	72	20½
4.372	28	40	48	72	20½
4.373	32	48	56	72	32½
4.374	56	40	32	100	12½
4.375	32	44	56	86	22½
4.376	32	44	56	86	22½
4.377	56	44	24	64	23½
4.378	64	44	32	86	36
4.379	44	64	56	86	12
4.380	48	72	64	86	28
4.381	56	40	28	86	16
4.382	28	48	56	72	15
4.383	44	64	48	72	17
4.384	40	56	48	72	23
4.385	40	48	64	86	45
4.386	28	40	48	72	20
4.387	44	64	56	86	11½
4.388	48	64	40	56	35
4.389	64	40	32	86	42½
4.390	56	40	32	100	11½
4.391	32	44	56	86	22
4.392	56	40	28	86	15½
4.393	44	72	64	86	15
4.394	44	64	48	72	16½
4.395	44	64	56	86	11
4.396	32	44	56	72	39
4.397	32	40	48	86	10
4.398	56	40	32	100	11
4.399	28	40	48	72	19½
4.400	40	56	48	72	22½
4.401	44	48	56	86	42½
4.402	28	48	56	72	14
4.403	56	40	28	86	15
4.404	64	48	32	72	42
4.405	44	64	48	72	16
4.406	32	44	56	86	21½
4.407	32	44	56	86	21½
4.408	48	64	56	86	25½
4.409	44	64	56	86	10
4.410	56	44	24	64	22½
4.411	32	44	48	72	24½
4.412	28	48	56	72	13½
4.413	28	40	48	72	19
4.414	48	64	44	56	41½
4.415	40	56	48	72	22
4.416	44	64	48	72	15½
4.417	56	40	32	86	32
4.418	44	56	48	72	32½
4.419	56	40	32	100	9½
4.420	48	72	64	86	27
4.421	32	44	56	86	21
4.422	56	40	28	86	14
4.423	56	40	28	86	14
4.424	40	48	64	86	44½
4.425	64	40	32	86	42
4.426	28	40	48	72	18½
4.427	44	64	48	72	15
4.428	32	44	56	72	38½
4.429	28	48	56	72	12½
4.430	28	48	56	72	12½
4.431	44	72	64	86	13
4.432	56	40	28	86	13½
4.433	40	48	44	72	29½
4.434	40	44	56	86	41½
4.435	48	64	56	72	40½
4.436	32	44	56	86	20½
4.437	44	64	48	72	14½
4.438	28	48	56	72	12
4.439	28	40	48	72	18
4.440	44	72	64	86	12½
4.441	56	40	28	86	13
4.442	56	48	28	64	29½
4.443	32	56	64	72	29
4.444	48	64	56	86	24½
4.445	56	48	44	100	30
4.446	28	48	56	72	11½
4.447	44	64	48	72	14
4.448	48	64	44	56	41
4.449	44	72	64	86	12
4.450	32	44	56	86	20
4.451	28	40	48	72	17½
4.452	44	64	56	86	6
4.453	28	48	56	72	11
4.454	28	48	56	72	11
4.455	86	56	24	72	29½
4.456	44	64	48	72	13½
4.457	44	72	64	86	11½
4.458	56	40	28	86	12
4.459	64	40	32	86	41½
4.460	40	56	48	72	20½
4.461	28	48	56	72	10½
4.462	48	64	56	86	24
4.463	28	40	48	72	17
4.464	32	44	56	86	19½
4.465	44	64	48	72	13
4.466	44	64	48	72	13
4.467	56	44	28	72	25½
4.468	28	48	56	72	10
4.469	40	44	48	72	42½
4.470	44	48	56	86	41½
4.471	44	48	56	86	41½
4.472	44	72	64	86	10½
4.473	86	48	24	72	41½
4.474	44	64	48	72	12½
4.475	28	40	48	72	16½
4.476	40	48	44	72	28½
4.477	86	56	24	72	29
4.478	32	44	56	86	19
4.479	44	72	64	86	10
4.480	40	44	48	86	28
4.481	48	64	44	56	40½
4.482	56	40	28	86	10½
4.483	44	64	48	72	12
4.484	32	40	44	72	23½
4.485	56	44	28	72	25
4.486	28	40	48	72	16
4.487	64	44	32	86	34
4.488	56	40	32	86	30½
4.489	56	40	28	86	10
4.490	32	48	56	72	30
4.491	32	44	56	86	18½
4.492	72	48	24	64	37
4.493	64	40	32	86	41
4.494	64	40	32	86	41
4.495	32	44	48	72	22
4.496	48	64	56	86	23
4.497	28	40	48	72	15½
4.498	56	72	64	86	39
4.499	56	44	24	64	19½

LEAD.	GEAR ON WORM.	1ST. INTERMEDIATE.	2ND. INTERMEDIATE.	GEAR ON SCREW.	ANGLE.	LEAD.	GEAR ON WORM.	1ST. INTERMEDIATE.	2ND. INTERMEDIATE.	GEAR ON SCREW.	ANGLE.	LEAD.	GEAR ON WORM.	1ST. INTERMEDIATE.	2ND. INTERMEDIATE.	GEAR ON SCREW.	ANGLE.
4.500	56	44	32	64	45	4.550	48	72	64	86	23½	4.600	40	56	48	72	15
4.501	48	64	56	72	39½	4.551	72	48	24	64	36	4.601	40	44	56	86	39
4.502	40	44	56	86	40½	4.552	32	44	56	86	16	4.602	40	48	56	86	32
4.503	64	48	24	56	38	4.553	32	44	56	86	16	4.603	44	56	48	72	28½
4.504	32	44	56	86	18	4.554	40	56	48	72	17	4.604	48	64	56	86	19½
4.505	56	44	28	64	36	4.555	56	44	28	72	23	4.605	32	44	56	86	13½
4.506	44	64	48	72	10½	4.556	28	40	48	72	12½	4.606	44	48	56	86	39½
4.507	86	48	24	72	41	4.557	32	48	56	72	28½	4.607	44	56	64	86	38
4.508	28	40	48	72	15	4.558	72	56	24	64	19	4.608	86	48	24	72	39½
4.509	44	64	56	72	32½	4.559	44	56	48	72	29½	4.609	32	40	44	72	19½
4.510	44	64	56	72	32½	4.560	48	64	56	86	21	4.610	40	56	48	72	14½
4.511	32	44	48	72	21½	4.561	64	40	32	86	40	4.611	32	44	48	72	18
4.512	44	56	64	86	39½	4.562	44	40	48	86	42	4.612	48	64	44	56	38½
4.513	44	64	48	72	10	4.563	64	48	24	56	37	4.613	56	48	44	100	26
4.514	48	64	44	56	40	4.564	32	44	56	86	15½	4.614	32	44	56	86	13
4.515	48	64	44	56	40	4.565	28	40	48	72	12	4.615	32	44	56	86	13
4.516	40	56	48	72	18½	4.566	40	56	48	72	16½	4.616	48	72	64	86	21½
4.517	32	44	56	86	17½	4.567	48	72	64	86	23	4.617	40	44	48	86	24½
4.518	28	40	48	72	14½	4.568	40	44	56	86	39½	4.618	48	64	56	86	19
4.519	28	40	48	72	14½	4.569	86	56	24	64	37½	4.619	32	40	48	72	30
4.520	86	56	24	72	28	4.570	32	44	48	72	19½	4.620	40	56	48	72	14
4.521	56	44	28	72	24	4.571	86	64	28	72	29	4.621	40	56	48	72	14
4.522	72	48	24	64	36½	4.572	44	48	56	86	40	4.622	56	72	64	86	37
4.523	40	64	56	72	21½	4.573	28	40	48	72	11½	4.623	56	72	64	86	37
4.524	72	44	24	64	42½	4.574	32	44	56	86	15	4.624	32	44	56	86	12½
4.525	40	48	56	86	33½	4.575	32	44	56	86	15	4.625	44	56	48	72	28
4.526	56	44	24	64	18½	4.576	44	56	64	86	38½	4.626	56	48	28	64	25
4.527	64	40	32	86	40½	4.577	32	44	56	72	36	4.627	64	40	32	86	39
4.528	28	40	48	72	14	4.578	40	56	48	72	16	4.628	48	64	56	72	37½
4.529	32	44	56	86	17	4.579	72	48	24	64	35½	4.629	86	56	24	64	36½
4.530	56	72	64	86	38½	4.580	48	64	44	56	39	4.630	86	56	24	64	36½
4.531	64	44	32	72	45½	4.581	28	40	48	72	11	4.631	40	56	48	72	13½
4.532	48	72	64	86	24	4.582	40	64	56	72	19½	4.632	32	44	56	86	12
4.533	48	64	56	72	39	4.583	48	72	64	86	22½	4.633	32	44	56	86	12
4.534	56	40	32	86	29½	4.584	32	44	48	72	19	4.634	32	44	56	72	35
4.535	40	44	56	86	40	4.585	32	44	56	86	14½	4.635	40	44	48	86	24
4.536	44	56	48	72	30	4.586	72	56	32	64	44½	4.636	72	48	24	64	34½
4.537	44	56	48	72	30	4.587	56	48	28	64	26	4.637	64	48	32	72	38½
4.538	28	40	48	72	13½	4.588	56	44	24	64	16	4.638	64	48	32	72	38½
4.539	44	48	56	86	40½	4.589	28	40	48	72	10½	4.639	44	48	56	86	39
4.540	64	48	32	72	40	4.590	48	64	56	86	20	4.640	40	56	48	72	13
4.541	32	44	56	86	16½	4.591	56	40	28	72	32½	4.641	32	44	56	86	11½
4.542	40	56	48	72	17½	4.592	56	72	64	86	37½	4.642	32	40	48	72	29½
4.543	48	64	40	56	32	4.593	64	48	24	56	36½	4.643	40	44	48	72	40
4.544	44	56	64	86	39	4.594	64	40	32	86	39½	4.644	48	64	44	56	38
4.545	72	56	24	64	19½	4.595	32	44	56	86	14	4.645	48	64	56	86	18
4.546	32	56	64	72	26½	4.596	28	40	48	72	10	4.646	72	56	24	64	15½
4.547	28	40	48	72	13	4.597	48	64	56	72	38	4.647	48	72	64	86	20½
4.548	32	44	56	72	36½	4.598	72	56	24	64	17½	4.648	32	44	48	72	16½
4.549	32	40	44	72	21½	4.599	86	56	24	64	37	4.649	32	44	56	86	11

LEAD.	GEAR ON WORM.	1ST. INTERMEDIATE.	2ND. INTERMEDIATE.	GEAR ON SCREW.	ANGLE.
4.650	32	40	44	72	18
4.651	56	44	24	64	13
4.652	64	48	24	56	35½
4.653	56	72	64	86	36½
4.654	44	64	56	72	29½
4.655	56	44	32	64	43
4.656	86	64	28	72	27
4.657	32	44	56	86	10½
4.658	48	64	56	72	37
4.659	48	64	56	72	37
4.660	64	40	32	86	38½
4.661	40	64	56	72	16½
4.662	32	44	56	72	34½
4.663	72	48	24	64	34
4.664	32	44	56	86	10
4.665	40	44	56	86	38
4.666	40	56	48	72	11½
4.667	72	56	24	64	14½
4.668	72	56	24	64	14½
4.669	56	44	24	64	12
4.670	64	48	32	72	38
4.671	44	48	56	86	38½
4.672	32	44	48	72	15½
4.673	40	64	56	72	16
4.674	86	48	24	72	38½
4.675	48	64	44	56	37½
4.676	32	40	44	72	17
4.677	56	44	24	64	11½
4.678	72	56	24	64	14
4.679	56	44	28	72	19
4.680	64	48	24	56	35
4.681	64	48	24	56	35
4.682	40	56	48	72	10½
4.683	56	72	64	86	36
4.684	40	64	56	72	15½
4.685	56	44	24	64	11
4.686	86	44	24	72	44
4.687	32	40	48	72	28½
4.688	86	56	24	64	35½
4.689	48	64	56	72	36½
4.690	32	44	56	72	34
4.691	72	48	24	64	33½
4.692	64	40	32	86	38
4.693	56	44	24	64	10½
4.694	32	44	48	72	14½
4.695	40	64	56	72	15
4.696	56	44	28	64	32½
4.697	40	44	56	86	37½
4.698	72	56	24	64	13
4.699	32	40	44	72	16
4.700	44	56	64	86	36½
4.701	64	48	32	72	37½
4.702	64	48	32	72	37½
4.703	44	40	48	86	40
4.704	44	48	56	86	38
4.705	48	72	64	86	18½
4.706	86	48	24	72	38
4.707	48	64	44	56	37
4.708	44	56	48	72	26
4.709	64	48	24	56	34½
4.710	32	56	64	72	22
4.711	32	40	44	72	15½
4.712	56	72	64	86	35½
4.713	56	44	48	100	39½
4.714	32	44	48	72	13½
4.715	56	48	28	64	22½
4.716	72	56	24	64	12
4.717	86	56	24	64	35
4.718	86	56	24	64	35
4.719	48	64	56	72	36
4.720	56	44	28	72	17½
4.721	40	44	48	86	21½
4.722	32	40	44	72	15
4.723	40	48	56	86	29½
4.724	64	40	32	86	37½
4.725	56	48	44	100	23
4.726	56	40	28	64	39½
4.727	40	64	56	72	13½
4.728	40	44	56	86	37
4.729	48	64	56	86	14½
4.730	44	56	64	86	36
4.731	48	72	64	86	17½
4.732	72	56	24	64	11
4.733	64	48	32	72	37
4.734	64	44	32	86	29
4.735	44	48	56	86	37½
4.736	44	48	56	86	37½
4.737	48	64	44	56	36½
4.738	86	48	24	72	37½
4.739	48	64	56	86	14
4.740	72	56	24	64	10½
4.741	56	72	64	86	35
4.742	32	44	48	72	12
4.743	32	56	64	72	21
4.744	32	44	56	72	33
4.745	56	44	28	72	16½
4.746	86	56	24	64	34½
4.747	44	56	48	72	25
4.748	72	56	24	64	10
4.749	48	64	56	72	35½
4.750	32	44	48	72	11½
4.751	32	44	48	72	11½
4.752	32	40	48	72	27
4.753	40	44	48	86	20½
4.754	32	40	44	72	13½
4.755	64	40	32	86	37
4.756	86	64	28	72	24½
4.757	56	44	28	72	16
4.758	32	56	64	72	20½
4.759	40	44	56	86	36½
4.760	44	56	64	86	35½
4.761	56	40	28	72	29
4.762	56	40	28	72	29
4.763	40	64	56	72	11½
4.764	64	48	32	72	36½
4.765	64	48	24	56	33½
4.766	44	56	48	72	24½
4.767	44	48	56	86	37
4.768	48	64	44	56	36
4.769	86	48	24	72	37
4.770	86	48	24	72	37
4.771	32	44	56	72	32½
4.772	40	64	56	72	11
4.773	32	40	44	72	12½
4.774	86	56	24	64	34
4.775	86	56	24	64	34
4.776	56	48	44	100	21½
4.777	48	64	56	86	12
4.778	48	64	56	72	35
4.779	86	56	24	72	21
4.780	40	64	56	72	10½
4.781	48	72	64	86	15½
4.782	32	40	44	72	12
4.783	40	44	48	86	19½
4.784	56	40	28	72	28½
4.785	44	56	48	72	24
4.786	64	40	32	86	36½
4.787	40	64	56	72	10
4.788	32	56	64	72	19½
4.789	40	44	56	86	36
4.790	44	56	64	86	35
4.791	32	40	44	72	11½
4.792	64	48	24	56	33
4.793	86	64	28	72	23½
4.794	64	48	32	72	36
4.795	86	56	24	72	20½
4.796	72	48	24	64	31½
4.797	32	44	56	72	32
4.798	44	48	56	86	36½
4.799	56	72	64	86	34

LEAD.	GEAR ON WORM.	1ST. INTERMEDIATE.	2ND. INTERMEDIATE.	GEAR ON SCREW.	ANGLE.	LEAD.	GEAR ON WORM.	1ST. INTERMEDIATE.	2ND. INTERMEDIATE.	GEAR ON SCREW.	ANGLE.	LEAD.	GEAR ON WORM.	1ST. INTERMEDIATE.	2ND. INTERMEDIATE.	GEAR ON SCREW.	ANGLE.
4.800	64	44	32	86	27½	4.850	56	44	28	72	11½	4.900	72	44	24	64	37
4.801	86	48	24	72	36½	4.851	56	40	28	72	27	4.901	40	44	48	86	15
4.802	86	56	24	64	33½	4.852	48	72	64	86	12	4.902	32	48	56	72	19
4.803	86	56	24	64	33½	4.853	48	72	64	86	12	4.903	32	48	56	72	19
4.804	44	56	48	72	23½	4.854	64	48	32	72	35	4.904	44	56	64	86	33
4.805	44	40	48	86	38½	4.855	86	56	24	72	18½	4.905	64	44	32	86	25
4.806	44	64	56	72	26	4.856	48	64	44	56	34½	4.906	56	48	28	64	16
4.807	48	64	56	72	34½	4.857	48	64	44	56	34½	4.907	64	40	32	86	34½
4.808	56	48	44	100	20½	4.858	56	44	28	72	11	4.908	40	44	56	86	34
4.809	40	44	48	72	37½	4.859	44	48	56	86	35½	4.909	56	72	64	86	32
4.810	48	64	56	86	10	4.860	44	48	56	86	35½	4.910	86	56	24	64	31½
4.811	56	48	28	64	19½	4.861	48	72	64	86	11½	4.911	86	56	24	64	31½
4.812	56	44	28	72	13½	4.862	86	48	24	72	35½	4.912	40	44	48	86	14½
4.813	48	72	64	86	14	4.863	56	40	32	86	21	4.913	64	48	32	72	34
4.814	48	72	64	86	14	4.864	48	64	56	72	33½	4.914	48	64	44	56	33½
4.815	32	40	44	72	10	4.865	40	44	48	86	16½	4.915	72	48	28	64	41½
4.816	40	48	44	72	19	4.866	56	44	28	72	10½	4.916	56	44	28	64	28
4.817	64	40	32	86	36	4.867	40	44	64	86	44	4.917	32	48	56	72	18½
4.818	44	56	64	86	34½	4.868	56	48	28	64	17½	4.918	32	56	64	72	14½
4.819	40	44	56	86	35½	4.869	86	56	24	72	18	4.919	44	48	56	86	34½
4.820	40	44	56	86	35½	4.870	48	72	64	86	11	4.920	48	64	56	72	32½
4.821	72	48	24	64	31	4.871	72	48	24	64	30	4.921	86	56	24	72	16
4.822	72	48	24	64	31	4.872	64	48	24	56	31½	4.922	86	48	24	72	34½
4.823	32	44	56	72	31½	4.873	44	56	48	72	21½	4.923	64	48	24	56	30½
4.824	64	48	32	72	35½	4.874	32	44	56	72	30½	4.924	32	44	56	72	29½
4.825	64	48	32	72	35½	4.875	40	56	64	86	23½	4.925	56	40	32	86	19
4.826	40	44	48	86	18	4.876	44	56	64	86	33½	4.926	86	64	28	72	19½
4.827	48	64	44	56	35	4.877	64	40	32	86	35	4.927	32	40	48	72	22½
4.828	86	64	28	72	22½	4.878	48	72	64	86	10½	4.928	40	48	56	72	40½
4.829	44	48	56	86	36	4.879	40	44	56	86	34½	4.929	32	56	64	72	14
4.830	86	56	24	64	33	4.880	86	44	24	72	41½	4.930	56	48	28	64	15
4.831	86	48	24	72	36	4.881	56	72	64	86	32½	4.931	44	56	64	86	32½
4.832	86	48	24	72	36	4.882	86	56	24	72	17½	4.932	72	44	24	64	36½
4.833	32	40	48	72	25	4.883	32	56	64	72	16	4.933	86	56	24	72	15½
4.834	48	72	64	86	13	4.884	86	56	24	64	32	4.934	40	44	48	86	13½
4.835	48	64	40	56	25½	4.885	48	64	44	56	34	4.935	56	72	64	86	31½
4.836	48	64	56	72	34	4.886	48	64	44	56	34	4.936	64	40	32	86	34
4.837	40	56	64	86	24½	4.887	56	40	44	100	37½	4.937	56	32	28	72	43½
4.838	56	48	44	100	19½	4.888	32	48	56	72	19½	4.938	44	56	48	72	19½
4.839	40	44	48	86	17½	4.889	44	48	56	86	35	4.939	32	56	64	72	13½
4.840	56	48	28	64	18½	4.890	44	48	56	86	35	4.940	32	56	64	72	13½
4.841	56	44	28	72	12	4.891	32	40	48	72	23½	4.941	56	48	28	64	14½
4.842	64	44	32	72	41½	4.892	86	48	24	72	35	4.942	64	48	32	72	33½
4.843	48	72	64	86	12½	4.893	40	56	64	86	23	4.943	72	48	24	64	28½
4.844	48	72	64	86	12½	4.894	56	48	28	64	16½	4.944	40	44	48	86	13
4.845	32	56	64	72	17½	4.895	32	56	64	72	15½	4.945	86	56	24	72	15
4.846	64	48	24	56	32	4.896	72	48	24	64	29½	4.946	56	48	44	100	15½
4.847	64	40	32	86	35½	4.897	40	48	56	86	25½	4.947	48	64	56	72	32
4.848	64	40	32	86	35½	4.898	64	48	24	56	31	4.948	44	48	56	86	34
4.849	40	44	56	86	35	4.899	32	44	56	72	30	4.949	64	48	24	56	30

LEAD.	GEAR ON WORM.	1ST. INTERMEDIATE.	2ND. INTERMEDIATE.	GEAR ON SCREW.	ANGLE.
4.950	32	56	64	72	13
4.951	86	48	24	72	34
4.952	40	48	44	72	13½
4.953	44	56	48	72	19
4.954	40	44	48	86	12½
4.955	56	40	28	64	36
4.956	86	56	24	72	14½
4.957	40	48	56	86	24
4.958	44	56	64	86	32
4.959	44	56	64	86	32
4.960	32	56	64	72	12½
4.961	56	72	64	86	31
4.962	86	56	24	64	30½
4.963	40	44	48	86	12
4.964	72	44	24	64	36
4.965	64	40	32	86	33½
4.966	72	48	24	64	28
4.967	72	48	24	64	28
4.968	56	40	32	86	17½
4.969	32	56	64	72	12
4.970	64	48	32	72	33
4.971	32	44	56	72	28½
4.972	40	44	48	86	11½
4.973	48	64	56	72	31½
4.974	48	64	56	72	31½
4.975	44	64	56	72	21½
4.976	40	48	56	86	23½
4.977	44	48	56	86	33½
4.978	44	48	56	86	33½
4.979	40	56	64	86	20½
4.980	86	48	24	72	33½
4.981	40	44	48	86	11
4.982	40	48	44	72	12
4.983	56	48	28	64	12½
4.984	32	48	56	72	16
4.985	44	56	64	86	31½
4.986	56	40	28	64	35½
4.987	56	72	64	86	30½
4.988	86	56	24	64	30
4.989	72	48	24	64	27½
4.990	72	48	24	64	27½
4.991	40	48	44	72	11½
4.992	56	48	28	64	12
4.993	64	40	32	86	33
4.994	64	40	32	86	33
4.995	32	44	56	72	28
4.996	32	48	56	72	15½
4.997	48	64	44	56	32
4.998	64	48	32	72	32½
4.999	40	48	44	72	11
5.000	48	64	56	72	31
5.001	56	48	28	64	11½
5.002	56	48	44	100	13
5.003	32	56	64	72	10
5.004	56	44	28	64	26
5.005	56	44	28	64	26
5.006	44	48	56	86	33
5.007	86	56	24	72	12
5.008	86	48	24	72	33
5.009	86	48	24	72	33
5.010	56	48	28	64	11
5.011	56	48	44	100	12½
5.012	44	56	64	86	31
5.013	56	72	64	86	30
5.014	56	44	32	64	38
5.015	40	48	44	72	10
5.016	40	48	44	72	10
5.017	56	40	28	64	35
5.018	32	44	56	72	27½
5.019	56	48	28	64	10½
5.020	40	44	56	86	32
5.021	64	40	32	86	32½
5.022	64	40	32	86	32½
5.023	86	64	28	72	16
5.024	86	64	28	72	16
5.025	64	48	32	72	32
5.026	64	48	32	72	32
5.027	56	48	28	64	10
5.028	72	48	28	64	40
5.029	44	40	48	86	35
5.030	56	48	44	100	11½
5.031	32	48	56	72	14
5.032	56	40	32	86	15
5.033	86	56	24	72	10½
5.034	44	48	56	86	32½
5.035	44	56	48	72	16
5.036	86	64	28	72	15½
5.037	86	48	24	72	32½
5.038	44	56	64	86	30½
5.039	56	48	44	100	11
5.040	32	44	56	72	27
5.041	32	44	56	72	27
5.042	32	48	56	72	13½
5.043	56	40	32	86	14½
5.044	64	44	24	56	36
5.045	64	48	24	56	28
5.046	56	44	28	64	25
5.047	56	48	44	100	10½
5.048	40	44	56	86	31½
5.049	64	40	32	86	32
5.050	48	64	40	56	19½
5.051	48	64	44	56	31
5.052	48	64	56	72	30
5.053	64	48	32	72	31½
5.054	56	40	32	86	14
5.055	56	48	44	100	10
5.056	72	48	24	64	26
5.057	32	40	48	72	18½
5.058	56	32	28	72	42
5.059	86	64	28	72	14½
5.060	86	64	28	72	14½
5.061	86	56	24	64	28½
5.062	44	48	56	86	32
5.063	32	44	56	72	26½
5.064	86	48	24	72	32
5.065	86	48	24	72	32
5.066	40	48	56	86	21
5.067	56	44	28	64	24½
5.068	64	48	24	56	27½
5.069	64	44	32	86	20½
5.070	40	56	64	86	17½
5.071	86	64	28	72	14
5.072	32	48	56	72	12
5.073	40	48	56	72	38½
5.074	40	44	56	86	31
5.075	40	44	56	86	31
5.076	64	44	24	56	35½
5.077	64	40	32	86	31½
5.078	48	64	44	56	30½
5.079	64	48	32	72	31
5.080	64	48	32	72	31
5.081	32	48	56	72	11½
5.082	86	64	28	72	13½
5.083	44	56	48	72	14
5.084	32	44	56	72	26
5.085	86	56	24	64	28
5.086	56	40	32	86	12½
5.087	56	72	64	86	28½
5.088	44	56	64	86	29½
5.089	44	48	56	86	31½
5.090	32	48	56	72	11
5.091	64	48	24	56	27
5.092	86	48	24	72	31½
5.093	44	56	48	72	13½
5.094	56	44	48	100	33½
5.095	56	40	32	86	12
5.096	86	48	28	72	43
5.097	40	56	64	86	16½
5.098	72	48	24	64	25
5.099	44	64	56	72	17½

LEAD.	GEAR ON WORM.	1ST. INTERMEDIATE.	2ND. INTERMEDIATE.	GEAR ON SCREW.	ANGLE.	LEAD	GEAR ON WORM.	1ST. INTERMEDIATE.	2ND. INTERMEDIATE.	GEAR ON SCREW.	ANGLE.	LEAD.	GEAR ON WORM.	1ST. INTERMEDIATE.	2ND. INTERMEDIATE.	GEAR ON SCREW.	ANGLE.
5.100	32	40	48	72	17	5.150	48	64	56	72	28	5.200	64	48	24	56	24½
5.101	40	44	56	86	30½	5.151	32	40	48	72	15	5.201	40	48	64	86	33
5.102	48	64	56	72	29	5.152	40	44	56	86	29½	5.202	56	72	64	86	26
5.103	48	64	44	56	30	5.153	40	44	56	86	29½	5.203	40	44	56	86	28½
5.104	64	40	32	86	31	5.154	48	64	44	56	29	5.204	72	44	24	64	32
5.105	40	44	64	86	41	5.155	86	40	24	72	44	5.205	64	32	28	72	48
5.106	64	48	32	72	30½	5.156	64	40	32	86	30	5.206	32	40	48	72	12½
5.107	56	40	28	64	33½	5.157	56	72	64	86	27	5.207	64	40	32	86	29
5.108	86	56	24	64	27½	5.158	64	48	32	72	29½	5.208	64	40	32	86	29
5.109	48	64	40	56	17½	5.159	72	48	24	64	23½	5.209	40	56	64	86	11½
5.110	56	72	64	86	28	5.160	40	48	56	86	18	5.210	44	56	64	86	27
5.111	56	72	64	86	28	5.161	64	44	32	86	17½	5.211	72	44	24	56	42
5.112	86	64	28	72	12	5.162	48	64	40	56	15½	5.212	72	44	24	56	42
5.113	56	40	32	86	11	5.163	44	56	64	86	28	5.213	56	44	32	64	35
5.114	44	56	64	86	29	5.164	44	64	56	72	15	5.214	56	32	28	72	40
5.115	40	48	56	86	19½	5.165	44	64	56	72	15	5.215	72	48	24	64	22
5.116	44	48	56	86	31	5.166	56	40	28	64	32½	5.216	72	48	24	64	22
5.117	64	44	32	86	19	5.167	56	40	44	100	33	5.217	64	56	28	48	38½
5.118	72	48	24	64	24½	5.168	32	44	56	72	24	5.218	40	56	64	86	11
5.119	86	48	24	72	31	5.169	44	48	56	86	30	5.219	86	56	24	64	25
5.120	44	40	48	86	33½	5.170	72	44	24	56	42½	5.220	48	64	56	72	26½
5.121	86	64	28	72	11½	5.171	72	44	24	56	42½	5.221	44	48	56	86	29
5.122	56	40	32	86	10½	5.172	86	48	24	72	30	5.222	40	44	48	72	30½
5.123	44	56	48	72	12	5.173	48	64	56	72	27½	5.223	86	48	24	72	29
5.124	44	56	48	72	12	5.174	48	64	56	72	27½	5.224	56	72	64	86	25½
5.125	56	44	28	64	23	5.175	32	40	48	72	14	5.225	48	56	64	86	35
5.126	48	64	56	72	28½	5.176	86	56	24	64	26	5.226	32	44	56	72	22½
5.127	40	44	56	86	30	5.177	44	64	56	72	14½	5.227	40	44	56	86	28
5.128	64	40	28	72	34½	5.178	40	44	56	86	29	5.228	64	44	32	86	15
5.129	48	64	44	56	29½	5.179	48	64	44	56	28½	5.229	40	48	56	86	15½
5.130	64	40	32	86	30½	5.180	56	72	64	86	26½	5.230	44	64	56	72	12
5.131	86	56	24	64	27	5.181	56	44	28	64	21½	5.231	40	48	64	86	32½
5.132	64	48	32	72	30	5.182	64	40	32	86	29½	5.232	64	40	32	86	28½
5.133	44	56	48	72	11½	5.183	64	48	32	72	29	5.233	64	40	32	86	28½
5.134	56	72	64	86	27½	5.184	86	44	24	64	45	5.234	72	48	24	64	21½
5.135	40	56	64	86	15	5.185	56	40	48	100	39½	5.235	40	56	64	86	10
5.136	64	48	24	56	26	5.186	44	56	64	86	27½	5.236	56	44	48	100	31
5.137	56	40	28	64	33	5.187	44	48	64	86	40½	5.237	56	44	48	100	31
5.138	44	56	64	86	28½	5.188	32	44	56	72	23½	5.238	48	44	56	86	42½
5.139	72	48	24	64	24	5.189	64	44	32	86	16½	5.239	44	40	56	86	43
5.140	40	44	48	72	32	5.190	40	56	64	86	12½	5.240	86	56	24	64	24½
5.141	40	48	64	86	34	5.191	40	48	64	72	45½	5.241	86	56	24	64	24½
5.142	44	56	48	72	11	5.192	56	40	28	72	17½	5.242	72	48	28	64	37
5.143	44	48	56	86	30½	5.193	48	56	64	86	35½	5.243	48	64	56	72	26
5.144	40	44	64	86	40½	5.194	56	40	28	64	32	5.244	32	40	48	72	10½
5.145	40	48	56	86	18½	5.195	44	48	56	86	29½	5.245	32	44	56	72	22
5.146	86	48	24	72	30½	5.196	32	40	48	72	13	5.246	44	48	56	86	28½
5.147	86	64	28	72	10	5.197	48	64	56	72	27	5.247	64	40	28	72	32½
5.148	32	44	56	72	24½	5.198	86	48	24	72	29½	5.248	86	48	24	72	28½
5.149	48	64	40	56	16	5.199	64	48	24	56	24½	5.249	44	64	56	72	11

LEAD.	GEAR ON WORM.	1ST. INTERMEDIATE.	2ND. INTERMEDIATE.	GEAR ON SCREW.	ANGLE.
5.250	56	40	28	64	31
5.251	40	44	56	86	27½
5.252	32	40	48	72	10
5.253	40	48	56	86	14½
5.254	64	56	28	48	38
5.255	44	56	64	86	26
5.256	64	48	32	72	27½
5.257	64	40	32	86	28
5.258	44	64	56	72	10½
5.259	48	64	40	56	11
5.260	64	48	24	56	23
5.261	86	56	24	64	24
5.262	64	44	32	86	13½
5.263	32	44	56	72	21½
5.264	32	44	56	72	21½
5.265	48	64	56	72	25½
5.266	44	64	56	72	10
5.267	56	72	64	86	24½
5.268	72	48	24	64	20½
5.269	72	48	24	64	20½
5.270	44	48	56	86	28
5.271	56	40	28	72	14½
5.272	86	44	24	64	44
5.273	86	48	24	72	28
5.274	48	64	44	56	26½
5.275	40	44	56	86	27
5.276	48	64	40	56	10
5.277	44	56	64	86	25½
5.278	56	40	28	64	30½
5.279	64	48	24	56	22½
5.280	64	48	32	72	27
5.281	64	40	32	86	27½
5.282	56	40	28	72	14
5.283	72	40	24	64	38½
5.284	64	44	32	86	12½
5.285	64	40	32	72	42
5.286	48	64	56	72	25
5.287	48	64	56	72	25
5.288	56	72	64	86	24
5.289	48	56	64	86	34
5.290	56	44	48	100	30
5.291	56	44	48	100	30
5.292	72	44	24	56	41
5.293	72	44	24	56	41
5.294	44	48	56	86	27½
5.295	44	48	56	86	27½
5.296	56	44	28	64	18
5.297	86	48	24	72	27½
5.298	40	44	56	86	26½
5.299	44	56	64	86	25
5.300	40	44	48	72	29
5.301	86	56	24	64	23
5.302	72	48	24	64	19½
5.303	64	48	32	72	26½
5.304	56	40	28	72	13
5.305	64	40	32	86	27
5.306	64	40	28	72	31½
5.307	40	48	56	86	12
5.308	48	64	56	72	24½
5.309	40	48	56	72	35
5.310	56	44	28	64	17½
5.311	44	56	64	72	40½
5.312	64	44	32	86	11
5.313	64	44	32	86	11
5.314	72	44	24	64	30
5.315	56	40	28	72	12½
5.316	64	48	24	56	21½
5.317	40	48	56	86	11½
5.318	44	48	56	86	27
5.319	48	64	44	56	25½
5.320	44	56	64	86	24½
5.321	86	48	24	72	27
5.322	64	44	32	86	10½
5.323	44	40	56	86	42
5.324	86	64	40	72	44½
5.325	56	40	28	72	12
5.326	64	48	32	72	26
5.327	40	44	48	72	28½
5.328	64	40	32	86	26½
5.329	64	40	32	86	26½
5.330	64	44	32	86	10
5.331	56	40	28	64	29½
5.332	56	40	48	100	37½
5.333	32	44	56	72	19½
5.334	64	48	24	56	21
5.335	64	48	24	56	21
5.336	40	44	56	72	41
5.337	40	44	56	72	41
5.338	86	48	28	72	40
5.339	56	44	28	64	16½
5.340	86	56	24	64	22
5.341	48	64	44	56	25
5.342	44	48	56	86	26½
5.343	40	44	56	86	25½
5.344	86	48	24	72	26½
5.345	86	48	24	72	26½
5.346	86	48	28	64	47
5.347	56	72	64	86	22½
5.348	56	72	64	86	22½
5.349	32	44	56	72	19
5.350	72	48	24	64	18
5.351	64	40	32	86	26
5.352	64	40	32	86	26
5.353	56	40	28	72	10½
5.354	40	56	64	72	32½
5.355	40	56	64	72	32½
5.356	72	40	24	54	37½
5.357	56	40	28	64	29
5.358	86	56	24	64	21½
5.359	64	56	28	48	36½
5.360	64	44	32	72	34
5.361	56	40	28	72	10
5.362	48	64	44	56	24½
5.363	44	40	48	72	43
5.364	72	48	24	64	17½
5.365	44	48	56	86	26
5.366	56	44	28	64	15½
5.367	56	72	64	86	22
5.368	86	48	24	72	26
5.369	48	64	56	72	23
5.370	64	48	24	56	20
5.371	64	48	32	72	25
5.372	72	44	24	56	40
5.373	40	48	64	72	43½
5.374	64	40	32	86	25½
5.375	86	44	28	72	45
5.376	56	64	40	48	42½
5.377	86	56	24	64	21
5.378	86	56	32	72	38
5.379	72	48	24	64	17
5.380	32	44	56	72	18
5.381	44	48	56	72	41
5.382	44	56	64	86	23
5.383	48	64	44	56	24
5.384	48	64	44	56	24
5.385	56	72	64	86	21½
5.386	64	48	24	56	19½
5.387	44	48	56	86	25½
5.388	44	48	56	86	25½
5.389	48	64	56	72	22½
5.390	86	48	24	72	25½
5.391	56	44	28	64	14½
5.392	64	48	32	72	24½
5.393	72	48	24	64	16½
5.394	86	56	24	64	20½
5.395	32	44	56	72	17½
5.396	64	40	32	86	25
5.397	56	44	32	64	32
5.398	40	48	64	86	29½
5.399	64	44	24	56	30

LEAD.	GEAR ON WORM.	1ST. INTERMEDIATE.	2ND. INTERMEDIATE.	GEAR ON SCREW.	ANGLE.
5.400	56	32	28	72	37½
5.401	56	40	32	64	39½
5.402	44	56	64	86	22½
5.403	56	72	64	86	21
5.404	48	64	44	56	23½
5.405	64	44	28	56	42
5.406	44	40	56	86	41
5.407	64	40	32	72	40½
5.408	40	44	56	86	24
5.409	86	40	24	72	41
5.410	44	48	56	86	25
5.411	72	44	24	56	39½
5.412	86	48	24	72	25
5.413	86	48	24	72	25
5.414	64	48	32	72	24
5.415	86	64	40	72	43½
5.416	40	44	56	72	40
5.417	40	48	64	72	43
5.418	64	40	32	86	24½
5.419	64	48	24	56	18½
5.420	72	48	24	64	15½
5.421	44	56	64	86	22
5.422	56	72	64	86	20½
5.423	72	56	32	64	32½
5.424	32	44	56	72	16½
5.425	48	64	44	56	23
5.426	64	44	24	56	29½
5.427	48	64	56	72	21½
5.428	44	56	64	72	39
5.429	40	44	56	86	23½
5.430	86	64	32	56	45
5.431	44	48	56	86	24½
5.432	44	48	56	86	24½
5.433	72	48	24	64	15
5.434	86	48	24	72	24½
5.435	64	48	32	72	23½
5.436	56	44	28	64	12½
5.437	56	40	48	100	36
5.438	32	44	56	72	16
5.439	64	40	32	86	24
5.440	44	56	64	86	21½
5.441	72	48	28	64	34
5.442	48	44	56	86	40
5.443	56	44	48	100	27
5.444	48	64	44	56	22½
5.445	48	64	44	56	22½
5.446	48	64	56	72	21
5.447	86	44	24	64	42
5.448	44	48	64	86	37
5.449	40	44	56	86	23
5.450	64	48	24	56	17½
5.451	32	44	56	72	15½
5.452	72	56	32	64	32
5.453	44	48	56	86	24
5.454	72	40	24	56	45
5.455	64	48	32	72	23
5.456	86	48	24	72	24
5.457	56	40	28	64	27
5.458	72	48	24	64	14
5.459	44	56	64	86	21
5.460	64	40	32	86	23½
5.461	86	56	24	64	18½
5.462	86	56	24	64	18½
5.463	48	64	56	72	20½
5.464	48	64	44	56	22
5.465	44	56	64	72	38½
5.466	56	44	28	64	11
5.467	56	44	48	100	26½
5.468	64	40	28	72	28½
5.469	40	44	56	86	22½
5.470	72	48	24	64	13½
5.471	56	32	28	72	36½
5.472	56	72	64	86	19
5.473	56	72	64	86	19
5.474	44	48	56	86	23½
5.475	64	48	32	72	22½
5.476	40	48	64	86	28
5.477	86	48	24	72	23½
5.478	56	40	32	64	38½
5.479	64	48	24	56	16½
5.480	48	56	64	72	44
5.481	64	40	32	86	23
5.482	48	44	56	86	39½
5.483	48	64	44	56	21½
5.484	72	44	28	64	40
5.485	72	48	32	64	43
5.486	86	56	32	72	36½
5.487	44	40	56	86	40
5.488	72	44	24	56	38½
5.489	40	44	56	86	22
5.490	86	44	24	64	41½
5.491	86	48	28	72	38
5.492	86	56	24	64	17½
5.493	86	56	24	64	17½
5.494	44	48	56	86	23
5.495	44	48	56	86	23
5.496	48	56	64	86	30½
5.497	86	48	24	72	23
5.498	48	64	56	72	19½
5.499	48	64	56	72	19½
5.500	64	32	28	72	45
5.501	64	40	32	86	22½
5.502	48	64	44	56	21
5.503	56	64	40	48	41
5.504	86	64	40	72	42½
5.505	56	72	64	86	18
5.506	64	48	24	56	15½
5.507	86	56	24	64	17
5.508	40	44	56	86	21½
5.509	40	44	56	86	21½
5.510	72	56	32	64	31
5.511	56	44	32	64	30
5.512	44	56	64	86	19½
5.513	56	40	44	100	26½
5.514	64	48	32	72	21½
5.515	44	48	56	86	22½
5.516	56	40	32	64	38
5.517	86	48	24	72	22½
5.518	86	48	24	72	22½
5.519	64	48	24	56	15
5.520	64	40	32	86	22
5.521	64	40	32	86	22
5.522	86	56	24	64	16½
5.523	32	44	56	72	12½
5.524	72	44	28	64	39½
5.525	86	44	24	72	32
5.526	64	40	32	72	39
5.527	40	44	56	86	21
5.528	44	56	64	86	19
5.529	72	48	32	64	42½
5.530	72	48	32	64	42½
5.531	72	48	24	64	10½
5.532	64	48	32	72	21
5.533	32	44	56	72	12
5.534	44	48	56	86	22
5.535	56	72	64	86	17
5.536	86	56	24	64	16
5.537	86	48	24	72	22
5.538	48	64	44	56	20
5.539	72	48	24	64	10
5.540	64	40	32	86	21½
5.541	44	48	56	72	39
5.542	44	40	48	86	25½
5.543	32	44	56	72	11½
5.544	64	48	24	56	14
5.545	40	44	56	86	20½
5.546	40	44	56	86	20½
5.547	48	64	56	72	18
5.548	48	64	56	72	18
5.549	72	40	24	56	44

LEAD.	GEAR ON WORM.	1ST. INTERMEDIATE.	2ND. INTERMEDIATE.	GEAR ON SCREW.	ANGLE.
5.550	56	72	64	86	16½
5.551	64	48	32	72	20½
5.552	48	56	64	86	29½
5.553	32	44	56	72	11
5.554	44	48	56	86	21½
5.555	48	64	44	56	19½
5.556	86	48	24	72	21½
5.557	86	48	24	72	21½
5.558	64	40	32	86	21
5.559	64	40	32	86	21
5.560	48	44	56	86	38½
5.561	44	56	64	86	18
5.562	32	44	56	72	10½
5.563	40	44	56	86	20
5.564	56	72	64	86	16
5.565	64	40	32	72	38½
5.566	56	44	32	64	29
5.567	64	48	24	56	13
5.568	64	48	24	56	13
5.569	64	48	32	72	20
5.570	86	40	24	72	39
5.571	32	44	56	72	10
5.572	44	48	56	86	21
5.573	44	48	56	86	21
5.574	72	48	32	64	42
5.575	86	48	24	72	21
5.576	44	56	64	86	17½
5.577	64	40	32	86	20½
5.578	48	64	56	72	17
5.579	64	48	24	56	12½
5.580	40	44	56	86	19½
5.581	40	44	56	86	19½
5.582	86	48	32	72	45½
5.583	72	44	24	64	24½
5.584	72	44	24	64	24½
5.585	86	44	24	72	31
5.586	64	48	32	72	19½
5.587	44	40	48	86	24½
5.588	86	56	24	64	14
5.589	48	64	44	56	18½
5.590	40	48	64	72	41
5.591	44	48	56	86	20½
5.592	44	56	64	86	17
5.593	48	64	56	72	16½
5.594	86	48	24	72	20½
5.595	56	40	28	64	24
5.596	56	40	28	64	24
5.597	40	44	56	86	19
5.598	48	44	56	86	38
5.599	64	48	24	56	11½
5.600	86	56	24	64	13½
5.601	72	44	24	56	37
5.602	56	44	48	100	23½
5.603	64	48	32	72	19
5.604	56	72	64	86	14½
5.605	48	64	44	56	18
5.606	44	56	64	86	16½
5.607	48	64	56	72	16
5.608	40	44	64	86	34
5.609	44	48	56	86	20
5.610	40	44	56	72	37½
5.611	86	56	24	64	13
5.612	86	48	24	72	20
5.613	64	40	32	86	19½
5.614	40	44	56	86	18½
5.615	86	44	24	64	40
5.616	56	72	64	86	14
5.617	72	48	32	64	41½
5.618	64	48	24	56	10½
5.619	44	48	56	72	38
5.620	64	48	32	72	18½
5.621	48	64	56	72	15½
5.622	86	56	24	64	12½
5.623	86	56	24	64	12½
5.624	86	56	32	72	34½
5.625	86	56	32	72	34½
5.626	72	48	28	64	31
5.627	44	48	56	86	19½
5.628	56	72	64	86	13½
5.629	86	48	24	72	19½
5.630	86	48	24	72	19½
5.631	44	40	48	86	23½
5.632	40	48	64	72	40½
5.633	86	56	24	64	12
5.634	44	56	64	86	15½
5.635	48	64	44	56	17
5.636	64	48	32	72	18
5.637	72	44	24	56	36½
5.638	56	40	28	64	23
5.639	40	44	48	72	21½
5.640	56	72	64	86	13
5.641	72	44	28	64	38
5.642	64	40	32	72	37½
5.643	86	56	24	64	11½
5.644	44	48	56	86	19
5.645	44	40	56	86	38
5.646	64	40	32	86	18½
5.647	86	48	24	72	19
5.648	44	56	64	86	15
5.649	56	40	44	100	23½
5.650	48	64	44	56	16½
5.651	56	72	64	86	12½
5.652	64	48	32	72	17½
5.653	86	56	24	64	11
5.654	64	44	32	72	29
5.655	64	44	32	72	29
5.656	86	44	24	64	39½
5.657	44	48	56	72	37½
5.658	44	40	48	72	39½
5.659	56	40	28	64	22½
5.660	48	64	56	72	14
5.661	44	48	56	86	18½
5.662	56	72	64	86	12
5.663	86	48	24	72	18½
5.664	86	48	24	72	18½
5.665	48	64	44	56	16
5.666	40	48	64	86	24
5.667	56	64	40	48	39
5.668	40	48	56	72	29
5.669	72	44	24	64	22½
5.670	56	40	44	100	23
5.671	86	56	24	64	10
5.672	48	64	56	72	13½
5.673	44	56	64	86	14
5.674	40	48	64	72	40
5.675	56	32	28	72	33½
5.676	40	44	56	86	16½
5.677	44	48	56	86	18
5.678	64	40	32	86	17½
5.679	48	64	44	56	15½
5.680	86	48	24	72	18
5.681	64	44	32	72	28½
5.682	64	48	32	72	16½
5.683	48	64	56	72	13
5.684	48	64	56	72	13
5.685	44	56	64	86	13½
5.686	86	40	24	72	37½
5.687	72	40	24	56	42½
5.688	40	48	64	86	23½
5.689	44	48	64	86	33½
5.690	48	44	64	86	45½
5.691	40	44	56	86	16
5.692	48	64	44	56	15
5.693	44	48	56	86	17½
5.694	64	40	32	86	17
5.695	48	64	56	72	12½
5.696	86	48	24	72	17½
5.697	44	56	64	86	13
5.698	86	44	24	72	29
5.699	44	40	48	72	39

LEAD.	GEAR ON WORM.	1ST. INTERMEDIATE.	2ND. INTERMEDIATE.	GEAR ON SCREW.	ANGLE.	LEAD.	GEAR ON WORM.	1ST. INTERMEDIATE.	2ND. INTERMEDIATE.	GEAR ON SCREW.	ANGLE.	LEAD.	GEAR ON WORM.	1ST. INTERMEDIATE.	2ND. INTERMEDIATE.	GEAR ON SCREW.	ANGLE.
5.700	56	72	64	86	10	5.750	64	48	32	72	14	5.800	64	44	24	56	21½
5.701	86	40	24	64	45	5.751	64	40	32	86	15	5.801	64	40	32	86	13
5.702	72	56	32	64	27½	5.752	44	48	56	86	15½	5.802	72	44	24	64	19
5.703	72	48	32	64	40½	5.753	48	64	44	56	12½	5.803	48	64	44	56	10
5.704	40	44	56	86	15½	5.754	44	48	64	86	32½	5.804	44	48	56	86	13½
5.705	40	44	56	86	15½	5.755	86	48	24	72	15½	5.805	44	48	56	72	35½
5.706	48	64	56	72	12	5.756	40	44	56	86	13½	5.806	44	40	48	86	19
5.707	56	64	40	48	38½	5.757	40	44	56	72	35½	5.807	86	48	24	72	13½
5.708	44	48	56	86	17	5.758	44	56	64	86	10	5.808	64	44	28	56	37
5.709	64	40	32	86	16½	5.759	56	44	48	100	19½	5.809	64	44	28	56	37
5.710	64	48	32	72	15½	5.760	86	64	40	72	39½	5.810	86	48	28	72	33½
5.711	86	48	24	72	17	5.761	86	40	24	72	36½	5.811	40	44	56	86	11
5.712	56	40	44	100	22	5.762	64	48	32	72	13½	5.812	44	48	64	72	44½
5.713	40	44	48	72	19½	5.763	40	44	64	72	44½	5.813	64	40	32	86	12½
5.714	40	44	64	72	45	5.764	64	40	32	86	14½	5.814	72	44	24	56	34
5.715	40	48	64	72	39½	5.765	44	48	56	86	15	5.815	86	44	24	64	37½
5.716	48	64	56	72	11½	5.766	44	48	56	86	15	5.816	44	48	56	86	13
5.717	72	44	28	64	37	5.767	72	48	28	64	28½	5.817	64	48	32	72	11
5.718	40	44	56	86	15	5.768	86	48	24	72	15	5.818	44	40	48	72	37½
5.719	44	56	64	86	12	5.769	56	40	32	64	34½	5.819	86	48	24	72	13
5.720	40	44	56	72	36	5.770	64	44	28	56	37½	5.820	64	44	24	56	21
5.721	44	40	56	86	37	5.771	40	48	64	86	21½	5.821	40	44	56	86	10½
5.722	56	44	48	100	20½	5.772	56	32	28	72	32	5.822	72	48	28	64	27½
5.723	44	48	56	86	16½	5.773	64	56	28	48	30	5.823	44	40	48	86	18½
5.724	64	48	32	72	15	5.774	64	48	32	72	13	5.824	64	40	32	86	12
5.725	86	44	24	72	28½	5.775	48	64	44	56	11½	5.825	64	40	32	72	35
5.726	86	48	24	72	16½	5.776	86	44	24	64	38	5.826	40	44	48	72	16
5.727	64	40	28	72	23	5.777	64	40	32	86	14	5.827	44	48	56	86	12½
5.728	72	44	24	64	21	5.778	86	44	24	64	38	5.828	72	48	32	64	39
5.729	72	44	24	64	21	5.779	44	48	56	86	14½	5.829	72	48	32	64	39
5.730	48	64	44	56	13½	5.780	40	44	56	86	12½	5.830	86	48	24	72	12½
5.731	40	44	56	86	14½	5.781	48	56	64	86	25	5.831	86	48	24	72	12½
5.732	44	48	56	72	36½	5.782	86	48	24	72	14½	5.832	44	40	56	86	35½
5.733	48	56	64	86	26	5.783	48	44	56	86	35½	5.833	48	64	44	40	45
5.734	56	40	32	64	35	5.784	48	44	56	86	35½	5.834	64	40	32	86	11½
5.735	48	64	56	72	10½	5.785	64	48	32	72	12½	5.835	64	40	32	86	11½
5.736	86	44	24	64	38½	5.786	64	48	32	72	12½	5.836	64	48	32	72	10
5.737	64	40	32	86	15½	5.787	72	48	32	64	39½	5.837	40	48	64	72	38
5.738	44	48	56	86	16	5.788	86	56	32	72	32	5.838	44	48	56	86	12
5.739	44	40	48	72	38½	5.789	64	40	32	86	13½	5.839	44	48	56	86	12
5.740	44	56	64	86	11	5.790	64	40	32	86	13½	5.840	44	48	56	72	35
5.741	86	48	24	72	16	5.791	40	44	56	86	12	5.841	86	48	24	72	12
5.742	48	64	44	56	13	5.792	44	48	56	86	14	5.842	86	48	24	72	12
5.743	86	48	28	72	34½	5.793	56	44	48	100	18½	5.843	86	48	28	72	33
5.744	40	44	56	86	14	5.794	48	64	44	56	10½	5.844	86	48	28	72	33
5.745	72	48	32	64	40	5.795	86	48	24	72	14	5.845	64	40	32	86	11
5.746	56	64	40	48	38	5.796	64	48	32	72	12	5.846	64	44	28	56	36½
5.747	48	44	56	86	36	5.797	40	48	64	72	38½	5.847	64	44	28	56	36½
5.748	40	44	48	72	18½	5.798	86	40	24	72	36	5.848	72	44	24	56	33½
5.749	44	56	64	86	10½	5.799	40	44	64	86	31	5.849	44	48	56	86	11½

LEAD.	GEAR ON WORM.	1ST. INTERMEDIATE.	2ND. INTERMEDIATE.	GEAR ON SCREW.	ANGLE.
5.850	86	56	32	72	31
5.851	64	40	28	56	43
5.852	86	48	24	72	11½
5.853	48	40	56	86	41½
5.854	64	40	32	86	10½
5.855	48	44	56	86	34½
5.856	44	40	48	72	37
5.857	44	56	64	72	33
5.858	56	44	48	100	16½
5.859	44	48	56	86	11
5.860	64	40	32	72	34½
5.861	44	48	64	72	44
5.862	86	48	24	72	11
5.863	64	40	32	86	10
5.864	64	40	32	86	10
5.865	64	40	28	72	19½
5.866	40	56	64	72	22½
5.867	44	40	56	86	35
5.868	44	40	56	86	35
5.869	44	48	56	86	10½
5.870	72	48	32	64	38½
5.871	86	40	24	72	35
5.872	86	48	24	72	10½
5.873	56	40	28	64	16½
5.874	40	48	56	72	25
5.875	56	40	44	100	17½
5.876	40	48	64	72	37½
5.877	86	48	28	72	32½
5.878	44	48	56	86	10
5.879	48	56	64	72	39½
5.880	86	56	32	72	30½
5.881	86	48	24	72	10
5.882	86	64	40	72	38
5.883	86	64	40	72	38
5.884	64	44	28	56	36
5.885	72	44	28	56	44
5.886	64	56	28	48	28
5.887	56	44	48	100	15½
5.888	56	40	28	64	16
5.889	48	44	56	86	34
5.890	44	56	64	72	32½
5.891	56	40	44	100	17
5.892	86	44	24	64	36½
5.893	40	44	48	72	13½
5.894	56	32	28	72	30
5.895	44	40	48	72	36½
5.896	40	44	56	72	33½
5.897	40	44	56	72	33½
5.898	72	40	28	64	41½
5.899	56	64	40	48	36
5.900	56	64	40	48	36
5.901	56	44	48	100	15
5.902	56	40	28	64	15½
5.903	44	40	56	86	34½
5.904	56	40	32	64	32½
5.905	40	44	48	72	13
5.906	86	40	24	72	34½
5.907	86	40	24	72	34½
5.908	44	48	64	86	30
5.909	86	48	28	72	32
5.910	72	48	32	64	38
5.911	44	48	56	72	34
5.912	64	44	24	56	18½
5.913	72	44	24	64	15½
5.914	56	44	48	100	14½
5.915	40	48	64	72	37
5.916	40	48	64	72	37
5.917	40	44	48	72	12½
5.918	64	40	28	72	18
5.919	86	40	28	64	51
5.920	40	48	56	72	24
5.921	64	44	28	56	35½
5.922	86	64	40	72	37½
5.923	86	64	40	72	37½
5.924	48	44	56	86	33½
5.925	86	64	32	56	39½
5.926	86	64	32	56	39½
5.927	56	44	48	100	14
5.928	40	44	48	72	12
5.929	40	44	48	72	12
5.930	86	44	24	64	36
5.931	44	40	48	86	15
5.932	72	40	24	64	28½
5.933	44	40	48	72	36
5.934	64	40	28	72	17½
5.935	72	44	28	64	34
5.936	56	40	32	64	32
5.937	56	64	40	48	35½
5.938	44	40	56	86	34
5.939	40	44	48	72	11½
5.940	86	56	32	72	29½
5.941	86	48	28	72	31½
5.942	86	40	24	72	34
5.943	56	40	28	64	14
5.944	44	40	48	86	14½
5.945	44	40	48	86	14½
5.946	44	48	56	72	33½
5.947	72	44	24	56	32
5.948	72	48	28	64	25
5.949	86	44	28	72	36½
5.950	72	48	32	64	37½
5.951	64	44	32	72	23
5.952	56	44	48	100	13
5.953	56	32	28	72	29
5.954	40	48	64	72	36½
5.955	44	56	64	72	31½
5.956	56	40	28	64	13½
5.957	64	44	28	56	35
5.958	64	44	28	56	35
5.959	40	44	48	72	10½
5.960	40	44	48	72	10½
5.961	56	44	32	64	20½
5.962	86	64	40	72	37
5.963	48	56	64	72	38½
5.964	64	40	32	72	33
5.965	40	48	56	72	23
5.966	72	44	24	64	13½
5.967	86	44	24	64	35½
5.968	86	44	24	64	35½
5.969	56	40	32	64	31½
5.970	44	40	48	72	35½
5.971	44	40	48	86	13½
5.972	72	48	28	64	24½
5.973	56	64	40	48	35
5.974	86	44	24	72	23½
5.975	56	44	48	100	12
5.976	56	44	48	100	12
5.977	86	40	24	72	33½
5.978	64	44	24	56	16½
5.979	72	44	24	56	31½
5.980	44	48	56	72	33
5.981	56	32	28	72	28½
5.982	44	40	48	86	13
5.983	44	40	48	86	13
5.984	72	44	28	56	43
5.985	40	56	64	72	19½
5.986	44	56	64	72	31
5.987	44	56	64	72	31
5.988	56	40	48	100	27
5.989	86	44	28	72	38
5.990	72	48	32	64	37
5.991	48	44	56	86	32½
5.992	40	48	64	72	36
5.993	40	48	64	72	36
5.994	64	44	28	56	34½
5.995	44	48	64	86	28½
5.996	40	44	56	72	32
5.997	64	40	32	72	32½
5.998	86	56	32	72	28½
5.999	56	44	32	64	19½

Instructions for Using Cam-Milling Attachment

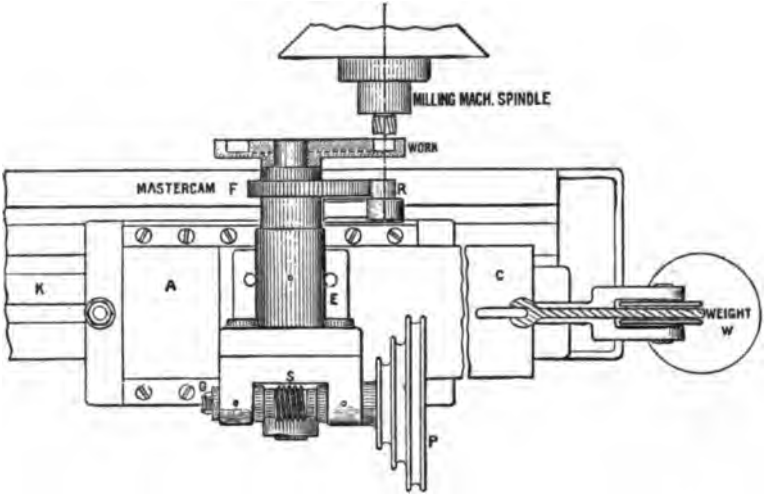

Fig. 268

For milling face cams the attachment is set as shown in illustration. For cylindrical cams it is set at right angles to this position.

The attachment consists of a head stock E, mounted on the slide C, having its ways in the bed plate A, which is bolted to the table of the machine. The work spindle is driven through worms and wormwheel G by a belt from a separate countershaft running on pulley P. There is also provision for applying a crank for hand feeding.

Power feed is recommended because it gives a more even motion than can be obtained by hand. The work spindle is left large so it can be turned down to suit the master cam and the blanks of the cams being milled.

The attachment is set up as follows:

Secure the master cam to the work spindle so as to engage the roller R, which is located on a bracket fixed to the base plate. The slide C is held in working engagement with this roller by the weight W. The weight regularly furnished is heavy enough for only the lightest work; when heavy milling is to be done, sufficient weight must be added.

The table of the machine must be adjusted vertically to bring the center of the roller on the same horizontal plane with the center of the cutter.

The cam being milled is mounted on the work spindle as shown. As the spindle revolves, it follows that a revolving motion is imparted to the cam being milled, and in combination with this revolving motion there is also a lateral movement caused by the master cam rolling against the roller R, which is fixed to the base A. If the master cam is properly constructed the resulting cam will be satisfactory.

When cams are cut out of solid stock, a roughing cut should be taken first, leaving a small amount for finishing.

THE FINISHING CUTTER MUST ALWAYS BE THE SAME DIAMETER AS THE ROLLER WITH WHICH THE FINISHED CAM SHALL WORK.

The Master Cam. In case it is found preferable to use for the master cam a cam which is exactly like and the same size as the cam to be made, the roller R must be the same diameter as the finishing cutter.

In general, the master cam should be larger than the cam being milled, and the roller R should be as large in diameter as possible.

In laying out such a master cam, decide upon a size for the roller R (which may be any convenient size), and then LAY OUT THE MASTER CAM, CONSIDERING IT AS A CAM WHICH, WHEN OPERATING IN CONNECTION WITH THIS ROLLER, WILL HAVE THE SAME THROW AND THE SAME TIME AS the cam being made.

These instructions hold for both face and cylindrical cams.

CHAPTER XXI

NATURAL TRIGONOMETRIC FUNCTIONS

Giving the Values of Sines, Cosines, Tangents, Cotangents, Secants and Cosecants for all Degrees and Minutes from 0 Degrees to 90 Degrees

These functions are arranged in 45 tables, each of which contains the values of these six functions for one angle and its complement. This, we believe, makes very much simpler and more useful tables than those arrangements which place in separate tables, Sines and Cosines, Tangents and Cotangents, Secants and Cosecants.

For Angles Less than 45°. For all angles up to 45°, the readings are made direct from the table. The angle is given at the top left-hand corner of the table and the minutes are under the left-hand column headed M. Suppose we want to know the value of the Sine of an angle of 36°12′. We turn to the table which has the angle 36° at its top as on page 398, and then we follow down the column headed Sine to the figure opposite 12 (in the left-hand column under M), and we find the value .59060. This is the Sine of 36°12′. The Cosine, Tangent, Cotangent, Secant and Cosecant are found in exactly the same way. In fact, if these several functions are wanted at the same time they may be read from the table when we are reading the Sine of the angle.

For Angles Greater than 45°. We now reverse the above process. The names of the functions are given at the BOTTOM of the table. The angle is at the BOTTOM RIGHT-HAND corner and minutes are given in the right-hand column OVER M. We must always READ UP. Suppose we want to know the value of the Sine of an angle of 54°21′. Turning to that table which has the angle 54° at the bottom, as on page 397, we find our function OVER the Sine as given at the BOTTOM of the table. We read up in the column over M at the RIGHT-HAND side of the page until we come to 21, then read across to the left and in the column OVER Sine we find the value .81259. This is the Sine of 54°21′. The value of the Cosine, Tangent, Cotangent, Secant and Cosecant are found in exactly the same way.

TABLES OF NATURAL TRIGONOMETRIC FUNCTIONS

1°

M	Sine	Cosine	Tan.	Cotan.	Secant	Cosec.	M
0	0.00000	1.0000	0.00000	Infinite	1.0000	Infinite	60
1	.00029	.0000	.00029	3437.7	.0000	3437.7	59
2	.00058	.0000	.00058	1718.9	.0000	1718.9	58
3	.00087	.0000	.00087	1145.9	.0000	1145.9	57
4	.00116	.0000	.00116	859.44	.0000	859.44	56
5	0.00145	1.0000	0.00145	687.55	1.0000	687.55	55
6	.00174	.0000	.00174	572.96	.0000	572.96	54
7	.00204	.0000	.00204	491.11	.0000	491.11	53
8	.00233	.0000	.00233	429.72	.0000	429.72	52
9	.00262	.0000	.00262	381.97	.0000	381.97	51
10	0.00291	0.99999	0.00291	343.77	1.0000	343.77	50
11	.00320	.99999	.00320	312.52	.0000	312.52	49
12	.00349	.99999	.00349	286.48	.0000	286.48	48
13	.00378	.99999	.00378	264.44	.0000	264.44	47
14	.00407	.99999	.00407	245.55	.0000	245.55	46
15	0.00436	0.99999	0.00436	229.18	1.0000	229.18	45
16	.00465	.99999	.00465	214.86	.0000	214.86	44
17	.00494	.99999	.00494	202.22	.0000	202.22	43
18	.00524	.99999	.00524	190.98	.0000	190.99	42
19	.00553	.99998	.00553	180.93	.0000	180.93	41
20	0.00582	0.99998	0.00582	171.88	1.0000	171.89	40
21	.00611	.99998	.00611	163.70	.0000	163.70	39
22	.00640	.99998	.00640	156.26	.0000	156.26	38
23	.00669	.99998	.00669	149.46	.0000	149.47	37
24	.00698	.99997	.00698	143.24	.0000	143.24	36
25	0.00727	0.99997	0.00727	137.51	1.0000	137.51	35
26	.00756	.99997	.00756	132.22	.0000	132.22	34
27	.00785	.99997	.00785	127.32	.0000	127.32	33
28	.00814	.99997	.00814	122.77	.0000	122.78	32
29	.00843	.99996	.00844	118.54	.0000	118.54	31
30	0.00873	0.99996	0.00873	114.59	1.0000	114.59	30
31	.00902	.99996	.00902	110.89	.0000	110.90	29
32	.00931	.99996	.00931	107.43	.0000	107.43	28
33	.00960	.99995	.00960	104.17	.0000	104.18	27
34	.00989	.99995	.00989	101.11	.0000	101.11	26
35	0.01018	0.99995	0.01018	98.218	1.0000	98.223	25
36	.01047	.99994	.01047	95.489	.0001	95.495	24
37	.01076	.99994	.01076	92.908	.0000	92.914	23
38	.01105	.99994	.01105	90.463	.0001	90.469	22
39	.01134	.99993	.01134	88.143	.0001	88.149	21
40	0.01163	0.99993	0.01164	85.940	1.0001	85.946	20
41	.01193	.99993	.01193	83.843	.0001	83.849	19
42	.01222	.99992	.01222	81.847	.0001	81.853	18
43	.01251	.99992	.01251	79.943	.0001	79.950	17
44	.01280	.99992	.01280	78.126	.0001	78.133	16
45	0.01309	0.99991	0.01309	76.390	1.0001	76.396	15
46	.01338	.99991	.01338	74.729	.0001	74.736	14
47	.01367	.99991	.01367	73.139	.0001	73.146	13
48	.01396	.99990	.01396	71.615	.0001	71.622	12
49	.01425	.99990	.01425	70.153	.0001	70.160	11
50	0.01454	0.99989	0.01454	68.750	1.0001	68.757	10
51	.01483	.99989	.01484	67.402	.0001	67.409	9
52	.01512	.99988	.01513	66.105	.0001	66.113	8
53	.01542	.99988	.01542	64.858	.0001	64.865	7
54	.01571	.99988	.01571	63.657	.0001	63.664	6
55	0.01600	0.99987	0.01600	62.499	1.0001	62.507	5
56	.01629	.99987	.01629	61.383	.0001	61.391	4
57	.01658	.99987	.01658	60.306	.0001	60.314	3
58	.01687	.99986	.01687	59.266	.0001	59.274	2
59	.01716	.99985	.01716	58.261	.0001	58.270	1
60	0.01745	0.99985	0.01745	57.290	1.0001	57.299	0
M	Cosine	Sine	Cotan.	Tan.	Cosec.	Secant	M

89°

2°

M	Sine	Cosine	Tan.	Cotan.	Secant	Cosec.	M
0	0.01745	0.99985	0.01745	57.290	1.0001	57.299	60
1	.01774	.99934	.01775	56.350	.0001	56.359	59
2	.01803	.99984	.01804	55.441	.0001	55.450	58
3	.01832	.99983	.01833	54.561	.0002	54.570	57
4	.01861	.99983	.01862	53.708	.0002	53.718	56
5	0.01891	0.99982	0.01891	52.882	1.0002	52.891	55
6	.01920	.99981	.01920	52.081	.0002	52.090	54
7	.01949	.99981	.01949	51.303	.0002	51.313	53
8	.01978	.99980	.01978	50.548	.0002	50.553	52
9	.02007	.99980	.02007	49.816	.0002	49.826	51
10	0.02036	0.99979	0.02036	49.104	1.0002	49.114	50
11	.02065	.99979	.02066	48.412	.0002	48.422	49
12	.02094	.99978	.02095	47.739	.0002	47.750	48
13	.02123	.99977	.02124	47.085	.0002	47.096	47
14	.02152	.99977	.02153	46.449	.0002	46.460	46
15	0.02181	0.99976	0.02182	45.829	1.0002	45.840	45
16	.02210	.99975	.02211	45.226	.0002	45.237	44
17	.02240	.99975	.02240	44.638	.0002	44.650	43
18	.02269	.99974	.02269	44.066	.0002	44.077	42
19	.02298	.99974	.02298	43.508	.0003	43.520	41
20	0.02327	0.99973	0.02327	42.964	1.0003	42.976	40
21	.02356	.99972	.02357	42.433	.0003	42.445	39
22	.02385	.99971	.02386	41.916	.0003	41.928	38
23	.02414	.99971	.02415	41.410	.0003	41.423	37
24	.02443	.99970	.02444	40.917	.0003	40.930	36
25	0.02472	0.99969	0.02473	40.436	1.0003	40.448	35
26	.02501	.99969	.02502	39.965	.0003	39.978	34
27	.02530	.99968	.02531	39.506	.0003	39.518	33
28	.02559	.99967	.02560	39.057	.0003	39.069	32
29	.02589	.99966	.02589	38.618	.0003	35.631	31
30	0.02618	0.99966	0.02618	38.188	1.0003	35.201	30
31	.02647	.99965	.02648	37.769	.0003	37.782	29
32	.02676	.99964	.02677	37.358	.0003	37.371	28
33	.02705	.99963	.02706	36.956	.0004	36.969	27
34	.02734	.99963	.02735	36.563	.0004	36.576	26
35	0.02763	0.99962	0.02764	36.177	1.0004	36.191	25
36	.02792	.99961	.02793	35.800	.0004	35.814	24
37	.02821	.99960	.02822	35.431	.0004	35.445	23
38	.02850	.99959	.02851	35.069	.0004	35.084	22
39	.02879	.99958	.02880	34.715	.0004	34.729	21
40	0.02908	0.99958	0.02910	34.368	1.0004	34.382	20
41	.02937	.99957	.02939	34.027	.0004	34.042	19
42	.02967	.99956	.02968	33.693	.0004	33.708	18
43	.02996	.99955	.02997	33.366	.0004	33.381	17
44	.03025	.99954	.03026	33.045	.0004	33.060	16
45	0.03054	0.99953	0.03055	32.730	1.0005	32.745	15
46	.03083	.99952	.03084	32.421	.0005	32.437	14
47	.03112	.99951	.03113	32.118	.0005	32.134	13
48	.03141	.99951	.03143	31.820	.0005	31.836	12
49	.03170	.99950	.03172	31.528	.0005	31.544	11
50	0.03199	0.99949	0.03201	31.241	1.0005	31.257	10
51	.03228	.99948	.03230	30.960	.0005	30.976	9
52	.03257	.99947	.03259	30.683	.0005	30.699	8
53	.03286	.99946	.03288	30.411	.0005	30.428	7
54	.03315	.99945	.03317	30.145	.0005	30.161	6
55	0.03344	0.99944	0.03346	29.882	1.0005	29.899	5
56	.03374	.99943	.03375	29.624	.0006	29.641	4
57	.03403	.99942	.03405	29.371	.0006	29.388	3
58	.03432	.99941	.03434	29.122	.0006	29.139	2
59	.03461	.99940	.03463	28.877	.0006	29.894	1
60	0.03490	0.99939	0.03492	28.636	1.0006	28.654	0
M	Cosine	Sine	Cotan.	Tan.	Cosec.	Secnnt	M

88°

3°

M	Sine	Cosine	Tan.	Cotan.	Secant	Cosec.	M
0	0.03490	0.99939	0.03492	28.636	1.0006	28.654	60
1	.03519	.99938	.03521	28.399	.0006	28.417	59
2	.03548	.99937	.03550	28.166	.0006	28.184	58
3	.03577	.99936	.03579	27.937	.0006	27.955	57
4	.03606	.99935	.03608	27.712	.0006	27.730	56
5	0.03635	0.99934	0.03638	27.490	1.0007	27.508	55
6	.03664	.99933	.03667	27.271	.0007	27.290	54
7	.03693	.99932	.03696	27.056	.0007	27.075	53
8	.03722	.99931	.03725	26.845	.0007	26.864	52
9	.03751	.99930	.03754	26.637	.0007	26.655	51
10	0.03781	0.99928	0.03783	26.432	1.0007	26.450	50
11	.03810	.99927	.03812	26.230	.0007	26.249	49
12	.03839	.99926	.03842	26.031	.0007	26.050	48
13	.03868	.99925	.03871	25.835	.0007	25.854	47
14	.03897	.99924	.03900	25.642	.0008	25.661	46
15	0.03926	0.99923	0.03929	25.452	1.0008	25.471	45
16	.03955	.99922	.03958	25.264	.0008	25.284	44
17	.03984	.99921	.03987	25.080	.0008	25.100	43
18	.04013	.99919	.04016	24.898	.0008	24.918	42
19	.04042	.99918	.04045	24.718	.0008	24.739	41
20	0.04071	0.99917	0.04075	24.542	1.0008	24.562	40
21	.04100	.99916	.04104	24.367	.0008	24.388	39
22	.04129	.99915	.04133	24.196	.0008	24.216	38
23	.04158	.99913	.04162	24.026	.0009	24.047	37
24	.04187	.99912	.04191	23.859	.0009	23.880	36
25	0.04217	0.99911	0.04220	23.694	1.0009	23.716	35
26	.04246	.99910	.04249	23.532	.0009	23.553	34
27	.04275	.99908	.04279	23.372	.0009	23.393	33
28	.04304	.99907	.04308	23.214	.0009	23.235	32
29	.04333	.99906	.04337	23.058	.0009	23.079	31
30	0.04362	0.99905	0.04366	22.904	1.0009	22.925	30
31	.04391	.99903	.04395	22.752	.0010	22.774	29
32	.04420	.99902	.04424	22.602	.0010	22.624	28
33	.04449	.99901	.04453	22.454	.0010	22.476	27
34	.04478	.99900	.04483	22.308	.0010	22.330	26
35	0.04507	0.99898	0.04512	22.164	1.0010	22.186	25
36	.04536	.99897	.04541	22.022	.0010	22.044	24
37	.04565	.99896	.04570	21.881	.0010	21.904	23
38	.04594	.99894	.04599	21.742	.0010	21.765	22
39	.04623	.99893	.04628	21.606	.0011	21.629	21
40	0.04652	0.99892	0.04657	21.470	1.0011	21.492	20
41	.04681	.99890	.04687	21.337	.0011	21.360	19
42	.04711	.99889	.04716	21.205	.0011	21.228	18
43	.04740	.99888	.04745	21.075	.0011	21.098	17
44	.04769	.99886	.04774	20.946	.0011	20.970	16
45	0.04798	0.99885	0.04803	20.819	1.0011	20.843	15
46	.04827	.99883	.04832	20.693	.0012	20.717	14
47	.04856	.99882	.04862	20.569	.0012	20.593	13
48	.04885	.99881	.04891	20.446	.0012	20.471	12
49	.04914	.99879	.04920	20.325	.0012	20.350	11
50	0.04943	0.99878	0.04949	20.205	1.0012	20.230	10
51	.04972	.99876	.04978	20.087	.0012	20.112	9
52	.05001	.99875	.05007	19.970	.0012	19.995	8
53	.05030	.99873	.05037	19.854	.0013	19.880	7
54	.05059	.99872	.05066	19.740	.0013	19.766	6
55	0.05088	0.99870	0.05095	19.627	1.0013	19.653	5
56	.05117	.99869	.05124	19.515	.0013	19.541	4
57	.05146	.99867	.05153	19.405	.0013	19.431	3
58	.05175	.99866	.05182	19.296	.0013	19.322	2
59	.05204	.99864	.05212	19.188	.0013	19.214	1
60	0.05234	0.99863	0.05241	19.081	1.0014	19.107	0
M	Cosine	Sine	Cotan.	Tan.	Cosec.	Secant	M

87°

3°

M	Sine	Cosine	Tan.	Cotan.	Secant	Cosec.	M
0	0.05234	0.99863	0.05241	19.081	1.0014	19.107	60
1	.05263	.99861	.05270	18.975	.0014	19.002	59
2	.05292	.99860	.05299	18.871	.0014	18.897	58
3	.05321	.99858	.05328	18.768	.0014	18.794	57
4	.05350	.99857	.05357	18.665	.0014	18.692	56
5	0.05379	0.99855	0.05387	18.561	1.0014	18.591	55
6	.05408	.99854	.05416	18.464	.0015	18.491	54
7	.05437	.99852	.05445	18.365	.0015	18.393	53
8	.05466	.99850	.05474	18.268	.0015	18.295	52
9	.05495	.99849	.05503	18.171	.0015	18.198	51
10	0.05524	0.99847	0.05532	18.075	1.0015	18.103	50
11	.05553	.99846	.05562	17.980	.0015	18.008	49
12	.05582	.99844	.05591	17.886	.0016	17.914	48
13	.05611	.99842	.05620	17.793	.0016	17.821	47
14	.05640	.99841	.05649	17.701	.0016	17.730	46
15	0.05669	0.99839	0.05678	17.610	1.0016	17.639	45
16	.05698	.99837	.05707	17.520	.0016	17.549	44
17	.05727	.99836	.05737	17.431	.0016	17.460	43
18	.05756	.99834	.05766	17.343	.0017	17.372	42
19	.05785	.99832	.05795	17.256	.0017	17.285	41
20	0.05814	0.99831	0.05824	17.169	1.0017	17.198	40
21	.05843	.99829	.05853	17.084	.0017	17.113	39
22	.05872	.99827	.05883	16.999	.0017	17.028	38
23	.05902	.99826	.05912	16.915	.0017	16.944	37
24	.05931	.99824	.05941	16.832	.0018	16.861	36
25	0.05960	0.99822	0.05970	16.750	1.0018	16.779	35
26	.05989	.99820	.05999	16.668	.0018	16.698	34
27	.06018	.99819	.06029	16.587	.0018	16.617	33
28	.06047	.99817	.06058	16.507	.0018	16.538	32
29	.06076	.99815	.06087	16.428	.0018	16.459	31
30	0.06105	0.99813	0.06116	16.350	1.0019	16.380	30
31	.06134	.99812	.06145	16.272	.0019	16.303	29
32	.06163	.99810	.06175	16.195	.0019	16.226	28
33	.06192	.99808	.06204	16.119	.0019	16.150	27
34	.06221	.99806	.06233	16.043	.0019	16.075	26
35	0.06250	0.99804	0.06262	15.969	1.0019	16.000	25
36	.06279	.99803	.06291	15.894	.0020	15.926	24
37	.06308	.99801	.06321	15.821	.0020	15.853	23
38	.06337	.99799	.06350	15.748	.0020	15.780	22
39	.06366	.99797	.06379	15.676	.0020	15.708	21
40	0.06395	0.99795	0.06408	15.605	1.0020	15.637	20
41	.06424	.99793	.06437	15.534	.0021	15.566	19
42	.06453	.99791	.06467	15.464	.0021	15.496	18
43	.06482	.99790	.06496	15.394	.0021	15.427	17
44	.06511	.99788	.06525	15.325	.0021	15.358	16
45	0.06540	0.99786	0.06554	15.257	1.0021	15.290	15
46	.06569	.99784	.06583	15.189	.0022	15.222	14
47	.06598	.99782	.06613	15.122	.0022	15.155	13
48	.06627	.99780	.06642	15.056	.0022	15.089	12
49	.06656	.99778	.06671	14.990	.0022	15.023	11
50	0.06685	0.99776	0.06700	14.924	1.0022	14.958	10
51	.06714	.99774	.06730	14.860	.0023	14.893	9
52	.06743	.99772	.06759	14.795	.0023	14.829	8
53	.06772	.99770	.06788	14.732	.0023	14.765	7
54	.06801	.99768	.06817	14.668	.0023	14.702	6
55	0.06830	0.99766	0.06846	14.606	1.0023	14.640	5
56	.06859	.99764	.06876	14.544	.0024	14.578	4
57	.06888	.99762	.06905	14.482	.0024	14.517	3
58	.06918	.99760	.06934	14.421	.0024	14.456	2
59	.06947	.99758	.06963	14.361	.0024	14.395	1
60	0.06976	0.99756	0.06993	14.301	1.0024	14.335	0
M	Cosine	Sine	Cotan.	Tan.	Cosec.	Secant	M

86°

4°

M	Sine	Cosine	Tan.	Cotan.	Secant	Cosec.	M
0	0.06976	0.99756	0.06993	14.301	1.0024	14.335	60
1	.07005	.99754	.07022	14.241	.0025	14.276	59
2	.07034	.99752	.07051	14.182	.0025	14.217	58
3	.07063	.99750	.07080	14.123	.0025	14.159	57
4	.07092	.99748	.07110	14.065	.0025	14.101	56
5	0.07121	0.99746	0.07139	14.008	1.0025	14.043	55
6	.07150	.99744	.07168	13.951	.0026	13.986	54
7	.07179	.99742	.07197	13.894	.0026	13.930	53
8	.07208	.99740	.07226	13.838	.0026	13.874	52
9	.07237	.99738	.07256	13.782	.0026	13.818	51
10	0.07266	0.99736	0.07285	13.727	1.0026	13.763	50
11	.07295	.99733	.07314	13.672	.0027	13.708	49
12	.07324	.99731	.07343	13.617	.0027	13.654	48
13	.07353	.99729	.07373	13.563	.0027	13.600	47
14	.07382	.99727	.07402	13.510	.0027	13.547	46
15	0.07411	0.99725	0.07431	13.457	1.0027	13.494	45
16	.07440	.99723	.07460	13.404	.0028	13.441	44
17	.07469	.99721	.07490	13.351	.0028	13.389	43
18	.07498	.99718	.07519	13.299	.0028	13.337	42
19	.07527	.99716	.07548	13.248	.0028	13.286	41
20	0.07556	0.99714	0.07577	13.197	1.0029	13.235	40
21	.07585	.99712	.07607	13.146	.0029	13.184	39
22	.07614	.99710	.07636	13.096	.0029	13.134	38
23	.07643	.99707	.07665	13.046	.0029	13.084	37
24	.07672	.99705	.07694	12.996	.0029	13.034	36
25	0.07701	0.99703	0.07724	12.947	1.0030	12.985	35
26	.07730	.99701	.07753	12.898	.0030	12.937	34
27	.07759	.99698	.07782	12.849	.0030	12.888	33
28	.07788	.99696	.07812	12.801	.0030	12.840	32
29	.07817	.99694	.07841	12.754	.0031	12.793	31
30	0.07846	0.99692	0.07870	12.706	1.0031	12.745	30
31	.07875	.99689	.07899	12.659	.0031	12.698	29
32	.07904	.99687	.07929	12.612	.0031	12.652	28
33	.07933	.99685	.07958	12.566	.0032	12.606	27
34	.07962	.99682	.07987	12.520	.0032	12.560	26
35	0.07991	0.99680	0.08016	12.474	1.0032	12.514	25
36	.08020	.99678	.08046	12.429	.0032	12.469	24
37	.08049	.99675	.08075	12.384	.0032	12.424	23
38	.08078	.99673	.08104	12.339	.0033	12.379	22
39	.08107	.99671	.08134	12.295	.0033	12.335	21
40	0.08136	0.99668	0.08163	12.250	1.0033	12.291	20
41	.08165	.99666	.08192	12.207	.0033	12.248	19
42	.08194	.99664	.08221	12.163	.0034	12.204	18
43	.08223	.99661	.08251	12.120	.0034	12.161	17
44	.08252	.99659	.08280	12.077	.0034	12.118	16
45	0.08281	0.99656	0.08309	12.035	1.0034	12.076	15
46	.08310	.99654	.08339	11.992	.0035	12.034	14
47	.08339	.99652	.08368	11.950	.0035	11.992	13
48	.08368	.99649	.08397	11.909	.0035	11.950	12
49	.08397	.99647	.08426	11.867	.0035	11.909	11
50	0.08426	0.99644	0.08456	11.826	1.0036	11.868	10
51	.08455	.99642	.08485	11.785	.0036	11.828	9
52	.08484	.99639	.08514	11.745	.0036	11.787	8
53	.08513	.99637	.08544	11.704	.0036	11.747	7
54	.08542	.99634	.08573	11.664	.0037	11.707	6
55	0.08571	0.99632	0.08602	11.625	1.0037	11.668	5
56	.08600	.99629	.08632	11.585	.0037	11.628	4
57	.08629	.99627	.08661	11.546	.0037	11.589	3
58	.08658	.99624	.08690	11.507	.0038	11.550	2
59	.08687	.99622	.08719	11.468	.0038	11.512	1
60	0.08715	0.99619	0.08749	11.430	1.0038	11.474	0
M	Cosine	Sine	Cotan.	Tan.	Cosec.	Secant	M

85°

5°

M	Sine	Cosine	Tan.	Cotan.	Secant	Cosec.	M
0	0.08715	0.99619	0.08749	11.430	1.0038	11.474	60
1	.08744	.99617	.08778	11.392	.0038	11.436	59
2	.08773	.99614	.08807	11.354	.0039	11.398	58
3	.08802	.99612	.08837	11.316	.0039	11.360	57
4	.08831	.99609	.08866	11.279	.0039	11.323	56
5	0.08860	0.99607	0.08895	11.242	1.0039	11.286	55
6	.08889	.99604	.08925	11.205	.0040	11.249	54
7	.08918	.99601	.08954	11.168	.0040	11.213	53
8	.08947	.99599	.08983	11.132	.0040	11.176	52
9	.08976	.99596	.09013	11.095	.0040	11.140	51
10	0.09005	0.99594	0.09042	11.059	1.0041	11.104	50
11	.09034	.99591	.09071	11.024	.0041	11.069	49
12	.09063	.99588	.09101	10.988	.0041	11.033	48
13	.09092	.99586	.09130	10.953	.0041	10.998	47
14	.09121	.99583	.09159	10.918	.0042	10.963	46
15	0.09150	0.99580	0.09189	10.883	1.0042	10.929	45
16	.09179	.99578	.09218	10.848	.0042	10.894	44
17	.09208	.99575	.09247	10.814	.0043	10.860	43
18	.09237	.99572	.09277	10.780	.0043	10.826	42
19	.09266	.99570	.09306	10.746	.0043	10.792	41
20	0.09295	0.99567	0.09335	10.712	1.0043	10.758	40
21	.09324	.99564	.09365	10.678	.0044	10.725	39
22	.09353	.99562	.09394	10.645	.0044	10.692	38
23	.09382	.99559	.09423	10.612	.0044	10.659	37
24	.09411	.99556	.09453	10.579	.0044	10.626	36
25	0.09440	0.99553	0.09482	10.546	1.0045	10.593	35
26	.09469	.99551	.09511	10.514	.0045	10.561	34
27	.09498	.99548	.09541	10.481	.0045	10.529	33
28	.09527	.99545	.09570	10.449	.0046	10.497	32
29	.09556	.99542	.09599	10.417	.0046	10.465	31
30	0.09584	0.99540	0.09629	10.385	1.0046	10.433	30
31	.09613	.99537	.09658	10.354	.0046	10.402	29
32	.09642	.99534	.09688	10.322	.0047	10.371	28
33	.09671	.99531	.09717	10.291	.0047	10.340	27
34	.09700	.99528	.09746	10.260	.0047	10.309	26
35	0.09729	0.99525	0.09776	10.229	1.0048	10.278	25
36	.09758	.99523	.09805	10.199	.0048	10.248	24
37	.09787	.99520	.09834	10.168	.0048	10.217	23
38	.09816	.99517	.09864	10.138	.0048	10.187	22
39	.09845	.99514	.09893	10.108	.0049	10.157	21
40	0.09874	0.99511	0.09922	10.078	1.0049	10.127	20
41	.09903	.99508	.09952	10.048	.0049	10.098	19
42	.09932	.99506	.09981	10.019	.0050	10.068	18
43	.09961	.99503	.10011	9.9893	.0050	10.039	17
44	.09990	.99500	.10040	9.9601	.0050	10.010	16
45	0.10019	0.99497	0.10069	9.9310	1.0050	9.9812	15
46	.10048	.99494	.10099	9.9021	.0051	9.9525	14
47	.10077	.99491	.10128	9.8731	.0051	9.9239	13
48	.10106	.99488	.10158	9.8448	.0051	9.8955	12
49	.10134	.99485	.10187	9.8164	.0052	9.8672	11
50	0.10163	0.99482	0.10216	9.7882	1.0052	9.8391	10
51	.10192	.99479	.10246	9.7601	.0052	9.8112	9
52	.10221	.99476	.10275	9.7322	.0053	9.7834	8
53	.10250	.99473	.10305	9.7044	.0053	9.7558	7
54	.10279	.99470	.10334	9.6768	.0053	9.7283	6
55	0.10308	0.99467	0.10363	9.6493	1.0053	9.7010	5
56	.10337	.99464	.10393	9.6220	.0054	9.6739	4
57	.10366	.99461	.10422	9.5949	.0054	9.6469	3
58	.10395	.99458	.10452	9.5679	.0054	9.6200	2
59	.10424	.99455	.10481	9.5411	.0055	9.5933	1
60	0.10453	0.99452	0.10510	9.5144	1.0055	9.5663	0
M	Cosine	Sine	Cotan.	Tan.	Cosec.	Secant	M

84°

TABLES OF NATURAL TRIGONOMETRIC FUNCTIONS

6°

M	Sine	Cosine	Tan.	Cotan.	Secant	Cosec.	M
0	0.10453	0.99452	0.10510	9.5144	1.0055	9.5668	60
1	.10482	.99449	.10540	.4878	.0055	.5404	59
2	.10511	.99446	.10569	.4614	.0056	.5141	58
3	.10540	.99443	.10599	.4351	.0056	.4880	57
4	.10568	.99440	.10628	.4090	.0056	.4620	56
5	0.10597	0.99437	0.10657	9.3831	1.0057	9.4362	55
6	.10626	.99434	.10687	.3572	.0057	.4105	54
7	.10655	.99431	.10716	.3315	.0057	.3850	53
8	.10684	.99428	.10746	.3060	.0057	.3596	52
9	.10713	.99424	.10775	.2806	.0058	.3343	51
10	0.10742	0.99421	0.10805	9.2553	1.0058	9.3092	50
11	.10771	.99418	.10834	.2302	.0058	.2842	49
12	.10800	.99415	.10863	.2051	.0059	.2593	48
13	.10829	.99412	.10893	.1803	.0059	.2346	47
14	.10858	.99409	.10922	.1555	.0059	.2100	46
15	0.10887	0.99406	0.10952	9.1309	1.0060	9.1855	45
16	.10916	.99402	.10981	.1064	.0060	.1612	44
17	.10944	.99399	.11011	.0821	.0060	.1370	43
18	.10973	.99396	.11040	.0579	.0061	.1129	42
19	.11002	.99393	.11069	.0338	.0061	.0890	41
20	0.11031	0.99390	0.11099	9.0098	1.0061	9.0651	40
21	.11060	.99386	.11128	8.9860	.0062	.0414	39
22	.11089	.99383	.11158	.9623	.0062	.0179	38
23	.11118	.99380	.11187	.9387	.0062	8.9944	37
24	.11147	.99377	.11217	.9152	.0063	.9711	36
25	0.11176	0.99373	0.11246	8.8918	1.0063	8.9479	35
26	.11205	.99370	.11276	.8686	.0063	.9248	34
27	.11234	.99367	.11305	.8455	.0064	.9018	33
28	.11262	.99364	.11335	.8225	.0064	.8790	32
29	.11291	.99360	.11364	.7996	.0064	.8563	31
30	0.11320	0.99357	0.11393	8.7769	1.0065	8.8337	30
31	.11349	.99354	.11423	.7542	.0065	.8112	29
32	.11378	.99350	.11452	.7317	.0065	.7888	28
33	.11407	.99347	.11482	.7093	.0066	.7665	27
34	.11436	.99344	.11511	.6870	.0066	.7444	26
35	0.11465	0.99341	0.11541	8.6648	1.0066	8.7223	25
36	.11494	.99337	.11570	.6427	.0067	.7004	24
37	.11523	.99334	.11600	.6208	.0067	.6786	23
38	.11551	.99330	.11629	.5989	.0067	.6569	22
39	.11580	.99327	.11659	.5772	.0068	.6353	21
40	0.11609	0.99324	0.11688	8.5555	1.0068	8.6138	20
41	.11638	.99320	.11718	.5340	.0068	.5924	19
42	.11667	.99317	.11747	.5126	.0069	.5711	18
43	.11696	.99314	.11777	.4913	.0069	.5499	17
44	.11725	.99310	.11806	.4701	.0069	.5289	16
45	0.11754	0.99307	0.11836	8.4489	1.0070	8.5079	15
46	.11783	.99303	.11865	.4279	.0070	.4871	14
47	.11811	.99300	.11895	.4070	.0070	.4663	13
48	.11840	.99296	.11924	.3862	.0071	.4457	12
49	.11869	.99293	.11954	.3655	.0071	.4251	11
50	0.11898	0.99290	0.11983	8.3449	1.0071	8.4046	10
51	.11927	.99286	.12013	.3244	.0072	.3843	9
52	.11956	.99283	.12042	.3040	.0072	.3640	8
53	.11985	.99279	.12072	.2837	.0073	.3439	7
54	.12014	.99276	.12101	.2635	.0073	.3238	6
55	0.12042	0.99272	0.12131	8.2434	1.0073	8.3039	5
56	.12071	.99269	.12160	.2234	.0074	.2840	4
57	.12100	.99265	.12190	.2035	.0074	.2642	3
58	.12129	.99262	.12219	.1837	.0074	.2446	2
59	.12158	.99258	.12249	.1640	.0075	.2250	1
60	0.12187	0.99255	0.12278	8.1443	1.0075	8.2055	0
M	Cosine	Sine	Cotan.	Tan.	Cosec.	Secant	M

83°

7°

M	Sine	Cosine	Tan.	Cotan.	Secant	Cosec.	M
0	0.12187	0.99255	0.12278	8.1443	1.0075	8.2055	60
1	.12216	.99251	.12308	.1248	.0075	.1861	59
2	.12245	.99247	.12337	.1053	.0076	.1668	58
3	.12273	.99244	.12367	.0860	.0076	.1476	57
4	.12302	.99240	.12396	.0667	.0076	.1285	56
5	0.12331	0.99237	0.12426	8.0476	1.0077	8.1094	55
6	.12360	.99233	.12456	.0285	.0077	.0905	54
7	.12389	.99229	.12485	.0095	.0078	.0717	53
8	.12418	.99226	.12515	7.9906	.0078	.0529	52
9	.12447	.99222	.12544	.9717	.0078	.0342	51
10	0.12476	0.99219	0.12574	7.9530	1.0079	8.0156	50
11	.12504	.99215	.12603	.9344	.0079	7.9971	49
12	.12533	.99211	.12633	.9158	.0079	.9787	48
13	.12562	.99208	.12662	.8973	.0080	.9604	47
14	.12591	.99204	.12692	.8789	.0080	.9421	46
15	0.12620	0.99200	0.12722	7.8606	1.0080	7.9240	45
16	.12649	.99197	.12751	.8424	.0081	.9059	44
17	.12678	.99193	.12781	.8243	.0081	.8879	43
18	.12706	.99189	.12810	.8062	.0082	.8700	42
19	.12735	.99186	.12840	.7882	.0082	.8522	41
20	0.12764	0.99182	0.12869	7.7703	1.0082	7.8344	40
21	.12793	.99178	.12899	.7525	.0083	.8168	39
22	.12822	.99174	.12928	.7348	.0083	.7992	38
23	.12851	.99171	.12958	.7171	.0084	.7817	37
24	.12879	.99167	.12988	.6996	.0084	.7642	36
25	0.12908	0.99163	0.13017	7.6821	1.0084	7.7469	35
26	.12937	.99160	.13047	.6646	.0085	.7296	34
27	.12966	.99156	.13076	.6473	.0085	.7124	33
28	.12995	.99152	.13106	.6300	.0085	.6953	32
29	.13024	.99148	.13136	.6129	.0086	.6783	31
30	0.13053	0.99144	0.13165	7.5957	1.0086	7.6613	30
31	.13081	.99141	.13195	.5787	.0087	.6444	29
32	.13110	.99137	.13224	.5617	.0087	.6276	28
33	.13139	.99133	.13254	.5449	.0087	.6108	27
34	.13168	.99129	.13284	.5280	.0088	.5942	26
35	0.13197	0.99125	0.13313	7.5113	1.0088	7.5776	25
36	.13226	.99121	.13343	.4946	.0089	.5611	24
37	.13254	.99118	.13372	.4780	.0089	.5446	23
38	.13283	.99114	.13402	.4615	.0089	.5282	22
39	.13312	.99110	.13432	.4451	.0090	.5119	21
40	0.13341	0.99106	0.13461	7.4287	1.0090	7.4957	20
41	.13370	.99102	.13491	.4124	.0090	.4795	19
42	.13399	.99098	.13520	.3961	.0091	.4634	18
43	.13427	.99094	.13550	.3800	.0091	.4474	17
44	.13456	.99090	.13580	.3639	.0092	.4315	16
45	0.13485	0.99086	0.13609	7.3479	1.0092	7.4156	15
46	.13514	.99083	.13639	.3319	.0092	.3998	14
47	.13543	.99079	.13669	.3160	.0093	.3840	13
48	.13571	.99075	.13698	.3002	.0093	.3683	12
49	.13600	.99071	.13728	.2844	.0094	.3527	11
50	0.13629	0.99067	0.13757	7.2687	1.0094	7.3372	10
51	.13658	.99063	.13787	.2531	.0094	.3217	9
52	.13687	.99059	.13817	.2375	.0095	.3063	8
53	.13716	.99055	.13846	.2220	.0095	.2909	7
54	.13744	.99051	.13876	.2066	.0096	.2757	6
55	0.13773	0.99047	0.13906	7.1912	1.0096	7.2604	5
56	.13802	.99043	.13935	.1759	.0097	.2453	4
57	.13831	.99039	.13965	.1607	.0097	.2302	3
58	.13860	.99035	.13995	.1455	.0097	.2152	2
59	.13888	.99031	.14024	.1304	.0098	.2002	1
60	0.13917	0.99027	0.14054	7.1154	1.0098	7.1853	0
M	Cosine	Sine	Cotan.	Tan.	Cosec.	Secant	M

82°

8°

M	Sine	Cosine	Tan.	Cotan.	Secant	Cosec.	M
0	0.13917	0.99027	0.14054	7.1154	1.0098	7.1853	60
1	.13946	.99023	.14084	.1004	.0099	.1704	59
2	.13975	.99019	.14113	.0854	.0099	.1557	58
3	.14004	.99015	.14143	.0706	.0099	.1409	57
4	.14032	.99010	.14173	.0558	.0100	.1263	56
5	0.14061	0.99006	0.14202	7.0410	1.0100	7.1117	55
6	.14090	.99002	.14232	.0264	.0101	.0972	54
7	.14119	.98998	.14262	.0117	.0101	.0827	53
8	.14148	.98994	.14291	6.9972	.0102	.0683	52
9	.14176	.98990	.14321	.9827	.0102	.0539	51
10	0.14205	0.98986	0.14351	6.9682	1.0102	7.0396	50
11	.14234	.98982	.14380	.9538	.0103	.0254	49
12	.14263	.98978	.14410	.9395	.0103	.0112	48
13	.14292	.98973	.14440	.9252	.0104	6.9971	47
14	.14320	.98969	.14470	.9110	.0104	.9830	46
15	0.14349	0.98965	0.14499	6.8969	1.0104	6.9690	45
16	.14378	.98961	.14529	.8828	.0105	.9550	44
17	.14407	.98957	.14559	.8687	.0105	.9411	43
18	.14436	.98952	.14588	.8547	.0106	.9273	42
19	.14464	.98948	.14618	.8408	.0106	.9135	41
20	0.14493	0.98944	0.14648	6.8269	1.0107	6.8998	40
21	.14522	.98940	.14677	.8131	.0107	.8861	39
22	.14551	.98936	.14707	.7993	.0107	.8725	38
23	.14579	.98931	.14737	.7856	.0108	.8589	37
24	.14608	.98927	.14767	.7720	.0108	.8454	36
25	0.14637	0.98923	0.14796	6.7584	1.0109	6.8320	35
26	.14666	.98919	.14826	.7448	.0109	.8185	34
27	.14695	.98914	.14856	.7313	.0110	.8052	33
28	.14723	.98910	.14886	.7179	.0110	.7919	32
29	.14752	.98906	.14915	.7045	.0111	.7787	31
30	0.14781	0.98901	0.14945	6.6911	1.0111	6.7655	30
31	.14810	.98897	.14975	.6779	.0111	.7523	29
32	.14838	.98893	.15004	.6646	.0112	.7392	28
33	.14867	.98889	.15034	.6514	.0112	.7262	27
34	.14896	.98884	.15064	.6383	.0113	.7132	26
35	0.14925	0.98880	0.15094	6.6252	1.0113	6.7003	25
36	.14954	.98876	.15123	.6122	.0114	.6874	24
37	.14982	.98871	.15153	.5992	.0114	.6745	23
38	.15011	.98867	.15183	.5863	.0115	.6617	22
39	.15040	.98862	.15213	.5734	.0115	.6490	21
40	0.15068	0.98858	0.15243	6.5605	1.0115	6.6363	20
41	.15097	.98854	.15272	.5478	.0116	.6237	19
42	.15126	.98849	.15302	.5350	.0116	.6111	18
43	.15155	.98845	.15332	.5223	.0117	.5985	17
44	.15183	.98840	.15362	.5097	.0117	.5860	16
45	0.15212	0.98836	0.15391	6.4971	1.0118	6.5736	15
46	.15241	.98832	.15421	.4845	.0118	.5612	14
47	.15270	.98827	.15451	.4720	.0119	.5488	13
48	.15298	.98823	.15481	.4596	.0119	.5365	12
49	.15328	.98818	.15511	.4472	.0119	.5243	11
50	0.15356	0.98814	0.15540	6.4348	1.0120	6.5121	10
51	.15385	.98809	.15570	.4225	.0120	.4999	9
52	.15413	.98805	.15600	.4103	.0121	.4878	8
53	.15442	.98800	.15630	.3980	.0121	.4757	7
54	.15471	.98796	.15659	.3859	.0122	.4637	6
55	0.15500	0.98791	0.15689	6.3737	1.0122	6.4517	5
56	.15528	.98787	.15719	.3616	.0123	.4398	4
57	.15557	.98782	.15749	.3496	.0123	.4279	3
58	.15586	.98778	.15779	.3376	.0124	.4160	2
59	.15615	.98773	.15809	.3257	.0124	.4041	1
60	0.15643	0.98769	0.15838	6.3137	1.0125	6.3924	0
M	Cosine	Sine	Cotan.	Tan.	Cosec.	Secant	M

81°

9°

M	Sine	Cosine	Tan.	Cotan.	Secant	Cosec.	M
0	0.15643	0.98769	0.15838	6.3137	1.0125	6.3924	60
1	.15672	.98761	.15868	.3019	.0125	.3807	59
2	.15701	.98760	.15898	.2901	.0125	.3690	58
3	.15730	.98755	.15928	.2783	.0126	.3574	57
4	.15758	.98750	.15958	.2665	.0126	.3458	56
5	0.15787	0.98746	0.15987	6.2548	1.0127	6.3343	55
6	.15816	.98711	.16017	.2432	.0127	.3228	54
7	.15844	.98737	.16047	.2316	.0128	.3113	53
8	.15873	.98732	.16077	.2200	.0128	.2999	52
9	.15902	.98727	.16107	.2085	.0129	.2885	51
10	0.15931	0.98723	0.16137	6.1970	1.0129	6.2772	50
11	.15959	.98718	.16167	.1856	.0130	.2659	49
12	.15988	.98714	.16196	.1742	.0130	.2546	48
13	.16017	.98709	.16226	.1628	.0131	.2434	47
14	.16045	.98704	.16256	.1515	.0131	.2322	46
15	0.16074	0.98700	0.16286	6.1402	1.0132	6.2211	45
16	.16103	.98695	.16316	.1290	.0132	.2100	44
17	.16132	.98690	.16346	.1178	.0133	.1990	43
18	.16160	.98685	.16376	.1066	.0133	.1880	42
19	.16189	.98681	.16105	.0955	.0134	.1770	41
20	0.16218	0.98676	0.16435	6.0844	1.0134	6.1661	40
21	.16246	.98671	.16165	.0734	.0135	.1552	39
22	.16275	.98667	.16495	.0624	.0135	.1443	38
23	.16304	.98662	.16525	.0514	.0136	.1335	37
24	.16333	.98657	.16555	.0405	.0136	.1227	36
25	0.16361	0.98652	0.16585	6.0296	1.0136	6.1120	35
26	.16390	.98648	.16615	.0188	.0137	.1013	34
27	.16419	.98643	.16644	.0080	.0137	.0906	33
28	.16447	.98638	.16674	5.9972	.0138	.0800	32
29	.16476	.98633	.16704	.9865	.0138	.0694	31
30	0.16505	0.98628	0.16734	5.9758	1.0139	6.0588	30
31	.16533	.98624	.16764	.9651	.0139	.0483	29
32	.16562	.98619	.16794	.9545	.0140	.0379	28
33	.16591	.98614	.16824	.9439	.0140	.0274	27
34	.16619	.98609	.16854	.9333	.0141	.0170	26
35	0.16648	0.98604	0.16884	5.9228	1.0141	6.0066	25
36	.16677	.98600	.16914	.9123	.0142	5.9963	24
37	.16705	.98595	.16944	.9019	.0142	.9860	23
38	.16734	.98590	.16973	.8915	.0143	.9758	22
39	.16763	.98585	.17003	.8811	.0143	.9655	21
40	0.16791	0.98580	0.17033	5.8708	1.0144	5.9554	20
41	.16820	.98575	.17063	.8605	.0141	.9452	19
42	.16849	.98570	.17093	.8502	.0145	.9351	18
43	.16878	.98565	.17123	.8400	.0145	.9250	17
44	.16906	.98560	.17153	.8298	.0146	.9150	16
45	0.16935	0.98556	0.17183	5.8196	1.0146	5.9049	15
46	.16964	.98551	.17213	.8095	.0147	.8950	14
47	.16992	.98546	.17243	.7994	.0147	.8850	13
48	.17021	.98511	.17273	.7894	.0148	.8751	12
49	.17050	.98536	.17303	.7794	.0148	.8652	11
50	0.17078	0.98531	0.17333	5.7694	1.0149	5.8554	10
51	.17107	.98526	.17363	.7594	.0150	.8456	9
52	.17136	.98521	.17393	.7495	.0150	.8358	8
53	.17164	.98516	.17423	.7396	.0151	.8261	7
54	.17193	.98511	.17453	.7297	.0151	.8163	6
55	0.17221	0.98506	0.17483	5.7199	1.0152	5.8067	5
56	.17250	.98501	.17513	.7101	.0152	.7970	4
57	.17279	.98496	.17543	.7004	.0153	.7874	3
58	.17307	.98491	.17573	.6906	.0153	.7778	2
59	.17336	.98486	.17603	.6809	.0154	.7681	1
60	0.17365	0.98481	0.17633	5.6713	1.0154	5.7588	0
M	Cosine	Sine	Cotan.	Tan.	Cosec.	Secant	M

80°

10°

M	Sine	Cosine	Tan.	Cotan.	Secant	Cosec.	M
0	0.17365	0.98481	0.17633	5.6713	1.0154	5.7588	60
1	.17393	.98476	.17663	.6616	.0155	.7493	59
2	.17422	.98471	.17693	.6520	.0155	.7398	58
3	.17451	.98465	.17723	.6425	.0156	.7304	57
4	.17479	.98460	.17753	.6329	.0156	.7210	56
5	0.17508	0.98455	0.17783	5.6234	1.0157	5.7117	55
6	.17537	.98450	.17813	.6140	.0157	.7023	54
7	.17565	.98445	.17843	.6045	.0158	.6930	53
8	.17594	.98440	.17873	.5951	.0158	.6838	52
9	.17622	.98435	.17903	.5857	.0159	.6745	51
10	0.17651	0.98430	0.17933	5.5764	1.0159	5.6653	50
11	.17680	.98425	.17963	.5670	.0160	.6561	49
12	.17708	.98419	.17993	.5578	.0160	.6470	48
13	.17737	.98414	.18023	.5485	.0161	.6379	47
14	.17766	.98409	.18053	.5393	.0162	.6288	46
15	0.17794	0.98404	0.18083	5.5301	1.0162	5.6197	45
16	.17823	.98399	.18113	.5209	.0163	.6107	44
17	.17852	.98394	.18143	.5117	.0163	.6017	43
18	.17880	.98388	.18173	.5026	.0164	.5928	42
19	.17909	.98383	.18203	.4936	.0164	.5838	41
20	0.17937	0.98378	0.18233	5.4845	1.0165	5.5749	40
21	.17966	.98373	.18263	.4755	.0165	.5660	39
22	.17995	.98368	.18293	.4665	.0166	.5572	38
23	.18023	.98362	.18323	.4575	.0166	.5484	37
24	.18052	.98357	.18353	.4486	.0167	.5396	36
25	0.18080	0.98352	0.18383	5.4396	1.0167	5.5308	35
26	.18109	.98347	.18413	.4308	.0168	.5221	34
27	.18138	.98341	.18444	.4219	.0169	.5134	33
28	.18166	.98336	.18474	.4131	.0169	.5047	32
29	.18195	.98331	.18504	.4043	.0170	.4960	31
30	0.18223	0.98325	0.18534	5.3955	1.0170	5.4874	30
31	.18252	.98320	.18564	.3868	.0171	.4788	29
32	.18281	.98315	.18594	.3780	.0171	.4702	28
33	.18309	.98309	.18624	.3694	.0172	.4617	27
34	.18338	.98304	.18654	.3607	.0172	.4532	26
35	0.18366	0.98299	0.18684	5.3521	1.0173	5.4447	25
36	.18395	.98293	.18714	.3434	.0174	.4362	24
37	.18424	.98288	.18745	.3349	.0174	.4278	23
38	.18452	.98283	.18775	.3263	.0175	.4194	22
39	.18481	.98277	.18805	.3178	.0175	.4110	21
40	0.18509	0.98272	0.18835	5.3093	1.0176	5.4026	20
41	.18538	.98267	.18865	.3008	.0176	.3943	19
42	.18567	.98261	.18895	.2923	.0177	.3860	18
43	.18595	.98256	.18925	.2839	.0177	.3777	17
44	.18624	.98250	.18955	.2755	.0178	.3695	16
45	0.18652	0.98245	0.18985	5.2671	1.0179	5.3612	15
46	.18681	.98240	.19016	.2588	.0179	.3530	14
47	.18709	.98234	.19046	.2505	.0180	.3449	13
48	.18738	.98229	.19076	.2422	.0180	.3367	12
49	.18767	.98223	.19106	.2339	.0181	.3286	11
50	0.18795	0.98218	0.19136	5.2257	1.0181	5.3205	10
51	.18824	.98212	.19166	.2174	.0182	.3124	9
52	.18852	.98207	.19197	.2092	.0182	.3044	8
53	.18881	.98201	.19227	.2011	.0183	.2963	7
54	.18909	.98196	.19257	.1929	.0184	.2883	6
55	0.18938	0.98190	0.19287	5.1848	1.0184	5.2803	5
56	.18967	.98185	.19317	.1767	.0185	.2724	4
57	.18995	.98179	.19347	.1686	.0185	.2645	3
58	.19024	.98174	.19378	.1606	.0186	.2566	2
59	.19052	.98168	.19408	.1525	.0186	.2487	1
60	0.19081	0.98163	0.19438	5.1445	1.0187	5.2408	0
M	Cosine	Sine	Cotan.	Tan.	Cosec.	Secant	M

79°

11°

M	Sine	Cosine	Tan.	Cotan.	Secant	Cosec.	M
0	0.19081	0.98163	0.19438	5.1445	1.0187	5.2408	60
1	.19109	.98157	.19468	.1366	.0188	.2330	59
2	.19138	.98152	.19498	.1286	.0188	.2252	58
3	.19166	.98146	.19529	.1207	.0189	.2174	57
4	.19195	.98140	.19559	.1128	.0189	.2097	56
5	0.19224	0.98135	0.19589	5.1049	1.0190	5.2019	55
6	.19252	.98129	.19619	.0970	.0191	.1942	54
7	.19281	.98124	.19649	.0892	.0191	.1865	53
8	.19309	.98118	.19680	.0814	.0192	.1788	52
9	.19338	.98112	.19710	.0736	.0192	.1712	51
10	0.19366	0.98107	0.19740	5.0658	1.0193	5.1636	50
11	.19395	.98101	.19770	.0581	.0193	.1560	49
12	.19423	.98095	.19800	.0504	.0194	.1484	48
13	.19452	.98090	.19831	.0427	.0195	.1409	47
14	.19480	.98084	.19861	.0350	.0195	.1333	46
15	0.19509	0.98078	0.19891	5.0273	1.0196	5.1258	45
16	.19537	.98073	.19921	.0197	.0196	.1183	44
17	.19566	.98067	.19952	.0121	.0197	.1109	43
18	.19595	.98061	.19982	.0045	.0198	.1034	42
19	.19623	.98056	.20012	4.9969	.0198	.0960	41
20	0.19652	0.98050	0.20042	4.9894	1.0199	5.0886	40
21	.19680	.98044	.20073	.9819	.0199	.0812	39
22	.19709	.98039	.20103	.9744	.0200	.0739	38
23	.19737	.98033	.20133	.9669	.0201	.0666	37
24	.19766	.98027	.20163	.9594	.0201	.0593	36
25	0.19794	0.98021	0.20194	4.9520	1.0202	5.0520	35
26	.19823	.98016	.20224	.9446	.0202	.0447	34
27	.19851	.98010	.20254	.9372	.0203	.0375	33
28	.19880	.98004	.20285	.9298	.0204	.0302	32
29	.19908	.97998	.20315	.9225	.0204	.0230	31
30	0.19937	0.97992	0.20345	4.9151	1.0205	5.0158	30
31	.19965	.97987	.20375	.9078	.0205	.0087	29
32	.19994	.97981	.20406	.9006	.0206	.0015	28
33	.20022	.97975	.20436	.8931	.0207	4.9941	27
34	.20051	.97969	.20166	.8860	.0207	.9873	26
35	0.20079	0.97963	0.20497	4.8788	1.0208	4.9802	25
36	.20108	.97957	.20527	.8716	.0208	.9732	24
37	.20136	.97952	.20557	.8644	.0209	.9661	23
38	.20165	.97946	.20588	.8573	.0210	.9591	22
39	.20193	.97940	.20618	.8501	.0210	.9521	21
40	0.20222	0.97934	0.20648	4.8430	1.0211	4.9452	20
41	.20250	.97928	.20679	.8359	.0211	.9382	19
42	.20279	.97922	.20709	.8288	.0212	.9313	18
43	.20307	.97916	.20739	.8217	.0213	.9243	17
44	.20336	.97910	.20770	.8147	.0213	.9175	16
45	0.20364	0.97904	0.20800	4.8077	1.0214	4.9106	15
46	.20393	.97899	.20830	.8007	.0215	.9037	14
47	.20421	.97893	.20861	.7937	.0215	.8969	13
48	.20450	.97887	.20891	.7867	.0216	.8901	12
49	.20478	.97881	.20921	.7798	.0216	.8833	11
50	0.20506	0.97875	0.20952	4.7728	1.0217	4.8765	10
51	.20535	.97869	.20982	.7659	.0218	.8697	9
52	.20563	.97863	.21012	.7591	.0218	.8630	8
53	.20592	.97857	.21043	.7522	.0219	.8563	7
54	.20620	.97851	.21073	.7453	.0220	.8496	6
55	0.20649	0.97845	0.21104	4.7385	1.0220	4.8429	5
56	.20677	.97839	.21134	.7317	.0221	.8362	4
57	.20706	.97833	.21164	.7249	.0221	.8296	3
58	.20734	.97827	.21195	.7181	.0222	.8229	2
59	.20763	.97821	.21225	.7114	.0223	.8163	1
60	0.20791	0.97815	0.21256	4.7046	1.0223	4.8097	0
M	Cosine	Sine	Cotan.	Tan.	Cosec.	Secant	M

78°

TABLES OF NATURAL TRIGONOMETRIC FUNCTIONS

13°

M	Sine	Cosine	Tan.	Cotan.	Secant	Cosec.	M
0	0.20791	0.97815	0.21256	4.7046	1.0223	4.8097	60
1	.20820	.97809	.21286	.6979	.0224	.8032	59
2	.20848	.97803	.21316	.6912	.0225	.7966	58
3	.20876	.97797	.21347	.6845	.0225	.7901	57
4	.20905	.97790	.21377	.6778	.0226	.7835	56
5	0.20933	0.97784	0.21408	4.6712	1.0226	4.7770	55
6	.20962	.97778	.21438	.6646	.0227	.7706	54
7	.20990	.97772	.21468	.6580	.0228	.7641	53
8	.21019	.97766	.21499	.6514	.0228	.7576	52
9	.21047	.97760	.21529	.6448	.0229	.7512	51
10	0.21076	0.97754	0.21560	4.6382	1.0230	4.7448	50
11	.21104	.97748	.21590	.6317	.0230	.7384	49
12	.21132	.97741	.21621	.6252	.0231	.7320	48
13	.21161	.97735	.21651	.6187	.0232	.7257	47
14	.21189	.97729	.21682	.6122	.0232	.7193	46
15	0.21218	0.97723	0.21712	4.6057	1.0233	4.7130	45
16	.21246	.97717	.21742	.5993	.0234	.7067	44
17	.21275	.97711	.21773	.5928	.0234	.7004	43
18	.21303	.97704	.21803	.5864	.0235	.6942	42
19	.21331	.97698	.21834	.5800	.0235	.6879	41
20	0.21360	0.97692	0.21864	4.5736	1.0236	4.6817	40
21	.21388	.97686	.21895	.5673	.0237	.6754	39
22	.21417	.97680	.21925	.5609	.0237	.6692	38
23	.21445	.97673	.21956	.5546	.0238	.6631	37
24	.21473	.97667	.21986	.5483	.0239	.6569	36
25	0.21502	0.97661	0.22017	4.5420	1.0239	4.6507	35
26	.21530	.97655	.22047	.5357	.0240	.6446	34
27	.21559	.97648	.22078	.5294	.0241	.6385	33
28	.21587	.97642	.22108	.5232	.0241	.6324	32
29	.21615	.97636	.22139	.5169	.0242	.6263	31
30	0.21644	0.97630	0.22169	4.5107	1.0243	4.6201	30
31	.21672	.97623	.22200	.5045	.0243	.6142	29
32	.21701	.97617	.22230	.4983	.0244	.6081	28
33	.21729	.97611	.22261	.4921	.0245	.6021	27
34	.21757	.97604	.22291	.4860	.0245	.5961	26
35	0.21786	0.97598	0.22322	4.4799	1.0246	4.5901	25
36	.21814	.97592	.22353	.4737	.0247	.5841	24
37	.21843	.97585	.22383	.4676	.0247	.5782	23
38	.21871	.97579	.22414	.4615	.0248	.5722	22
39	.21899	.97573	.22441	.4555	.0249	.5663	21
40	0.21928	0.97566	0.22475	4.4494	1.0249	4.5604	20
41	.21956	.97560	.22505	.4434	.0250	.5545	19
42	.21985	.97553	.22536	.4373	.0251	.5486	18
43	.22013	.97547	.22566	.4313	.0251	.5428	17
44	.22041	.97541	.22597	.4253	.0252	.5369	16
45	0.22070	0.97534	0.22628	4.4194	1.0253	4.5311	15
46	.22098	.97528	.22658	.4134	.0253	.5253	14
47	.22126	.97521	.22689	.4074	.0254	.5195	13
48	.22155	.97515	.22719	.4015	.0255	.5137	12
49	.22183	.97508	.22750	.3956	.0255	.5079	11
50	0.22211	0.97502	0.22781	4.3897	1.0256	4.5021	10
51	.22240	.97495	.22811	.3838	.0257	.4964	9
52	.22268	.97489	.22842	.3779	.0257	.4907	8
53	.22297	.97483	.22872	.3721	.0258	.4850	7
54	.22325	.97476	.22903	.3662	.0259	.4793	6
55	0.22353	0.97470	0.22934	4.3604	1.0260	4.4736	5
56	.22382	.97463	.22964	.3546	.0260	.4679	4
57	.22410	.97457	.22995	.3488	.0261	.4623	3
58	.22438	.97450	.23025	.3430	.0262	.4566	2
59	.22467	.97443	.23056	.3372	.0262	.4510	1
60	0.22495	0.97437	0.23087	4.3315	1.0263	4.4454	0
M	Cosine	Sine	Cotan.	Tan.	Cosec.	Secant	M

77°

13°

M	Sine	Cosine	Tan.	Cotan.	Secant	Cosec.	M
0	0.22495	0.97437	0.23087	4.3315	1.0263	4.4454	60
1	.22523	.97430	.23117	.3257	.0264	.4398	59
2	.22552	.97424	.23148	.3200	.0264	.4342	58
3	.22580	.97417	.23179	.3143	.0265	.4287	57
4	.22608	.97411	.23209	.3086	.0266	.4231	56
5	0.22637	0.97404	0.23240	4.3029	1.0266	4.4176	55
6	.22665	.97398	.23270	.2972	.0267	.4121	54
7	.22693	.97391	.23301	.2916	.0268	.4065	53
8	.22722	.97384	.23332	.2859	.0268	.4011	52
9	.22750	.97378	.23363	.2803	.0269	.3956	51
10	0.22778	0.97371	0.23393	4.2747	1.0270	4.3901	50
11	.22807	.97364	.23424	.2691	.0271	.3847	49
12	.22835	.97358	.23455	.2635	.0271	.3792	48
13	.22863	.97351	.23485	.2579	.0272	.3738	47
14	.22892	.97344	.23516	.2524	.0273	.3684	46
15	0.22920	0.97338	0.23547	4.2468	1.0273	4.3630	45
16	.22948	.97331	.23577	.2413	.0274	.3576	44
17	.22977	.97324	.23608	.2358	.0275	.3522	43
18	.23005	.97318	.23639	.2303	.0276	.3469	42
19	.23033	.97311	.23670	.2248	.0276	.3415	41
20	0.23061	0.97304	0.23700	4.2193	1.0277	4.3362	40
21	.23090	.97298	.23731	.2139	.0278	.3309	39
22	.23118	.97291	.23762	.2084	.0278	.3256	38
23	.23146	.97284	.23793	.2030	.0279	.3203	37
24	.23175	.97277	.23823	.1976	.0280	.3150	36
25	0.23203	0.97271	0.23854	4.1921	1.0280	4.3098	35
26	.23231	.97264	.23885	.1867	.0281	.3045	34
27	.23260	.97257	.23916	.1814	.0282	.2993	33
28	.23288	.97250	.23946	.1760	.0283	.2941	32
29	.23316	.97244	.23977	.1706	.0283	.2888	31
30	0.23344	0.97237	0.24008	4.1653	1.0284	4.2836	30
31	.23373	.97230	.24039	.1600	.0285	.2785	29
32	.23401	.97223	.24069	.1546	.0285	.2733	28
33	.23429	.97216	.24100	.1493	.0286	.2681	27
34	.23458	.97210	.24131	.1440	.0287	.2630	26
35	0.23486	0.97203	0.24162	4.1388	1.0288	4.2579	25
36	.23514	.97196	.24192	.1335	.0288	.2527	24
37	.23542	.97189	.24223	.1282	.0289	.2476	23
38	.23571	.97182	.24254	.1230	.0290	.2425	22
39	.23599	.97175	.24285	.1178	.0291	.2375	21
40	0.23627	0.97169	0.24316	4.1126	1.0291	4.2324	20
41	.23655	.97162	.24346	.1073	.0292	.2273	19
42	.23684	.97155	.24377	.1022	.0293	.2223	18
43	.23712	.97148	.24408	.0970	.0293	.2173	17
44	.23740	.97141	.24439	.0918	.0294	.2122	16
45	0.23768	0.97134	0.24470	4.0867	1.0295	4.2072	15
46	.23797	.97127	.24501	.0815	.0296	.2022	14
47	.23825	.97120	.24531	.0764	.0296	.1972	13
48	.23853	.97113	.24562	.0713	.0297	.1923	12
49	.23881	.97106	.24593	.0662	.0298	.1873	11
50	0.23910	0.97099	0.24624	4.0611	1.0299	4.1824	10
51	.23938	.97092	.24655	.0560	.0299	.1774	9
52	.23966	.97086	.24686	.0509	.0300	.1725	8
53	.23994	.97079	.24717	.0458	.0301	.1676	7
54	.24023	.97072	.24747	.0408	.0302	.1627	6
55	0.24051	0.97065	0.24778	4.0358	1.0302	4.1578	5
56	.24079	.97058	.24809	.0307	.0303	.1529	4
57	.24107	.97051	.24840	.0257	.0304	.1481	3
58	.24136	.97044	.24871	.0207	.0305	.1432	2
59	.24164	.97037	.24902	.0157	.0305	.1384	1
60	0.24192	0.97029	0.24933	4.0108	1.0306	4.1336	0
M	Cosine	Sine	Cotan.	Tan.	Cosec.	Secant	M

76°

14°

M	Sine	Cosine	Tan.	Cotan.	Secant	Cosec.	M
0	0.24192	0.97029	0.24933	4.0108	1.0306	4.1336	60
1	.24220	.97022	.24964	.0058	.0307	.1287	59
2	.24249	.97015	.24995	.0009	.0308	.1239	58
3	.24277	.97008	.25025	3.9959	.0308	.1191	57
4	.24305	.97001	.25056	.9910	.0309	.1144	56
5	0.24333	0.96994	0.25087	3.9861	1.0310	4.1096	55
6	.24361	.96987	.25118	.9812	.0311	.1048	54
7	.24390	.96980	.25149	.9763	.0311	.1001	53
8	.24418	.96973	.25180	.9714	.0312	.0953	52
9	.24446	.96966	.25211	.9665	.0313	.0906	51
10	0.24474	0.96959	0.25242	3.9616	1.0314	4.0859	50
11	.24502	.96952	.25273	.9568	.0314	.0812	49
12	.24531	.96944	.25304	.9520	.0315	.0765	48
13	.24559	.96937	.25335	.9471	.0316	.0718	47
14	.24587	.96930	.25366	.9423	.0317	.0672	46
15	0.24615	0.96923	0.25397	3.9375	1.0317	4.0625	45
16	.24643	.96916	.25428	.9327	.0318	.0579	44
17	.24672	.96909	.25459	.9279	.0319	.0532	43
18	.24700	.96901	.25490	.9231	.0320	.0486	42
19	.24728	.96894	.25521	.9184	.0320	.0440	41
20	0.24756	0.96887	0.25552	3.9136	1.0321	4.0394	40
21	.24784	.96880	.25583	.9089	.0322	.0348	39
22	.24813	.96873	.25614	.9042	.0323	.0302	38
23	.24841	.96865	.25645	.8994	.0323	.0256	37
24	.24869	.96858	.25676	.8947	.0324	.0211	36
25	0.24897	0.96851	0.25707	3.8900	1.0325	4.0165	35
26	.24925	.96844	.25738	.8853	.0326	.0120	34
27	.24953	.96836	.25769	.8807	.0327	.0074	33
28	.24982	.96829	.25800	.8760	.0327	.0029	32
29	.25010	.96822	.25831	.8713	.0328	3.9984	31
30	0.25038	0.96815	0.25862	3.8667	1.0329	3.9939	30
31	.25066	.96807	.25893	.8621	.0330	.9894	29
32	.25094	.96800	.25924	.8574	.0330	.9850	28
33	.25122	.96793	.25955	.8528	.0331	.9805	27
34	.25151	.96785	.25986	.8482	.0332	.9760	26
35	0.25179	0.96778	0.26017	3.8436	1.0333	3.9716	25
36	.25207	.96771	.26048	.8390	.0334	.9672	24
37	.25235	.96763	.26079	.8345	.0334	.9627	23
38	.25263	.96756	.26110	.8299	.0335	.9583	22
39	.25291	.96749	.26141	.8254	.0336	.9539	21
40	0.25319	0.96741	0.26172	3.8208	1.0337	3.9495	20
41	.25348	.96734	.26203	.8163	.0338	.9451	19
42	.25376	.96727	.26234	.8118	.0338	.9408	18
43	.25404	.96719	.26266	.8073	.0339	.9364	17
44	.25432	.96712	.26297	.8027	.0340	.9320	16
45	0.25460	0.96704	0.26328	3.7983	1.0341	3.9277	15
46	.25488	.96697	.26359	.7938	.0341	.9234	14
47	.25516	.96690	.26390	.7893	.0342	.9190	13
48	.25544	.96682	.26421	.7848	.0343	.9147	12
49	.25573	.96675	.26452	.7804	.0344	.9104	11
50	0.25601	0.96667	0.26483	3.7759	1.0345	3.9061	10
51	.25629	.96660	.26514	.7715	.0345	.9018	9
52	.25657	.96652	.26546	.7671	.0346	.8976	8
53	.25685	.96645	.26577	.7627	.0347	.8933	7
54	.25713	.96638	.26608	.7583	.0348	.8890	6
55	0.25741	0.96630	0.26639	3.7539	1.0349	3.8848	5
56	.25769	.96623	.26670	.7495	.0349	.8805	4
57	.25798	.96615	.26701	.7451	.0350	.8763	3
58	.25826	.96608	.26732	.7407	.0351	.8721	2
59	.25854	.96600	.26764	.7364	.0352	.8679	1
60	0.25882	0.96592	0.26795	3.7320	1.0353	3.8637	0
M	Cosine	Sine	Cotan.	Tan.	Cosec.	Secant	M

75°

15°

M	Sine	Cosine	Tan.	Cotan.	Secant	Cosec.	M
0	0.25882	0.96592	0.26795	3.7320	1.0353	3.8637	60
1	.25910	.96585	.26826	.7277	.0353	.8595	59
2	.25938	.96577	.26857	.7234	.0354	.8553	58
3	.25966	.96570	.26888	.7191	.0355	.8512	57
4	.25994	.96562	.26920	.7147	.0356	.8470	56
5	0.26022	0.96555	0.26951	3.7104	1.0357	3.8428	55
6	.26050	.96547	.26982	.7062	.0358	.8387	54
7	.26078	.96540	.27013	.7019	.0358	.8346	53
8	.26107	.96532	.27044	.6976	.0359	.8304	52
9	.26135	.96524	.27076	.6933	.0360	.8263	51
10	0.26163	0.96517	0.27107	3.6891	1.0361	3.8222	50
11	.26191	.96509	.27138	.6848	.0362	.8181	49
12	.26219	.96502	.27169	.6806	.0362	.8140	48
13	.26247	.96491	.27201	.6764	.0363	.8100	47
14	.26275	.96486	.27232	.6722	.0364	.8059	46
15	0.26303	0.96479	0.27263	3.6679	1.0365	3.8018	45
16	.26331	.96471	.27294	.6637	.0366	.7978	44
17	.26359	.96463	.27326	.6596	.0367	.7937	43
18	.26387	.96456	.27357	.6554	.0367	.7897	42
19	.26415	.96448	.27388	.6512	.0368	.7857	41
20	0.26443	0.96440	0.27419	3.6470	1.0369	3.7816	40
21	.26471	.96433	.27451	.6429	.0370	.7776	39
22	.26499	.96425	.27482	.6387	.0371	.7736	38
23	.26527	.96417	.27513	.6346	.0371	.7697	37
24	.26556	.96409	.27544	.6305	.0372	.7657	36
25	0.26584	0.96402	0.27576	3.6263	1.0373	3.7617	35
26	.26612	.96394	.27607	.6222	.0374	.7577	34
27	.26640	.96386	.27638	.6181	.0375	.7538	33
28	.26668	.96378	.27670	.6140	.0376	.7498	32
29	.26696	.96371	.27701	.6100	.0376	.7459	31
30	0.26724	0.96363	0.27732	3.6059	1.0377	3.7420	30
31	.26752	.96355	.27764	.6018	.0378	.7380	29
32	.26780	.96347	.27795	.5977	.0379	.7341	28
33	.26808	.96340	.27826	.5937	.0380	.7302	27
34	.26836	.96332	.27858	.5896	.0381	.7263	26
35	0.26864	0.96324	0.27889	3.5856	1.0382	3.7224	25
36	.26892	.96316	.27920	.5816	.0382	.7186	24
37	.26920	.96308	.27952	.5776	.0383	.7147	23
38	.26948	.96301	.27983	.5736	.0384	.7108	22
39	.26976	.96293	.28014	.5696	.0385	.7070	21
40	0.27004	0.96285	0.28046	3.5656	1.0386	3.7031	20
41	.27032	.96277	.28077	.5616	.0387	.6993	19
42	.27060	.96269	.28109	.5576	.0387	.6955	18
43	.27088	.96261	.28140	.5536	.0388	.6917	17
44	.27116	.96253	.28171	.5497	.0389	.6878	16
45	0.27144	0.96245	0.28203	3.5457	1.0390	3.6840	15
46	.27172	.96238	.28234	.5418	.0391	.6802	14
47	.27200	.96230	.28266	.5378	.0392	.6765	13
48	.27228	.96222	.28297	.5339	.0393	.6727	12
49	.27256	.96214	.28328	.5300	.0393	.6689	11
50	0.27281	0.96206	0.28360	3.5261	1.0394	3.6651	10
51	.27312	.96198	.28391	.5222	.0395	.6614	9
52	.27340	.96190	.28423	.5183	.0396	.6576	8
53	.27368	.96182	.28454	.5144	.0397	.6539	7
54	.27396	.96174	.28486	.5105	.0398	.6502	6
55	0.27424	0.96166	0.28517	3.5066	1.0399	3.6464	5
56	.27452	.96158	.28549	.5028	.0399	.6427	4
57	.27480	.96150	.28580	.4989	.0400	.6390	3
58	.27508	.96142	.28611	.4951	.0401	.6353	2
59	.27536	.96134	.28643	.4912	.0402	.6316	1
60	0.27564	0.96126	0.28674	3.4874	1.0403	3.6279	0
M	Cosine	Sine	Cotan.	Tan.	Cosec.	Secant	M

74°

16°

M	Sine	Cosine	Tan.	Cotan.	Secant	Cosec.	M
0	0.27564	0.96126	0.28674	3.4874	1.0403	3.6279	60
1	.27592	.96118	.28706	.4836	.0404	.6243	59
2	.27620	.96110	.28737	.4798	.0405	.6206	58
3	.27648	.96102	.28769	.4760	.0406	.6169	57
4	.27675	.96094	.28800	.4722	.0406	.6133	56
5	0.27703	0.96086	0.28832	3.4684	1.0407	3.6096	55
6	.27731	.96078	.28863	.4646	.0408	.6060	54
7	.27759	.96070	.28895	.4608	.0409	.6024	53
8	.27787	.96062	.28926	.4570	.0410	.5987	52
9	.27815	.96054	.28958	.4533	.0411	.5951	51
10	0.27843	0.96045	0.28990	3.4495	1.0412	3.5915	50
11	.27871	.96037	.29021	.4458	.0413	.5879	49
12	.27899	.96029	.29053	.4420	.0413	.5843	48
13	.27927	.96021	.29084	.4383	.0414	.5807	47
14	.27955	.96013	.29116	.4346	.0415	.5772	46
15	0.27983	0.96005	0.29147	3.4308	1.0416	3.5736	45
16	.28011	.95997	.29179	.4271	.0417	.5700	44
17	.28039	.95989	.29210	.4234	.0418	.5665	43
18	.28067	.95980	.29242	.4197	.0419	.5629	42
19	.28094	.95972	.29274	.4160	.0420	.5594	41
20	0.28122	0.95964	0.29305	3.4124	1.0420	3.5559	40
21	.28150	.95956	.29337	.4087	.0421	.5523	39
22	.28178	.95948	.29368	.4050	.0422	.5488	38
23	.28206	.95940	.29400	.4014	.0423	.5453	37
24	.28234	.95931	.29432	.3977	.0424	.5418	36
25	0.28262	0.95923	0.29463	3.3941	1.0425	3.5383	35
26	.28290	.95915	.29495	.3904	.0426	.5348	34
27	.28318	.95907	.29526	.3868	.0427	.5313	33
28	.28346	.95898	.29558	.3832	.0428	.5279	32
29	.28374	.95890	.29590	.3795	.0428	.5244	31
30	0.28401	0.95882	0.29621	3.3759	1.0429	3.5209	30
31	.28429	.95874	.29653	.3723	.0430	.5175	29
32	.28457	.95865	.29685	.3687	.0431	.5140	28
33	.28485	.95857	.29716	.3651	.0432	.5106	27
34	.28513	.95849	.29748	.3616	.0433	.5072	26
35	0.28541	0.95840	0.29780	3.3580	1.0434	3.5037	25
36	.28569	.95832	.29811	.3544	.0435	.5003	24
37	.28597	.95824	.29843	.3509	.0436	.4969	23
38	.28624	.95816	.29875	.3473	.0437	.4935	22
39	.28652	.95807	.29906	.3438	.0438	.4901	21
40	0.28680	0.95799	0.29938	3.3402	1.0438	3.4867	20
41	.28708	.95791	.29970	.3367	.0439	.4833	19
42	.28736	.95782	.30001	.3332	.0440	.4799	18
43	.28764	.95774	.30033	.3296	.0441	.4766	17
44	.28792	.95765	.30065	.3261	.0442	.4732	16
45	0.28820	0.95757	0.30096	3.3226	1.0443	3.4698	15
46	.28847	.95749	.30128	.3191	.0444	.4665	14
47	.28875	.95740	.30160	.3156	.0445	.4632	13
48	.28903	.95732	.30192	.3121	.0446	.4598	12
49	.28931	.95723	.30223	.3087	.0447	.4565	11
50	0.28959	0.95715	0.30255	3.3052	1.0448	3.4532	10
51	.28987	.95707	.30287	.3017	.0448	.4498	9
52	.29014	.95698	.30319	.2983	.0449	.4465	8
53	.29042	.95690	.30350	.2948	.0450	.4432	7
54	.29070	.95681	.30382	.2914	.0451	.4399	6
55	0.29098	0.95673	0.30414	3.2879	1.0452	3.4366	5
56	.29126	.95664	.30446	.2845	.0453	.4334	4
57	.29154	.95656	.30478	.2811	.0454	.4301	3
58	.29181	.95647	.30509	.2777	.0455	.4268	2
59	.29209	.95639	.30541	.2742	.0456	.4236	1
60	0.29237	0.95630	0.30573	3.2708	1.0457	3.4203	0
M	Cosine	Sine	Cotan.	Tan.	Cosec.	Secant	M

73°

17°

M	Sine	Cosine	Tan.	Cotan.	Secant	Cosec.	M
0	0.29237	0.95630	0.30573	3.2708	1.0457	3.4203	60
1	.29265	.95622	.30605	.2674	.0458	.4170	59
2	.29293	.95613	.30637	.2640	.0459	.4138	58
3	.29321	.95605	.30668	.2607	.0460	.4106	57
4	.29348	.95596	.30700	.2573	.0461	.4073	56
5	0.29376	0.95588	0.30732	3.2539	1.0461	3.4041	55
6	.29404	.95579	.30764	.2506	.0462	.4009	54
7	.29432	.95571	.30796	.2472	.0463	.3977	53
8	.29460	.95562	.30828	.2438	.0464	.3945	52
9	.29487	.95554	.30859	.2405	.0465	.3913	51
10	0.29515	0.95545	0.30891	3.2371	1.0466	3.3881	50
11	.29543	.95536	.30923	.2338	.0467	.3849	49
12	.29571	.95528	.30955	.2305	.0468	.3817	48
13	.29598	.95519	.30987	.2271	.0469	.3785	47
14	.29626	.95511	.31019	.2238	.0470	.3754	46
15	0.29654	0.95502	0.31051	3.2205	1.0471	3.3722	45
16	.29682	.95493	.31083	.2172	.0472	.3690	44
17	.29710	.95485	.31115	.2139	.0473	.3659	43
18	.29737	.95476	.31146	.2106	.0474	.3627	42
19	.29765	.95467	.31178	.2073	.0475	.3596	41
20	0.29793	0.95459	0.31210	3.2041	1.0476	3.3565	40
21	.29821	.95450	.31242	.2008	.0477	.3534	39
22	.29848	.95441	.31274	.1975	.0478	.3502	38
23	.29876	.95433	.31306	.1942	.0478	.3471	37
24	.29904	.95424	.31338	.1910	.0479	.3440	36
25	0.29932	0.95415	0.31370	3.1877	1.0480	3.3409	35
26	.29959	.95407	.31402	.1845	.0481	.3378	34
27	.29987	.95398	.31434	.1813	.0482	.3347	33
28	.30015	.95389	.31466	.1780	.0483	.3316	32
29	.30043	.95380	.31498	.1748	.0484	.3286	31
30	0.30070	0.95372	0.31530	3.1716	1.0485	3.3255	30
31	.30098	.95363	.31562	.1684	.0486	.3224	29
32	.30126	.95354	.31594	.1652	.0487	.3194	28
33	.30154	.95345	.31626	.1620	.0488	.3163	27
34	.30181	.95337	.31658	.1588	.0489	.3133	26
35	0.30209	0.95328	0.31690	3.1556	1.0490	3.3102	25
36	.30237	.95319	.31722	.1524	.0491	.3072	24
37	.30265	.95310	.31754	.1492	.0492	.3042	23
38	.30292	.95301	.31786	.1460	.0493	.3011	22
39	.30320	.95293	.31818	.1429	.0494	.2981	21
40	0.30348	0.95284	0.31850	3.1397	1.0495	3.2951	20
41	.30375	.95275	.31882	.1366	.0496	.2921	19
42	.30403	.95266	.31914	.1334	.0497	.2891	18
43	.30431	.95257	.31946	.1303	.0498	.2861	17
44	.30459	.95248	.31978	.1271	.0499	.2831	16
45	0.30486	0.95239	0.32010	3.1240	1.0500	3.2801	15
46	.30514	.95231	.32042	.1209	.0501	.2772	14
47	.30542	.95222	.32074	.1177	.0502	.2742	13
48	.30569	.95213	.32106	.1146	.0503	.2712	12
49	.30597	.95204	.32138	.1115	.0504	.2683	11
50	0.30625	0.95195	0.32171	3.1084	1.0505	3.2653	10
51	.30653	.95186	.32203	.1053	.0506	.2624	9
52	.30680	.95177	.32235	.1022	.0507	.2594	8
53	.30708	.95168	.32267	.0991	.0508	.2565	7
54	.30736	.95159	.32299	.0960	.0509	.2535	6
55	0.30763	0.95150	0.32331	3.0930	1.0510	3.2506	5
56	.30791	.95141	.32363	.0899	.0511	.2477	4
57	.30819	.95132	.32395	.0868	.0512	.2448	3
58	.30846	.95124	.32428	.0838	.0513	.2419	2
59	.30874	.95115	.32460	.0807	.0514	.2390	1
60	0.30902	0.95106	0.32492	3.0777	1.0515	3.2361	0
M	Cosine	Sine	Cotan.	Tan.	Cosec.	Secant	M

72°

TABLES OF NATURAL TRIGONOMETRIC FUNCTIONS

18°

M	Sine	Cosine	Tan.	Cotan.	Secant	Cosec.	M
0	0.30902	0.95106	0.32492	3.0777	1.0515	3.2361	60
1	.30929	.95097	.32524	.0746	.0516	.2332	59
2	.30957	.95088	.32556	.0716	.0517	.2303	58
3	.30985	.95079	.32588	.0686	.0518	.2274	57
4	.31012	.95070	.32621	.0655	.0519	.2245	56
5	0.31040	0.95061	0.32653	3.0625	1.0520	3.2216	55
6	.31068	.95051	.32685	.0595	.0521	.2188	54
7	.31095	.95042	.32717	.0565	.0522	.2159	53
8	.31123	.95033	.32749	.0535	.0523	.2131	52
9	.31150	.95024	.32782	.0505	.0524	.2102	51
10	0.31178	0.95015	0.32814	3.0475	1.0525	3.2074	50
11	.31206	.95006	.32846	.0445	.0526	.2045	49
12	.31233	.94997	.32878	.0415	.0527	.2017	48
13	.31261	.94988	.32910	.0385	.0528	.1989	47
14	.31289	.94979	.32943	.0356	.0529	.1960	46
15	0.31316	0.94970	0.32975	3.0326	1.0530	3.1932	45
16	.31344	.94961	.33007	.0296	.0531	.1904	44
17	.31372	.94952	.33039	.0267	.0532	.1876	43
18	.31399	.94942	.33072	.0237	.0533	.1848	42
19	.31427	.94933	.33104	.0208	.0534	.1820	41
20	0.31454	0.94924	0.33136	3.0178	1.0535	3.1792	40
21	.31482	.94915	.33169	.0149	.0536	.1764	39
22	.31510	.94906	.33201	.0120	.0537	.1736	38
23	.31537	.94897	.33233	.0090	.0538	.1708	37
24	.31565	.94888	.33265	.0061	.0539	.1681	36
25	0.31592	0.91878	0.33298	3.0032	1.0540	3.1653	35
26	.31620	.94869	.33330	.0003	.0541	.1625	34
27	.31648	.94860	.33362	2.9974	.0542	.1598	33
28	.31675	.94851	.33395	.9945	.0543	.1570	32
29	.31703	.94841	.33427	.9916	.0544	.1543	31
30	0.31730	0.94832	0.33459	2.9887	1.0545	3.1515	30
31	.31758	.94823	.33492	.9858	.0546	.1488	29
32	.31786	.94814	.33524	.9829	.0547	.1461	28
33	.31813	.94805	.33557	.9800	.0548	.1433	27
34	.31841	.94795	.33589	.9772	.0549	.1406	26
35	0.31868	0.94786	0.33621	2.9743	1.0550	3.1379	25
36	.31896	.94777	.33654	.9714	.0551	.1352	24
37	.31923	.94767	.33686	.9686	.0552	.1325	23
38	.31951	.94758	.33718	.9657	.0553	.1298	22
39	.31978	.94749	.33751	.9629	.0554	.1271	21
40	0.32006	0.94740	0.33783	2.9600	1.0555	3.1244	20
41	.32034	.94730	.33816	.9572	.0556	.1217	19
42	.32061	.94721	.33848	.9544	.0557	.1190	18
43	.32089	.94712	.33880	.9515	.0558	.1163	17
44	.32116	.94702	.33913	.9487	.0559	.1137	16
45	0.32144	0.94693	0.33945	2.9459	1.0560	3.1110	15
46	.32171	.94684	.33978	.9431	.0561	.1083	14
47	.32199	.94674	.34010	.9403	.0562	.1057	13
48	.32226	.94665	.34043	.9375	.0563	.1030	12
49	.32254	.94655	.34075	.9347	.0565	.1004	11
50	0.32282	0.94646	0.34108	2.9319	1.0566	3.0977	10
51	.32309	.94637	.34140	.9291	.0567	.0951	9
52	.32337	.94627	.34173	.9263	.0568	.0925	8
53	.32364	.94618	.34205	.9235	.0569	.0898	7
54	.32392	.94608	.34238	.9208	.0570	.0872	6
55	0.32419	0.94599	0.34270	2.9180	1.0571	3.0846	5
56	.32447	.94590	.34303	.9152	.0572	.0820	4
57	.32474	.94580	.34335	.9125	.0573	.0793	3
58	.32502	.94571	.34368	.9097	.0574	.0767	2
59	.32529	.94561	.34400	.9069	.0575	.0741	1
60	0.32557	0.94552	0.34433	2.9042	1.0576	3.0715	0
M	Cosine	Sine	Cotan.	Tan.	Cosec.	Secant	M

71°

19°

M	Sine	Cosine	Tan.	Cotan.	Secant	Cosec.	M
0	0.32557	0.94552	0.34433	2.9042	1.0576	3.0715	60
1	.32584	.94542	.34465	.9015	.0577	.0690	59
2	.32612	.94533	.34498	.8987	.0578	.0664	58
3	.32639	.94523	.34530	.8960	.0579	.0638	57
4	.32667	.94514	.34563	.8933	.0580	.0612	56
5	0.32694	0.94504	0.34595	2.8905	1.0581	3.0586	55
6	.32722	.94495	.34628	.8878	.0582	.0561	54
7	.32749	.94485	.34661	.8851	.0584	.0535	53
8	.32777	.94476	.34693	.8824	.0585	.0509	52
9	.32804	.94466	.34726	.8797	.0586	.0484	51
10	0.32832	0.94457	0.34758	2.8770	1.0587	3.0458	50
11	.32859	.94447	.34791	.8743	.0588	.0433	49
12	.32887	.94438	.34824	.8716	.0589	.0407	48
13	.32914	.94428	.34856	.8689	.0590	.0382	47
14	.32942	.94418	.34889	.8662	.0591	.0357	46
15	0.32969	0.94409	0.34921	2.8636	1.0592	3.0331	45
16	.32996	.94399	.34954	.8609	.0593	.0306	44
17	.33024	.94390	.34987	.8582	.0594	.0281	43
18	.33051	.94380	.35019	.8555	.0595	.0256	42
19	.33079	.94370	.35052	.8529	.0596	.0231	41
20	0.33106	0.94361	0.35085	2.8502	1.0598	3.0206	40
21	.33134	.94351	.35117	.8476	.0599	.0181	39
22	.33161	.94341	.35150	.8449	.0600	.0156	38
23	.33189	.94332	.35183	.8423	.0601	.0131	37
24	.33216	.94322	.35215	.8396	.0602	.0106	36
25	0.33243	0.94313	0.35248	2.8370	1.0603	3.0081	35
26	.33271	.94303	.35281	.8344	.0604	.0056	34
27	.33298	.94293	.35314	.8318	.0605	.0031	33
28	.33326	.94283	.35346	.8291	.0606	.0007	32
29	.33353	.94274	.35379	.8265	.0607	2.9982	31
30	0.33381	0.94264	0.35412	2.8239	1.0608	2.9957	30
31	.33408	.94254	.35445	.8213	.0609	.9933	29
32	.33435	.94245	.35477	.8187	.0611	.9908	28
33	.33463	.94235	.35510	.8161	.0612	.9884	27
34	.33490	.94225	.35543	.8135	.0613	.9859	26
35	0.33518	0.94215	0.35576	2.8109	1.0614	2.9835	25
36	.33545	.94206	.35608	.8083	.0615	.9810	24
37	.33572	.94196	.35641	.8057	.0616	.9786	23
38	.33600	.94186	.35674	.8032	.0617	.9762	22
39	.33627	.94176	.35707	.8006	.0618	.9738	21
40	0.33655	0.94167	0.35739	2.7980	1.0619	2.9713	20
41	.33682	.94157	.35772	.7954	.0620	.9689	19
42	.33709	.94147	.35805	.7929	.0622	.9665	18
43	.33737	.94137	.35838	.7903	.0623	.9641	17
44	.33764	.94127	.35871	.7878	.0624	.9617	16
45	0.33792	0.94118	0.35901	2.7852	1.0625	2.9593	15
46	.33819	.94108	.35936	.7827	.0626	.9569	14
47	.33846	.94098	.35969	.7801	.0627	.9545	13
48	.33874	.94088	.36002	.7776	.0628	.9521	12
49	.33901	.94078	.36035	.7751	.0629	.9497	11
50	0.33928	0.94068	0.36068	2.7725	1.0630	2.9474	10
51	.33956	.94058	.36101	.7700	.0632	.9450	9
52	.33983	.94049	.36134	.7675	.0633	.9426	8
53	.34011	.94039	.36167	.7650	.0634	.9402	7
54	.34038	.94029	.36199	.7625	.0635	.9379	6
55	0.34065	0.94019	0.36232	2.7600	1.0636	2.9355	5
56	.34093	.94009	.36265	.7575	.0637	.9332	4
57	.34120	.93999	.36298	.7550	.0638	.9308	3
58	.34147	.93989	.36331	.7525	.0639	.9285	2
59	.34175	.93979	.36364	.7500	.0641	.9261	1
60	0.34202	0.93969	0.36397	2.7475	1.0642	2.9238	0
M	Cosine	Sine	Cotan.	Tan.	Cosec.	Secant	M

70°

20°

M	Sine	Cosine	Tan.	Cotan.	Secant	Cosec.	M
0	0.34202	0.93969	0.36397	2.7475	1.0642	2.9238	60
1	.34229	.93959	.36430	.7450	.0643	.9215	59
2	.34257	.93949	.36463	.7425	.0644	.9191	58
3	.34284	.93939	.36496	.7400	.0645	.9168	57
4	.34311	.93929	.36529	.7376	.0646	.9145	56
5	0.34339	0.93919	0.36562	2.7351	1.0647	2.9122	55
6	.34366	.93909	.36595	.7326	.0648	.9098	54
7	.34393	.93899	.36628	.7302	.0650	.9075	53
8	.34421	.93889	.36661	.7277	.0651	.9052	52
9	.34448	.93879	.36694	.7252	.0652	.9029	51
10	0.34475	0.93869	0.36727	2.7228	1.0653	2.9006	50
11	.34502	.93859	.36760	.7204	.0654	.8983	49
12	.34530	.93849	.36793	.7179	.0655	.8960	48
13	.34557	.93839	.36826	.7155	.0656	.8937	47
14	.34584	.93829	.36859	.7130	.0658	.8915	46
15	0.34612	0.93819	0.36892	2.7106	1.0659	2.8892	45
16	.34639	.93809	.36925	.7082	.0660	.8869	44
17	.34666	.93799	.36958	.7058	.0661	.8846	43
18	.34693	.93789	.36991	.7033	.0662	.8824	42
19	.34721	.93779	.37024	.7009	.0663	.8801	41
20	0.34748	0.93769	0.37057	2.6985	1.0664	2.8778	40
21	.34775	.93758	.37090	.6961	.0666	.8756	39
22	.34803	.93748	.37123	.6937	.0667	.8733	38
23	.34830	.93738	.37156	.6913	.0668	.8711	37
24	.34857	.93728	.37190	.6889	.0669	.8688	36
25	0.34884	0.93718	0.37223	2.6865	1.0670	2.8666	35
26	.34912	.93708	.37256	.6841	.0671	.8644	34
27	.34939	.93698	.37289	.6817	.0673	.8621	33
28	.34966	.93687	.37322	.6794	.0674	.8599	32
29	.34993	.93677	.37355	.6770	.0675	.8577	31
30	0.35021	0.93667	0.37388	2.6746	1.0676	2.8554	30
31	.35048	.93657	.37422	.6722	.0677	.8532	29
32	.35075	.93647	.37455	.6699	.0678	.8510	28
33	.35102	.93637	.37488	.6675	.0679	.8488	27
34	.35130	.93626	.37521	.6652	.0681	.8466	26
35	0.35157	0.93616	0.37554	2.6628	1.0682	2.8444	25
36	.35184	.93606	.37587	.6604	.0683	.8422	24
37	.35211	.93596	.37621	.6581	.0684	.8400	23
38	.35239	.93585	.37654	.6558	.0685	.8378	22
39	.35266	.93575	.37687	.6534	.0686	.8356	21
40	0.35293	0.93565	0.37720	2.6511	1.0688	2.8334	20
41	.35320	.93555	.37754	.6487	.0689	.8312	19
42	.35347	.93544	.37787	.6464	.0690	.8290	18
43	.35375	.93534	.37820	.6441	.0691	.8269	17
44	.35402	.93524	.37853	.6418	.0692	.8247	16
45	0.35429	0.93513	0.37887	2.6394	1.0694	2.8225	15
46	.35456	.93503	.37920	.6371	.0695	.8204	14
47	.35483	.93493	.37953	.6348	.0696	.8182	13
48	.35511	.93482	.37986	.6325	.0697	.8160	12
49	.35538	.93472	.38020	.6302	.0698	.8139	11
50	0.35565	0.93462	0.38053	2.6279	1.0699	2.8117	10
51	.35592	.93451	.38086	.6256	.0701	.8096	9
52	.35619	.93441	.38120	.6233	.0702	.8074	8
53	.35647	.93431	.38153	.6210	.0703	.8053	7
54	.35674	.93420	.38186	.6187	.0704	.8032	6
55	0.35701	0.93410	0.38220	2.6164	1.0705	2.8010	5
56	.35728	.93400	.38253	.6142	.0707	.7989	4
57	.35755	.93389	.38286	.6119	.0708	.7968	3
58	.35782	.93379	.38320	.6096	.0709	.7947	2
59	.35810	.93368	.38353	.6073	.0710	.7925	1
60	0.35837	0.93358	0.38386	2.6051	1.0711	2.7904	0
M	Cosine	Sine	Cotan.	Tan.	Cosec.	Secant	M

69°

21°

M	Sine	Cosine	Tan.	Cotan.	Secant	Cosec.	M
0	0.35837	0.93358	0.38386	2.6051	1.0711	2.7904	60
1	.35864	.93348	.38420	.6028	.0713	.7883	59
2	.35891	.93337	.38453	.6006	.0714	.7862	58
3	.35918	.93327	.38486	.5983	.0715	.7841	57
4	.35945	.93316	.38520	.5960	.0716	.7820	56
5	0.35972	0.93306	0.38553	2.5938	1.0717	2.7799	55
6	.36000	.93295	.38587	.5916	.0719	.7778	54
7	.36027	.93285	.38620	.5893	.0720	.7757	53
8	.36054	.93274	.38654	.5871	.0721	.7736	52
9	.36081	.93264	.38687	.5848	.0722	.7715	51
10	0.36108	0.93253	0.38720	2.5826	1.0723	2.7694	50
11	.36135	.93243	.38754	.5804	.0725	.7674	49
12	.36162	.93232	.38787	.5781	.0726	.7653	48
13	.36189	.93222	.38821	.5759	.0727	.7632	47
14	.36217	.93211	.38854	.5737	.0728	.7611	46
15	0.36244	0.93201	0.38888	2.5715	1.0729	2.7591	45
16	.36271	.93190	.38921	.5693	.0731	.7570	44
17	.36298	.93180	.38955	.5671	.0732	.7550	43
18	.36325	.93169	.38988	.5649	.0733	.7529	42
19	.36352	.93158	.39022	.5627	.0734	.7509	41
20	0.36379	0.93148	0.39055	2.5605	1.0736	2.7488	40
21	.36406	.93137	.39089	.5583	.0737	.7468	39
22	.36433	.93127	.39122	.5561	.0738	.7447	38
23	.36460	.93116	.39156	.5539	.0739	.7427	37
24	.36488	.93105	.39189	.5517	.0740	.7406	36
25	0.36515	0.93095	0.39223	2.5495	1.0742	2.7386	35
26	.36542	.93084	.39257	.5473	.0743	.7366	34
27	.36569	.93074	.39290	.5451	.0744	.7346	33
28	.36596	.93063	.39324	.5430	.0745	.7325	32
29	.36623	.93052	.39357	.5408	.0747	.7305	31
30	0.36650	0.93042	0.39391	2.5386	1.0748	2.7285	30
31	.36677	.93031	.39425	.5365	.0749	.7265	29
32	.36704	.93020	.39458	.5343	.0750	.7245	28
33	.36731	.93010	.39492	.5322	.0751	.7225	27
34	.36753	.92999	.39525	.5300	.0753	.7205	26
35	0.36785	0.92988	0.39559	2.5278	1.0754	2.7185	25
36	.36812	.92978	.39593	.5257	.0755	.7165	24
37	.36839	.92967	.39626	.5236	.0756	.7145	23
38	.36866	.92956	.39660	.5214	.0758	.7125	22
39	.36893	.92945	.39694	.5193	.0759	.7105	21
40	0.36921	0.92935	0.39727	2.5171	1.0760	2.7085	20
41	.36948	.92924	.39761	.5150	.0761	.7065	19
42	.36975	.92913	.39795	.5129	.0763	.7045	18
43	.37002	.92902	.39828	.5108	.0764	.7026	17
44	.37029	.92892	.39862	.5086	.0765	.7006	16
45	0.37056	0.92881	0.39896	2.5065	1.0766	2.6986	15
46	.37083	.92870	.39930	.5044	.0768	.6967	14
47	.37110	.92859	.39961	.5023	.0769	.6947	13
48	.37137	.92848	.39997	.5002	.0770	.6927	12
49	.37164	.92838	.40031	.4981	.0771	.6908	11
50	0.37191	0.92827	0.40065	2.4960	1.0773	2.6888	10
51	.37218	.92816	.40098	.4939	.0774	.6869	9
52	.37245	.92805	.40132	.4918	.0775	.6849	8
53	.37272	.92791	.40166	.4897	.0776	.6830	7
54	.37299	.92784	.40200	.4876	.0778	.6810	6
55	0.37326	0.92773	0.40233	2.4855	1.0779	2.6791	5
56	.37353	.92762	.40267	.4834	.0780	.6772	4
57	.37380	.92751	.40301	.4813	.0781	.6752	3
58	.37407	.92740	.40335	.4792	.0783	.6733	2
59	.37434	.92729	.40369	.4772	.0784	.6714	1
60	0.37461	0.92718	0.40403	2.4751	1.0785	2.6695	0
M	Cosine	Sine	Cotan.	Tan.	Cosec.	Secant	M

68°

22°

M	Sine	Cosine	Tan.	Cotan.	Secant	Cosec.	M
0	0.37461	0.92718	0.40403	2.4751	1.0785	2.6695	60
1	.37488	.92707	.40436	.4730	.0787	.6675	59
2	.37514	.92696	.40470	.4709	.0788	.6656	58
3	.37541	.92686	.40504	.4689	.0789	.6637	57
4	.37568	.92675	.40538	.4668	.0790	.6618	56
5	0.37595	0.92664	0.40572	2.4647	1.0792	2.6599	55
6	.37622	.92653	.40606	.4627	.0793	.6580	54
7	.37649	.92642	.40640	.4606	.0794	.6561	53
8	.37676	.92631	.40673	.4586	.0795	.6542	52
9	.37703	.92620	.40707	.4565	.0797	.6523	51
10	0.37730	0.92609	0.40741	2.4545	1.0798	2.6504	50
11	.37757	.92598	.40775	.4525	.0799	.6485	49
12	.37784	.92587	.40809	.4504	.0801	.6466	48
13	.37811	.92576	.40843	.4484	.0802	.6447	47
14	.37838	.92565	.40877	.4463	.0803	.6428	46
15	0.37865	0.92554	0.40911	2.4443	1.0804	2.6410	45
16	.37892	.92543	.40945	.4423	.0806	.6391	44
17	.37919	.92532	.40979	.4403	.0807	.6372	43
18	.37946	.92521	.41013	.4382	.0808	.6353	42
19	.37972	.92510	.41047	.4362	.0810	.6335	41
20	0.37999	0.92499	0.41081	2.4342	1.0811	2.6316	40
21	.38026	.92488	.41115	.4322	.0812	.6297	39
22	.38053	.92477	.41149	.4302	.0813	.6279	38
23	.38080	.92466	.41183	.4282	.0815	.6260	37
24	.38107	.92455	.41217	.4262	.0816	.6242	36
25	0.38134	0.92443	0.41251	2.4242	1.0817	2.6223	35
26	.38161	.92432	.41285	.4222	.0819	.6205	34
27	.38188	.92421	.41319	.4202	.0820	.6186	33
28	.38214	.92410	.41353	.4182	.0821	.6168	32
29	.38241	.92399	.41387	.4162	.0823	.6150	31
30	0.38268	0.92388	0.41421	2.4142	1.0824	2.6131	30
31	.38295	.92377	.41455	.4122	.0825	.6113	29
32	.38322	.92366	.41489	.4102	.0826	.6095	28
33	.38349	.92354	.41524	.4083	.0828	.6076	27
34	.38376	.92343	.41558	.4063	.0829	.6058	26
35	0.38403	0.92332	0.41592	2.4043	1.0830	2.6040	25
36	.38429	.92321	.41626	.4023	.0832	.6022	24
37	.38456	.92310	.41660	.4004	.0833	.6003	23
38	.38483	.92299	.41694	.3984	.0834	.5985	22
39	.38510	.92287	.41728	.3964	.0836	.5967	21
40	0.38537	0.92276	0.41762	2.3945	1.0837	2.5949	20
41	.38564	.92265	.41797	.3925	.0838	.5931	19
42	.38591	.92254	.41831	.3906	.0840	.5913	18
43	.38617	.92242	.41865	.3886	.0841	.5895	17
44	.38644	.92231	.41899	.3867	.0842	.5877	16
45	0.38671	0.92220	0.41933	2.3847	1.0844	2.5859	15
46	.38698	.92209	.41968	.3828	.0845	.5841	14
47	.38725	.92197	.42002	.3808	.0846	.5823	13
48	.38751	.92186	.42036	.3789	.0847	.5805	12
49	.38778	.92175	.42070	.3770	.0849	.5787	11
50	0.38805	0.92164	0.42105	2.3750	1.0850	2.5770	10
51	.38832	.92152	.42139	.3731	.0851	.5752	9
52	.38859	.92141	.42173	.3712	.0853	.5734	8
53	.38886	.92130	.42207	.3692	.0854	.5716	7
54	.38912	.92118	.42242	.3673	.0855	.5699	6
55	0.38939	0.92107	0.42276	2.3654	1.0857	2.5681	5
56	.38966	.92096	.42310	.3635	.0858	.5663	4
57	.38993	.92084	.42344	.3616	.0859	.5646	3
58	.39019	.92073	.42379	.3597	.0861	.5628	2
59	.39046	.92062	.42413	.3577	.0862	.5610	1
60	0.39073	0.92050	0.42447	2.3558	1.0864	2.5593	0
M	Cosine	Sine	Cotan.	Tan.	Cosec.	Secant	M

67°

23°

M	Sine	Cosine	Tan.	Cotan.	Secant	Cosec.	M
0	0.39073	0.92050	0.42447	2.3558	1.0864	2.5593	60
1	.39100	.92039	.42482	.3539	.0865	.5575	59
2	.39126	.92028	.42516	.3520	.0866	.5558	58
3	.39153	.92016	.42550	.3501	.0868	.5540	57
4	.39180	.92005	.42585	.3482	.0869	.5523	56
5	0.39207	0.91993	0.42619	2.3463	1.0870	2.5506	55
6	.39234	.91982	.42654	.3445	.0872	.5488	54
7	.39260	.91971	.42688	.3426	.0873	.5471	53
8	.39287	.91959	.42722	.3407	.0874	.5453	52
9	.39314	.91948	.42757	.3388	.0876	.5436	51
10	0.39341	0.91936	0.42791	2.3369	1.0877	2.5419	50
11	.39367	.91925	.42826	.3350	.0878	.5402	49
12	.39394	.91913	.42860	.3332	.0880	.5384	48
13	.39421	.91902	.42894	.3313	.0881	.5367	47
14	.39448	.91891	.42929	.3294	.0882	.5350	46
15	0.39474	0.91879	0.42963	2.3276	1.0884	2.5333	45
16	.39501	.91868	.42998	.3257	.0885	.5316	44
17	.39528	.91856	.43032	.3238	.0886	.5299	43
18	.39554	.91845	.43067	.3220	.0888	.5281	42
19	.39581	.91833	.43101	.3201	.0889	.5264	41
20	0.39608	0.91822	0.43136	2.3183	1.0891	2.5247	40
21	.39635	.91810	.43170	.3164	.0892	.5230	39
22	.39661	.91798	.43205	.3145	.0893	.5213	38
23	.39688	.91787	.43239	.3127	.0895	.5196	37
24	.39715	.91775	.43274	.3109	.0896	.5179	36
25	0.39741	0.91764	0.43308	2.3090	1.0897	2.5163	35
26	.39768	.91752	.43343	.3072	.0899	.5146	34
27	.39795	.91741	.43377	.3053	.0900	.5129	33
28	.39821	.91729	.43412	.3035	.0902	.5112	32
29	.39848	.91718	.43447	.3017	.0903	.5095	31
30	0.39875	0.91706	0.43481	2.2998	1.0904	2.5078	30
31	.39901	.91694	.43516	.2980	.0906	.5062	29
32	.39928	.91683	.43550	.2962	.0907	.5045	28
33	.39955	.91671	.43585	.2944	.0908	.5028	27
34	.39981	.91659	.43620	.2925	.0910	.5011	26
35	0.40008	0.91648	0.43654	2.2907	1.0911	2.4995	25
36	.40035	.91636	.43689	.2889	.0913	.4978	24
37	.40061	.91625	.43723	.2871	.0914	.4961	23
38	.40088	.91613	.43758	.2853	.0915	.4945	22
39	.40115	.91601	.43793	.2835	.0917	.4928	21
40	0.40141	0.91590	0.43827	2.2817	1.0918	2.4912	20
41	.40168	.91578	.43862	.2799	.0920	.4895	19
42	.40195	.91566	.43897	.2781	.0921	.4879	18
43	.40221	.91554	.43932	.2763	.0922	.4862	17
44	.40248	.91543	.43966	.2745	.0924	.4846	16
45	0.40275	0.91531	0.44001	2.2727	1.0925	2.4829	15
46	.40301	.91519	.44036	.2709	.0927	.4813	14
47	.40328	.91508	.44070	.2691	.0928	.4797	13
48	.40354	.91496	.44105	.2673	.0929	.4780	12
49	.40381	.91484	.44140	.2655	.0931	.4764	11
50	0.40408	0.91472	0.44175	2.2637	1.0932	2.4748	10
51	.40434	.91461	.44209	.2619	.0934	.4731	9
52	.40461	.91449	.44244	.2602	.0935	.4715	8
53	.40487	.91437	.44279	.2584	.0936	.4699	7
54	.40514	.91425	.44314	.2566	.0938	.4683	6
55	0.40541	0.91414	0.44349	2.2548	1.0939	2.4666	5
56	.40567	.91402	.44383	.2531	.0941	.4650	4
57	.40594	.91390	.44418	.2513	.0942	.4634	3
58	.40620	.91378	.44453	.2495	.0943	.4618	2
59	.40647	.91366	.44488	.2478	.0945	.4602	1
60	0.40674	0.91354	0.44523	2.2460	1.0946	2.4586	0
M	Cosine	Sine	Cotan.	Tan.	Cosec.	Secant	M

66°

TABLES OF NATURAL TRIGONOMETRIC FUNCTIONS

0°

M	Sine	Cosine	Tan.	Cotan.	Secant	Cosec.	M
0	0.00000	1.0000	0.00000	Infinite	1.0000	Infinite	60
1	.00029	.0000	.00029	3437.7	.0000	3437.7	59
2	.00058	.0000	.00058	1718.9	.0000	1718.9	58
3	.00087	.0000	.00087	1145.9	.0000	1145.9	57
4	.00116	.0000	.00116	859.44	.0000	859.44	56
5	0.00145	1.0000	0.00145	687.55	1.0000	687.55	55
6	.00174	.0000	.00174	572.96	.0000	572.96	54
7	.00204	.0000	.00204	491.11	.0000	491.11	53
8	.00233	.0000	.00233	429.72	.0000	429.72	52
9	.00262	.0000	.00262	381.97	.0000	381.97	51
10	0.00291	0.99999	0.00291	343.77	1.0000	343.77	50
11	.00320	.99999	.00320	312.52	.0000	312.52	49
12	.00349	.99999	.00349	286.48	.0000	286.48	48
13	.00378	.99999	.00378	264.44	.0000	264.44	47
14	.00407	.99999	.00407	245.55	.0000	245.55	46
15	0.00436	0.99999	0.00436	229.18	1.0000	229.18	45
16	.00465	.99999	.00465	214.86	.0000	214.86	44
17	.00494	.99999	.00494	202.22	.0000	202.22	43
18	.00524	.99999	.00524	190.98	.0000	190.99	42
19	.00553	.99998	.00553	180.93	.0000	180.93	41
20	0.00582	0.99998	0.00582	171.88	1.0000	171.89	40
21	.00611	.99998	.00611	163.70	.0000	163.70	39
22	.00640	.99998	.00640	156.26	.0000	156.26	38
23	.00669	.99998	.00669	149.46	.0000	149.47	37
24	.00698	.99997	.00698	143.24	.0000	143.24	36
25	0.00727	0.99997	0.00727	137.51	1.0000	137.51	35
26	.00756	.99997	.00756	132.22	.0000	132.22	34
27	.00785	.99997	.00785	127.32	.0000	127.32	33
28	.00814	.99997	.00814	122.77	.0000	122.78	32
29	.00843	.99996	.00844	118.54	.0000	118.54	31
30	0.00873	0.99996	0.00873	114.59	1.0000	114.59	30
31	.00902	.99996	.00902	110.89	.0000	110.90	29
32	.00931	.99996	.00931	107.43	.0000	107.43	28
33	.00960	.99995	.00960	104.17	.0000	104.17	27
34	.00989	.99995	.00989	101.11	.0000	101.11	26
35	0.01018	0.99995	0.01018	98.218	1.0000	98.223	25
36	.01047	.99994	.01047	95.489	.0000	95.495	24
37	.01076	.99991	.01076	92.908	.0000	92.914	23
38	.01105	.99991	.01105	90.463	.0001	90.469	22
39	.01134	.99993	.01134	88.143	.0001	88.149	21
40	0.01163	0.99993	0.01164	85.940	1.0001	85.946	20
41	.01193	.99993	.01193	83.843	.0001	83.849	19
42	.01222	.99992	.01222	81.847	.0001	81.853	18
43	.01251	.99992	.01251	79.943	.0001	79.950	17
44	.01280	.99992	.01280	78.126	.0001	78.133	16
45	0.01309	0.99991	0.01309	76.390	1.0001	76.396	15
46	.01338	.99991	.01338	74.729	.0001	74.736	14
47	.01367	.99991	.01367	73.139	.0001	73.146	13
48	.01396	.99990	.01396	71.615	.0001	71.622	12
49	.01425	.99990	.01425	70.153	.0001	70.160	11
50	0.01454	0.99989	0.01454	68.750	1.0001	68.757	10
51	.01483	.99989	.01484	67.402	.0001	67.409	9
52	.01512	.99988	.01513	66.105	.0001	66.113	8
53	.01542	.99988	.01542	64.858	.0001	64.865	7
54	.01571	.99988	.01571	63.657	.0001	63.664	6
55	0.01600	0.99987	0.01600	62.499	1.0001	62.507	5
56	.01629	.99987	.01629	61.383	.0001	61.391	4
57	.01658	.99987	.01658	60.306	.0001	60.314	3
58	.01687	.99986	.01687	59.265	.0001	59.274	2
59	.01716	.99985	.01716	58.261	.0001	58.270	1
60	0.01745	0.99985	0.01745	57.290	1.0001	57.299	0
M	Cosine	Sine	Cotan.	Tan.	Cosec.	Secant	M

89°

1°

M	Sine	Cosine	Tan.	Cotan.	Secant	Cosec.	M
0	0.01745	0.99985	0.01745	57.290	1.0001	57.299	60
1	.01774	.99984	.01775	56.350	.0001	56.359	59
2	.01803	.99984	.01804	55.441	.0001	55.450	58
3	.01832	.99983	.01833	54.561	.0002	54.570	57
4	.01861	.99983	.01862	53.708	.0002	53.718	56
5	0.01891	0.99982	0.01891	52.882	1.0002	52.891	55
6	.01920	.99981	.01920	52.081	.0002	52.090	54
7	.01949	.99981	.01949	51.303	.0002	51.313	53
8	.01978	.99980	.01978	50.548	.0002	50.553	52
9	.02007	.99980	.02007	49.816	.0002	49.826	51
10	0.02036	0.99979	0.02036	49.104	1.0002	49.114	50
11	.02065	.99979	.02066	48.412	.0002	48.422	49
12	.02094	.99978	.02095	47.739	.0002	47.750	48
13	.02123	.99977	.02124	47.085	.0002	47.096	47
14	.02152	.99977	.02153	46.449	.0002	46.460	46
15	0.02181	0.99976	0.02182	45.829	1.0002	45.840	45
16	.02210	.99975	.02211	45.226	.0002	45.237	44
17	.02240	.99975	.02240	44.639	.0002	44.650	43
18	.02269	.99974	.02269	44.066	.0002	44.077	42
19	.02298	.99974	.02298	43.508	.0003	43.520	41
20	0.02326	0.99973	0.02327	42.964	1.0003	42.976	40
21	.02356	.99972	.02357	42.433	.0003	42.445	39
22	.02385	.99971	.02386	41.916	.0003	41.928	38
23	.02414	.99971	.02415	41.410	.0003	41.423	37
24	.02443	.99970	.02444	40.917	.0003	40.930	36
25	0.02472	0.99969	0.02473	40.436	1.0003	40.448	35
26	.02501	.99969	.02502	39.965	.0003	39.978	34
27	.02530	.99968	.02531	39.506	.0003	39.518	33
28	.02559	.99967	.02560	39.057	.0003	39.069	32
29	.02589	.99966	.02589	38.618	.0003	38.631	31
30	0.02618	0.99966	0.02618	38.188	1.0003	38.201	30
31	.02647	.99965	.02648	37.769	.0003	37.782	29
32	.02676	.99964	.02677	37.358	.0003	37.371	28
33	.02705	.99963	.02706	36.956	.0004	36.969	27
34	.02734	.99963	.02735	36.563	.0004	36.576	26
35	0.02763	0.99962	0.02764	36.177	1.0004	36.191	25
36	.02792	.99961	.02793	35.800	.0004	35.814	24
37	.02821	.99960	.02822	35.431	.0004	35.445	23
38	.02850	.99959	.02851	35.069	.0004	35.084	22
39	.02879	.99958	.02880	34.715	.0004	34.729	21
40	0.02908	0.99958	0.02910	34.368	1.0004	34.382	20
41	.02937	.99957	.02939	34.027	.0004	34.042	19
42	.02967	.99956	.02968	33.693	.0004	33.708	18
43	.02996	.99955	.02997	33.366	.0004	33.381	17
44	.03025	.99954	.03026	33.045	.0004	33.060	16
45	0.03054	0.99953	0.03055	32.730	1.0005	32.745	15
46	.03083	.99952	.03084	32.421	.0005	32.437	14
47	.03112	.99951	.03113	32.118	.0005	32.134	13
48	.03141	.99951	.03143	31.820	.0005	31.836	12
49	.03170	.99950	.03172	31.528	.0005	31.544	11
50	0.03199	0.99949	0.03201	31.241	1.0005	31.257	10
51	.03228	.99948	.03230	30.960	.0005	30.976	9
52	.03257	.99947	.03259	30.683	.0005	30.699	8
53	.03286	.99946	.03288	30.411	.0005	30.428	7
54	.03315	.99945	.03317	30.145	.0005	30.161	6
55	0.03344	0.99944	0.03346	29.882	1.0005	29.899	5
56	.03374	.99943	.03375	29.624	.0006	29.641	4
57	.03403	.99942	.03405	29.371	.0006	29.388	3
58	.03432	.99941	.03434	29.122	.0006	29.139	2
59	.03461	.99940	.03463	28.877	.0006	28.894	1
60	0.03490	0.99939	0.03492	28.636	1.0006	28.654	0
M	Cosine	Sine	Cotan.	Tan.	Cosec.	Secant	M

88°

2°

M	Sine	Cosine	Tan.	Cotan.	Secant	Cosec.	M
0	0.03490	0.99939	0.03492	28.636	1.0006	28.654	60
1	.03519	.99938	.03521	28.399	.0006	28.417	59
2	.03548	.99937	.03550	28.166	.0006	28.184	58
3	.03577	.99936	.03579	27.937	.0006	27.955	57
4	.03606	.99935	.03608	27.712	.0006	27.730	56
5	0.03635	0.99934	0.03638	27.490	1.0007	27.508	55
6	.03664	.99933	.03667	27.271	.0007	27.290	54
7	.03693	.99932	.03696	27.056	.0007	27.075	53
8	.03722	.99931	.03725	26.845	.0007	26.864	52
9	.03751	.99930	.03754	26.637	.0007	26.655	51
10	0.03781	0.99928	0.03783	26.432	1.0007	26.450	50
11	.03810	.99927	.03812	26.230	.0007	26.249	49
12	.03839	.99926	.03842	26.031	.0007	26.050	48
13	.03868	.99925	.03871	25.835	.0007	25.854	47
14	.03897	.99924	.03900	25.642	.0008	25.661	46
15	0.03926	0.99923	0.03929	25.452	1.0008	25.471	45
16	.03955	.99922	.03958	25.264	.0008	25.284	44
17	.03984	.99921	.03987	25.080	.0008	25.100	43
18	.04013	.99919	.04016	24.898	.0008	24.918	42
19	.04042	.99918	.04045	24.718	.0008	24.739	41
20	0.04071	0.99917	0.04075	24.542	1.0008	24.562	40
21	.04100	.99916	.04104	24.367	.0008	24.388	39
22	.04129	.99915	.04133	24.196	.0008	24.216	38
23	.04158	.99913	.04162	24.026	.0009	24.047	37
24	.04187	.99912	.04191	23.859	.0009	23.880	36
25	0.04217	0.99911	0.04220	23.694	1.0009	23.716	35
26	.04246	.99910	.04249	23.532	.0009	23.553	34
27	.04275	.99908	.04279	23.372	.0009	23.393	33
28	.04304	.99907	.04308	23.214	.0009	23.235	32
29	.04333	.99906	.04337	23.058	.0009	23.079	31
30	0.04362	0.99905	0.04366	22.904	1.0009	22.925	30
31	.04391	.99903	.04395	22.752	.0010	22.774	29
32	.04420	.99902	.04424	22.602	.0010	22.624	28
33	.04449	.99901	.04453	22.454	.0010	22.476	27
34	.04478	.99900	.04483	22.308	.0010	22.330	26
35	0.04507	0.99898	0.04512	22.164	1.0010	22.186	25
36	.04536	.99897	.04541	22.022	.0010	22.044	24
37	.04565	.99896	.04570	21.881	.0010	21.904	23
38	.04594	.99894	.04599	21.742	.0010	21.765	22
39	.04623	.99893	.04628	21.606	.0011	21.629	21
40	0.04652	0.99892	0.04657	21.470	1.0011	21.491	20
41	.04681	.99890	.04687	21.337	.0011	21.360	19
42	.04711	.99889	.04716	21.205	.0011	21.228	18
43	.04740	.99888	.04745	21.075	.0011	21.098	17
44	.04769	.99886	.04774	20.946	.0011	20.970	16
45	0.04798	0.99885	0.04803	20.819	1.0011	20.843	15
46	.04827	.99883	.04832	20.693	.0012	20.717	14
47	.04856	.99882	.04862	20.569	.0012	20.593	13
48	.04885	.99881	.04891	20.446	.0012	20.471	12
49	.04914	.99879	.04920	20.325	.0012	20.350	11
50	0.04943	0.99878	0.04949	20.205	1.0012	20.230	10
51	.04972	.99876	.04978	20.087	.0012	20.112	9
52	.05001	.99875	.05007	19.970	.0012	19.995	8
53	.05030	.99873	.05037	19.854	.0013	19.880	7
54	.05059	.99872	.05066	19.740	.0013	19.766	6
55	0.05088	0.99870	0.05095	19.627	1.0013	19.653	5
56	.05117	.99869	.05124	19.515	.0013	19.541	4
57	.05146	.99867	.05153	19.405	.0013	19.431	3
58	.05175	.99866	.05182	19.296	.0013	19.322	2
59	.05204	.99864	.05212	19.188	.0013	19.214	1
60	0.05234	0.99863	0.05241	19.081	1.0014	19.107	0
M	Cosine	Sine	Cotan.	Tan.	Cosec.	Secant	M

87°

3°

M	Sine	Cosine	Tan.	Cotan.	Secant	Cosec.	M
0	0.05234	0.99863	0.05241	19.081	1.0014	19.107	60
1	.05263	.99861	.05270	18.975	.0014	19.002	59
2	.05292	.99860	.05299	18.871	.0014	18.897	58
3	.05321	.99858	.05328	18.768	.0014	18.794	57
4	.05350	.99857	.05357	18.665	.0014	18.692	56
5	0.05379	0.99855	0.05387	18.564	1.0014	18.591	55
6	.05408	.99854	.05416	18.464	.0015	18.491	54
7	.05437	.99852	.05445	18.365	.0015	18.393	53
8	.05466	.99850	.05474	18.268	.0015	18.295	52
9	.05495	.99849	.05503	18.171	.0015	18.198	51
10	0.05524	0.99847	0.05532	18.075	1.0015	18.103	50
11	.05553	.99846	.05562	17.980	.0015	18.008	49
12	.05582	.99844	.05591	17.886	.0016	17.914	48
13	.05611	.99842	.05620	17.793	.0016	17.821	47
14	.05640	.99841	.05649	17.701	.0016	17.730	46
15	0.05669	0.99839	0.05678	17.610	1.0016	17.639	45
16	.05698	.99837	.05707	17.520	.0016	17.549	44
17	.05727	.99836	.05737	17.431	.0016	17.460	43
18	.05756	.99834	.05766	17.343	.0017	17.372	42
19	.05785	.99832	.05795	17.256	.0017	17.285	41
20	0.05814	0.99831	0.05825	17.169	1.0017	17.198	40
21	.05843	.99829	.05853	17.084	.0017	17.113	39
22	.05872	.99827	.05883	16.999	.0017	17.028	38
23	.05902	.99826	.05912	16.915	.0017	16.944	37
24	.05931	.99824	.05941	16.832	.0018	16.861	36
25	0.05960	0.99822	0.05970	16.750	1.0018	16.779	35
26	.05989	.99820	.05999	16.668	.0018	16.698	34
27	.06018	.99819	.06029	16.587	.0018	16.617	33
28	.06047	.99817	.06058	16.507	.0018	16.538	32
29	.06076	.99815	.06087	16.428	.0018	16.459	31
30	0.06105	0.99813	0.06116	16.350	1.0019	16.380	30
31	.06134	.99812	.06145	16.272	.0019	16.303	29
32	.06163	.99810	.06175	16.195	.0019	16.226	28
33	.06192	.99808	.06204	16.119	.0019	16.150	27
34	.06221	.99806	.06233	16.043	.0019	16.075	26
35	0.06250	0.99804	0.06262	15.969	1.0019	16.000	25
36	.06279	.99803	.06291	15.894	.0020	15.926	24
37	.06308	.99801	.06321	15.821	.0020	15.853	23
38	.06337	.99799	.06350	15.748	.0020	15.780	22
39	.06366	.99797	.06379	15.676	.0020	15.708	21
40	0.06395	0.99795	0.06408	15.605	1.0020	15.637	20
41	.06424	.99793	.06437	15.534	.0021	15.566	19
42	.06453	.99791	.06467	15.464	.0021	15.496	18
43	.06482	.99790	.06496	15.394	.0021	15.427	17
44	.06511	.99788	.06525	15.325	.0021	15.358	16
45	0.06540	0.99786	0.06554	15.257	1.0021	15.290	15
46	.06569	.99784	.06583	15.189	.0022	15.222	14
47	.06598	.99782	.06613	15.122	.0022	15.155	13
48	.06627	.99780	.06642	15.056	.0022	15.089	12
49	.06656	.99778	.06671	14.990	.0022	15.023	11
50	0.06685	0.99776	0.06700	14.924	1.0022	14.958	10
51	.06714	.99774	.06730	14.860	.0023	14.893	9
52	.06743	.99772	.06759	14.795	.0023	14.829	8
53	.06772	.99770	.06788	14.732	.0023	14.765	7
54	.06801	.99768	.06817	14.668	.0023	14.702	6
55	0.06830	0.99766	0.06846	14.606	1.0023	14.640	5
56	.06859	.99764	.06876	14.544	.0024	14.578	4
57	.06888	.99762	.06905	14.482	.0024	14.517	3
58	.06918	.99760	.06934	14.421	.0024	14.456	2
59	.06947	.99758	.06963	14.361	.0024	14.395	1
60	0.06976	0.99756	0.06993	14.301	1.0024	14.335	0
M	Cosine	Sine	Cotan.	Tan.	Cosec.	Secant	M

86°

4°

M	Sine	Cosine	Tan.	Cotan.	Secant	Cosec.	M
0	0.06976	0.99756	0.06993	14.301	1.0024	14.335	60
1	.07005	.99754	.07022	14.241	.0025	14.276	59
2	.07034	.99752	.07051	14.182	.0025	14.217	58
3	.07063	.99750	.07080	14.123	.0025	14.159	57
4	.07092	.99748	.07110	14.065	.0025	14.101	56
5	0.07121	0.99746	0.07139	14.008	1.0025	14.043	55
6	.07150	.99744	.07168	13.951	.0026	13.986	54
7	.07179	.99742	.07197	13.894	.0026	13.930	53
8	.07208	.99740	.07226	13.838	.0026	13.874	52
9	.07237	.99738	.07256	13.782	.0026	13.818	51
10	0.07266	0.99736	0.07285	13.727	1.0026	13.763	50
11	.07295	.99733	.07314	13.672	.0027	13.708	49
12	.07324	.99731	.07343	13.617	.0027	13.654	48
13	.07353	.99729	.07373	13.563	.0027	13.600	47
14	.07382	.99727	.07402	13.510	.0027	13.547	46
15	0.07411	0.99725	0.07431	13.457	1.0027	13.494	45
16	.07440	.99723	.07460	13.404	.0028	13.441	44
17	.07469	.99721	.07490	13.351	.0028	13.389	43
18	.07498	.99718	.07519	13.299	.0028	13.337	42
19	.07527	.99716	.07548	13.248	.0028	13.286	41
20	0.07556	0.99714	0.07577	13.197	1.0029	13.235	40
21	.07585	.99712	.07607	13.146	.0029	13.184	39
22	.07614	.99710	.07636	13.096	.0029	13.134	38
23	.07643	.99707	.07665	13.046	.0029	13.084	37
24	.07672	.99705	.07694	12.996	.0029	13.034	36
25	0.07701	0.99703	0.07724	12.947	1.0030	12.985	35
26	.07730	.99701	.07753	12.898	.0030	12.937	34
27	.07759	.99698	.07782	12.849	.0030	12.888	33
28	.07788	.99696	.07812	12.801	.0030	12.840	32
29	.07817	.99694	.07841	12.754	.0031	12.793	31
30	0.07846	0.99692	0.07870	12.706	1.0031	12.745	30
31	.07875	.99689	.07899	12.659	.0031	12.698	29
32	.07904	.99687	.07929	12.612	.0031	12.652	28
33	.07933	.99685	.07958	12.566	.0032	12.606	27
34	.07962	.99682	.07987	12.520	.0032	12.560	26
35	0.07991	0.99680	0.08016	12.474	1.0032	12.514	25
36	.08020	.99678	.08046	12.429	.0032	12.469	24
37	.08049	.99675	.08075	12.384	.0032	12.424	23
38	.08078	.99673	.08104	12.339	.0033	12.379	22
39	.08107	.99671	.08134	12.295	.0033	12.335	21
40	0.08136	0.99668	0.08163	12.250	1.0033	12.291	20
41	.08165	.99666	.08192	12.207	.0033	12.248	19
42	.08194	.99664	.08221	12.163	.0034	12.204	18
43	.08223	.99661	.08251	12.120	.0034	12.161	17
44	.08252	.99659	.08280	12.077	.0034	12.118	16
45	0.08281	0.99657	0.08309	12.035	1.0034	12.076	15
46	.08310	.99654	.08339	11.992	.0035	12.034	14
47	.08339	.99652	.08368	11.950	.0035	11.992	13
48	.08368	.99649	.08397	11.909	.0035	11.950	12
49	.08397	.99647	.08426	11.867	.0035	11.909	11
50	0.08426	0.99644	0.08456	11.826	1.0036	11.868	10
51	.08455	.99642	.08485	11.785	.0036	11.828	9
52	.08484	.99639	.08514	11.745	.0036	11.787	8
53	.08513	.99637	.08544	11.704	.0036	11.747	7
54	.08542	.99634	.08573	11.664	.0037	11.707	6
55	0.08571	0.99632	0.08602	11.625	1.0037	11.668	5
56	.08600	.99629	.08632	11.585	.0037	11.628	4
57	.08629	.99627	.08661	11.546	.0037	11.589	3
58	.08658	.99624	.08690	11.507	.0038	11.550	2
59	.08687	.99622	.08719	11.468	.0038	11.512	1
60	0.08715	0.99619	0.08749	11.430	1.0038	11.474	0
M	Cosine	Sine	Cotan.	Tan.	Cosec.	Secant	M

85°

5°

M	Sine	Cosine	Tan.	Cotan.	Secant	Cosec.	M
0	0.08715	0.99619	0.08749	11.430	1.0038	11.474	60
1	.08744	.99617	.08778	11.392	.0038	11.436	59
2	.08773	.99614	.08807	11.354	.0039	11.398	58
3	.08802	.99612	.08837	11.316	.0039	11.360	57
4	.08831	.99609	.08866	11.279	.0039	11.323	56
5	0.08860	0.99607	0.08895	11.242	1.0039	11.286	55
6	.08889	.99604	.08925	11.205	.0040	11.249	54
7	.08918	.99601	.08954	11.168	.0040	11.213	53
8	.08947	.99599	.08983	11.132	.0040	11.176	52
9	.08976	.99596	.09013	11.095	.0040	11.140	51
10	0.09005	0.99594	0.09042	11.059	1.0041	11.104	50
11	.09034	.99591	.09071	11.024	.0041	11.069	49
12	.09063	.99588	.09101	10.988	.0041	11.033	48
13	.09092	.99586	.09130	10.953	.0041	10.998	47
14	.09121	.99583	.09159	10.918	.0042	10.963	46
15	0.09150	0.99580	0.09189	10.883	1.0042	10.929	45
16	.09179	.99578	.09218	10.848	.0042	10.894	44
17	.09208	.99575	.09247	10.814	.0043	10.860	43
18	.09237	.99572	.09277	10.780	.0043	10.826	42
19	.09266	.99570	.09306	10.746	.0043	10.792	41
20	0.09295	0.99567	0.09335	10.712	1.0043	10.758	40
21	.09324	.99564	.09365	10.678	.0044	10.725	39
22	.09353	.99562	.09394	10.645	.0044	10.692	38
23	.09382	.99559	.09423	10.612	.0044	10.659	37
24	.09411	.99556	.09453	10.579	.0044	10.626	36
25	0.09440	0.99553	0.09482	10.546	1.0045	10.593	35
26	.09469	.99551	.09511	10.514	.0045	10.561	34
27	.09498	.99548	.09541	10.481	.0045	10.529	33
28	.09527	.99545	.09570	10.449	.0046	10.497	32
29	.09556	.99542	.09599	10.417	.0046	10.465	31
30	0.09584	0.99540	0.09629	10.385	1.0046	10.433	30
31	.09613	.99537	.09658	10.354	.0046	10.402	29
32	.09642	.99534	.09688	10.322	.0047	10.371	28
33	.09671	.99531	.09717	10.291	.0047	10.340	27
34	.09700	.99528	.09746	10.260	.0047	10.309	26
35	0.09729	0.99525	0.09776	10.229	1.0048	10.278	25
36	.09758	.99523	.09805	10.199	.0048	10.248	24
37	.09787	.99520	.09834	10.168	.0048	10.217	23
38	.09816	.99517	.09864	10.138	.0048	10.187	22
39	.09845	.99514	.09893	10.108	.0049	10.157	21
40	0.09874	0.99511	0.09922	10.078	1.0049	10.127	20
41	.09903	.99508	.09952	10.048	.0049	10.098	19
42	.09932	.99505	.09981	10.019	.0050	10.068	18
43	.09961	.99503	.10011	9.9893	.0050	10.039	17
44	.09990	.99500	.10040	9.9601	.0050	10.010	16
45	0.10019	0.99497	0.10069	9.9310	1.0050	9.9812	15
46	.10048	.99494	.10099	9.9021	.0051	9.9525	14
47	.10077	.99491	.10128	9.8734	.0051	9.9239	13
48	.10106	.99488	.10158	9.8448	.0051	9.8955	12
49	.10134	.99485	.10187	9.8164	.0052	9.8672	11
50	0.10163	0.99482	0.10216	9.7882	1.0052	9.8391	10
51	.10192	.99479	.10246	9.7601	.0052	9.8112	9
52	.10221	.99476	.10275	9.7322	.0053	9.7834	8
53	.10250	.99473	.10305	9.7044	.0053	9.7558	7
54	.10279	.99470	.10334	9.6768	.0053	9.7283	6
55	0.10308	0.99467	0.10363	9.6493	1.0053	9.7010	5
56	.10337	.99464	.10393	9.6220	.0054	9.6739	4
57	.10366	.99461	.10422	9.5949	.0054	9.6469	3
58	.10395	.99458	.10452	9.5679	.0054	9.6200	2
59	.10424	.99455	.10481	9.5411	.0055	9.5933	1
60	0.10453	0.99452	0.10510	9.5144	1.0055	9.5663	0
M	Cosine	Sine	Cotan.	Tan.	Cosec.	Secant	M

84°

TABLES OF NATURAL TRIGONOMETRIC FUNCTIONS

6°

M	Sine	Cosine	Tan.	Cotan.	Secant	Cosec.	M
0	0.10453	0.99452	0.10510	9.5144	1.0055	9.5668	60
1	.10482	.99449	.10540	.4878	.0055	.5404	59
2	.10511	.99446	.10569	.4614	.0056	.5141	58
3	.10540	.99443	.10599	.4351	.0056	.4880	57
4	.10568	.99440	.10628	.4090	.0056	.4620	56
5	0.10597	0.99437	0.10657	9.3831	1.0057	9.4362	55
6	.10626	.99434	.10687	.3572	.0057	.4105	54
7	.10655	.99431	.10716	.3315	.0057	.3850	53
8	.10684	.99428	.10746	.3060	.0057	.3596	52
9	.10713	.99424	.10775	.2806	.0058	.3343	51
10	0.10742	0.99421	0.10805	9.2553	1.0058	9.3092	50
11	.10771	.99418	.10834	.2302	.0058	.2842	49
12	.10800	.99415	.10863	.2051	.0059	.2593	48
13	.10829	.99412	.10893	.1803	.0059	.2346	47
14	.10858	.99409	.10922	.1555	.0059	.2100	46
15	0.10887	0.99406	0.10952	9.1309	1.0060	9.1855	45
16	.10916	.99402	.10981	.1064	.0060	.1612	44
17	.10944	.99399	.11011	.0821	.0060	.1370	43
18	.10973	.99396	.11040	.0579	.0061	.1129	42
19	.11002	.99393	.11069	.0338	.0061	.0890	41
20	0.11031	0.99390	0.11099	9.0098	1.0061	9.0651	40
21	.11060	.99386	.11128	8.9860	.0062	.0414	39
22	.11089	.99383	.11158	.9623	.0062	.0179	38
23	.11118	.99380	.11187	.9387	.0062	8.9944	37
24	.11147	.99377	.11217	.9152	.0063	.9711	36
25	0.11176	0.99373	0.11246	8.8918	1.0063	8.9479	35
26	.11205	.99370	.11276	.8686	.0063	.9248	34
27	.11234	.99367	.11305	.8455	.0064	.9018	33
28	.11262	.99363	.11335	.8225	.0064	.8790	32
29	.11291	.99360	.11364	.7996	.0064	.8563	31
30	0.11320	0.99357	0.11393	8.7769	1.0065	8.8337	30
31	.11349	.99353	.11423	.7542	.0065	.8112	29
32	.11378	.99350	.11452	.7317	.0065	.7888	28
33	.11407	.99347	.11482	.7093	.0066	.7665	27
34	.11436	.99344	.11511	.6870	.0066	.7444	26
35	0.11465	0.99341	0.11541	8.6648	1.0066	8.7223	25
36	.11494	.99337	.11570	.6427	.0067	.7004	24
37	.11523	.99334	.11600	.6208	.0067	.6786	23
38	.11551	.99330	.11629	.5989	.0067	.6569	22
39	.11580	.99327	.11659	.5772	.0068	.6353	21
40	0.11609	0.99324	0.11688	8.5555	1.0068	8.6138	20
41	.11638	.99320	.11718	.5340	.0068	.5924	19
42	.11667	.99317	.11747	.5126	.0069	.5711	18
43	.11696	.99314	.11777	.4913	.0069	.5499	17
44	.11725	.99310	.11806	.4701	.0069	.5289	16
45	0.11754	0.99307	0.11836	8.4489	1.0070	8.5079	15
46	.11783	.99303	.11865	.4279	.0070	.4871	14
47	.11811	.99300	.11895	.4070	.0070	.4663	13
48	.11840	.99296	.11924	.3862	.0071	.4457	12
49	.11869	.99293	.11954	.3655	.0071	.4251	11
50	0.11898	0.99290	0.11983	8.3449	1.0071	8.4046	10
51	.11927	.99286	.12013	.3244	.0072	.3843	9
52	.11956	.99283	.12042	.3040	.0072	.3640	8
53	.11985	.99279	.12072	.2837	.0073	.3439	7
54	.12014	.99276	.12101	.2635	.0073	.3238	6
55	0.12042	0.99272	0.12131	8.2434	1.0073	8.3039	5
56	.12071	.99269	.12160	.2234	.0074	.2840	4
57	.12100	.99265	.12190	.2035	.0074	.2642	3
58	.12129	.99262	.12219	.1837	.0074	.2446	2
59	.12158	.99258	.12249	.1640	.0075	.2250	1
60	0.12187	0.99255	0.12278	8.1443	1.0075	8.2055	0
M	Cosine	Sine	Cotan.	Tan.	Cosec.	Secant	M

83°

7°

M	Sine	Cosine	Tan.	Cotan.	Secant	Cosec.	M
0	0.12187	0.99255	0.12278	8.1443	1.0075	8.2055	60
1	.12216	.99251	.12308	.1248	.0075	.1861	59
2	.12245	.99247	.12337	.1053	.0076	.1668	58
3	.12273	.99244	.12367	.0860	.0076	.1476	57
4	.12302	.99240	.12396	.0667	.0076	.1285	56
5	0.12331	0.99237	0.12426	8.0476	1.0077	8.1094	55
6	.12360	.99233	.12456	.0285	.0077	.0905	54
7	.12389	.99229	.12485	.0095	.0078	.0717	53
8	.12418	.99226	.12515	7.9906	.0078	.0529	52
9	.12447	.99222	.12544	.9717	.0078	.0342	51
10	0.12476	0.99219	0.12574	7.9530	1.0079	8.0156	50
11	.12504	.99215	.12603	.9344	.0079	7.9971	49
12	.12533	.99211	.12633	.9158	.0079	.9787	48
13	.12562	.99208	.12662	.8973	.0080	.9604	47
14	.12591	.99204	.12692	.8789	.0080	.9421	46
15	0.12620	0.99200	0.12722	7.8606	1.0080	7.9240	45
16	.12649	.99197	.12751	.8424	.0081	.9059	44
17	.12678	.99193	.12781	.8243	.0081	.8879	43
18	.12706	.99189	.12810	.8062	.0082	.8700	42
19	.12735	.99186	.12840	.7882	.0082	.8522	41
20	0.12764	0.99182	0.12869	7.7703	1.0082	7.8344	40
21	.12793	.99178	.12899	.7525	.0083	.8168	39
22	.12822	.99174	.12928	.7348	.0083	.7992	38
23	.12851	.99171	.12958	.7171	.0084	.7817	37
24	.12879	.99167	.12988	.6996	.0084	.7642	36
25	0.12908	0.99163	0.13017	7.6821	1.0084	7.7469	35
26	.12937	.99160	.13047	.6646	.0085	.7296	34
27	.12966	.99156	.13076	.6473	.0085	.7124	33
28	.12995	.99152	.13106	.6300	.0085	.6953	32
29	.13024	.99148	.13136	.6129	.0086	.6783	31
30	0.13053	0.99144	0.13165	7.5957	1.0086	7.6613	30
31	.13081	.99141	.13195	.5787	.0087	.6444	29
32	.13110	.99137	.13224	.5617	.0087	.6276	28
33	.13139	.99133	.13254	.5449	.0087	.6108	27
34	.13168	.99129	.13284	.5280	.0088	.5942	26
35	0.13197	0.99125	0.13313	7.5113	1.0088	7.5776	25
36	.13226	.99122	.13343	.4946	.0089	.5611	24
37	.13254	.99118	.13372	.4780	.0089	.5446	23
38	.13283	.99114	.13402	.4615	.0089	.5282	22
39	.13312	.99110	.13432	.4451	.0090	.5119	21
40	0.13341	0.99106	0.13461	7.4287	1.0090	7.4957	20
41	.13370	.99102	.13491	.4124	.0090	.4795	19
42	.13399	.99098	.13520	.3961	.0091	.4634	18
43	.13427	.99094	.13550	.3800	.0091	.4474	17
44	.13456	.99090	.13580	.3639	.0092	.4315	16
45	0.13485	0.99086	0.13609	7.3479	1.0092	7.4156	15
46	.13514	.99083	.13639	.3319	.0092	.3998	14
47	.13543	.99079	.13669	.3160	.0093	.3840	13
48	.13571	.99075	.13698	.3002	.0093	.3683	12
49	.13600	.99071	.13728	.2844	.0094	.3527	11
50	0.13629	0.99067	0.13757	7.2687	1.0094	7.3372	10
51	.13658	.99063	.13787	.2531	.0094	.3217	9
52	.13687	.99059	.13817	.2375	.0095	.3063	8
53	.13716	.99055	.13846	.2220	.0095	.2909	7
54	.13744	.99051	.13876	.2066	.0096	.2757	6
55	0.13773	0.99047	0.13906	7.1912	1.0096	7.2604	5
56	.13802	.99043	.13935	.1759	.0097	.2453	4
57	.13831	.99039	.13965	.1607	.0097	.2302	3
58	.13860	.99035	.13995	.1455	.0097	.2152	2
59	.13888	.99031	.14024	.1304	.0098	.2002	1
60	0.13917	0.99027	0.14054	7.1154	1.0098	7.1853	0
M	Cosine	Sine	Cotan.	Tan.	Cosec.	Secant	M

82°

8°

M	Sine	Cosine	Tan.	Cotan.	Secant	Cosec.	M
0	0.13917	0.99027	0.14054	7.1154	1.0098	7.1853	60
1	.13946	.99023	.14084	.1004	.0099	.1704	59
2	.13975	.99019	.14113	.0854	.0099	.1557	58
3	.14004	.99015	.14143	.0706	.0099	.1409	57
4	.14032	.99010	.14173	.0558	.0100	.1263	56
5	0.14061	0.99006	0.14202	7.0410	1.0100	7.1117	55
6	.14090	.99002	.14232	.0264	.0101	.0972	54
7	.14119	.98998	.14262	.0117	.0101	.0827	53
8	.14148	.98994	.14291	6.9972	.0102	.0683	52
9	.14176	.98990	.14321	.9827	.0102	.0539	51
10	0.14205	0.98986	0.14351	6.9682	1.0102	7.0396	50
11	.14234	.98982	.14380	.9538	.0103	.0254	49
12	.14263	.98978	.14410	.9395	.0103	.0112	48
13	.14292	.98973	.14440	.9252	.0104	6.9971	47
14	.14320	.98969	.14470	.9110	.0104	.9830	46
15	0.14349	0.98965	0.14499	6.8969	1.0104	6.9690	45
16	.14378	.98961	.14529	.8828	.0105	.9550	44
17	.14407	.98957	.14559	.8687	.0105	.9411	43
18	.14436	.98952	.14588	.8547	.0106	.9273	42
19	.14464	.98948	.14618	.8408	.0106	.9135	41
20	0.14493	0.98944	0.14648	6.8269	1.0107	6.8998	40
21	.14522	.98940	.14677	.8131	.0107	.8861	39
22	.14551	.98936	.14707	.7993	.0107	.8725	38
23	.14579	.98931	.14737	.7856	.0108	.8589	37
24	.14608	.98927	.14767	.7720	.0108	.8454	36
25	0.14637	0.98923	0.14796	6.7584	1.0109	6.8320	35
26	.14666	.98919	.14826	.7448	.0109	.8185	34
27	.14695	.98914	.14856	.7313	.0110	.8052	33
28	.14723	.98910	.14886	.7179	.0110	.7919	32
29	.14752	.98906	.14915	.7045	.0111	.7787	31
30	0.14781	0.98901	0.14945	6.6911	1.0111	6.7655	30
31	.14810	.98897	.14975	.6779	.0111	.7523	29
32	.14838	.98893	.15004	.6646	.0112	.7392	28
33	.14867	.98889	.15034	.6514	.0112	.7262	27
34	.14896	.98884	.15064	.6383	.0113	.7132	26
35	0.14925	0.98880	0.15094	6.6252	1.0113	6.7003	25
36	.14953	.98876	.15123	.6122	.0114	.6874	24
37	.14982	.98871	.15153	.5992	.0114	.6745	23
38	.15011	.98867	.15183	.5863	.0115	.6617	22
39	.15040	.98862	.15213	.5734	.0115	.6490	21
40	0.15068	0.98858	0.15243	6.5605	1.0115	6.6363	20
41	.15097	.98854	.15272	.5478	.0116	.6237	19
42	.15126	.98849	.15302	.5350	.0116	.6111	18
43	.15155	.98845	.15332	.5223	.0117	.5985	17
44	.15183	.98840	.15362	.5097	.0117	.5860	16
45	0.15212	0.98836	0.15391	6.4971	1.0118	6.5736	15
46	.15241	.98832	.15421	.4845	.0118	.5612	14
47	.15270	.98827	.15451	.4720	.0119	.5488	13
48	.15298	.98823	.15481	.4595	.0119	.5365	12
49	.15328	.98818	.15511	.4472	.0119	.5243	11
50	0.15356	0.98814	0.15540	6.4348	1.0120	6.5121	10
51	.15385	.98809	.15570	.4225	.0120	.4999	9
52	.15413	.98805	.15600	.4103	.0121	.4878	8
53	.15442	.98800	.15630	.3980	.0121	.4757	7
54	.15471	.98796	.15659	.3859	.0122	.4637	6
55	0.15500	0.98791	0.15689	6.3737	1.0122	6.4517	5
56	.15528	.98787	.15719	.3616	.0123	.4398	4
57	.15557	.98782	.15749	.3496	.0123	.4279	3
58	.15586	.98778	.15779	.3376	.0124	.4160	2
59	.15615	.98773	.15809	.3257	.0124	.4042	1
60	0.15643	0.98769	0.15838	6.3137	1.0125	6.3924	0
M	Cosine	Sine	Cotan.	Tan.	Cosec.	Secant	M

81°

9°

M	Sine	Cosine	Tan.	Cotan.	Secant	Cosec.	M
0	0.15643	0.98769	0.15838	6.3137	1.0125	6.3924	60
1	.15672	.98764	.15868	.3019	.0125	.3807	59
2	.15701	.98760	.15898	.2901	.0125	.3690	58
3	.15730	.98755	.15928	.2783	.0126	.3574	57
4	.15758	.98750	.15958	.2665	.0126	.3458	56
5	0.15787	0.98746	0.15987	6.2548	1.0127	6.3343	55
6	.15816	.98741	.16017	.2432	.0127	.3228	54
7	.15844	.98737	.16047	.2316	.0128	.3113	53
8	.15873	.98732	.16077	.2200	.0128	.2999	52
9	.15902	.98727	.16107	.2085	.0129	.2885	51
10	0.15931	0.98723	0.16137	6.1970	1.0129	6.2772	50
11	.15959	.98718	.16167	.1856	.0130	.2659	49
12	.15988	.98714	.16196	.1742	.0130	.2546	48
13	.16017	.98709	.16226	.1628	.0131	.2434	47
14	.16045	.98704	.16256	.1515	.0131	.2322	46
15	0.16074	0.98700	0.16286	6.1402	1.0132	6.2211	45
16	.16103	.98695	.16316	.1290	.0132	.2100	44
17	.16132	.98690	.16346	.1178	.0133	.1990	43
18	.16160	.98685	.16376	.1066	.0133	.1880	42
19	.16189	.98681	.16405	.0955	.0134	.1770	41
20	0.16218	0.98676	0.16435	6.0844	1.0134	6.1661	40
21	.16246	.98671	.16465	.0734	.0135	.1552	39
22	.16275	.98667	.16495	.0624	.0135	.1443	38
23	.16304	.98662	.16525	.0514	.0136	.1335	37
24	.16333	.98657	.16555	.0405	.0136	.1227	36
25	0.16361	0.98652	0.16585	6.0296	1.0136	6.1120	35
26	.16390	.98648	.16615	.0188	.0137	.1013	34
27	.16419	.98643	.16644	.0080	.0137	.0906	33
28	.16447	.98638	.16674	5.9972	.0138	.0800	32
29	.16476	.98633	.16704	.9865	.0138	.0694	31
30	0.16505	0.98628	0.16734	5.9758	1.0139	6.0588	30
31	.16533	.98624	.16764	.9651	.0139	.0483	29
32	.16562	.98619	.16794	.9545	.0140	.0379	28
33	.16591	.98614	.16824	.9439	.0140	.0274	27
34	.16619	.98609	.16854	.9333	.0141	.0170	26
35	0.16648	0.98604	0.16884	5.9228	1.0141	6.0066	25
36	.16677	.98600	.16914	.9123	.0142	5.9963	24
37	.16706	.98595	.16944	.9019	.0142	.9860	23
38	.16734	.98590	.16973	.8915	.0143	.9758	22
39	.16763	.98585	.17003	.8811	.0143	.9655	21
40	0.16791	0.98580	0.17033	5.8708	1.0144	5.9554	20
41	.16820	.98575	.17063	.8605	.0144	.9452	19
42	.16849	.98570	.17093	.8502	.0145	.9351	18
43	.16878	.98565	.17123	.8400	.0145	.9250	17
44	.16906	.98560	.17153	.8298	.0146	.9150	16
45	0.16935	0.98556	0.17183	5.8196	1.0146	5.9049	15
46	.16964	.98551	.17213	.8095	.0147	.8950	14
47	.16992	.98546	.17243	.7994	.0147	.8850	13
48	.17021	.98541	.17273	.7894	.0148	.8751	12
49	.17050	.98536	.17303	.7794	.0148	.8652	11
50	0.17078	0.98531	0.17333	5.7694	1.0149	5.8554	10
51	.17107	.98526	.17363	.7594	.0150	.8456	9
52	.17136	.98521	.17393	.7495	.0150	.8358	8
53	.17164	.98516	.17423	.7396	.0151	.8261	7
54	.17193	.98511	.17453	.7297	.0151	.8163	6
55	0.17221	0.98506	0.17483	5.7199	1.0152	5.8067	5
56	.17250	.98501	.17513	.7101	.0152	.7970	4
57	.17279	.98496	.17543	.7004	.0153	.7874	3
58	.17307	.98491	.17573	.6906	.0153	.7778	2
59	.17336	.98486	.17603	.6809	.0154	.7683	1
60	0.17365	0.98481	0.17633	5.6713	1.0154	5.7588	0
M	Cosine	Sine	Cotan.	Tan.	Cosec.	Secant	M

80°

10°

M	Sine	Cosine	Tan.	Cotan.	Secant	Cosec.	M
0	0.17365	0.98481	0.17633	5.6713	1.0154	5.7588	60
1	.17393	.98476	.17663	.6616	.0155	.7493	59
2	.17422	.98471	.17693	.6520	.0155	.7398	58
3	.17451	.98465	.17723	.6425	.0156	.7304	57
4	.17479	.98460	.17753	.6329	.0156	.7210	56
5	0.17508	0.98455	0.17783	5.6234	1.0157	5.7117	55
6	.17537	.98450	.17813	.6140	.0157	.7023	54
7	.17565	.98445	.17843	.6045	.0158	.6930	53
8	.17594	.98440	.17873	.5951	.0158	.6838	52
9	.17622	.98435	.17903	.5857	.0159	.6745	51
10	0.17651	0.98430	0.17933	5.5764	1.0159	5.6653	50
11	.17680	.98425	.17963	.5670	.0160	.6561	49
12	.17708	.98419	.17993	.5578	.0160	.6470	48
13	.17737	.98414	.18023	.5485	.0161	.6379	47
14	.17766	.98409	.18053	.5393	.0162	.6288	46
15	0.17794	0.98404	0.18083	5.5301	1.0162	5.6197	45
16	.17823	.98399	.18113	.5209	.0163	.6107	44
17	.17852	.98394	.18143	.5117	.0163	.6017	43
18	.17880	.98388	.18173	.5026	.0164	.5928	42
19	.17909	.98383	.18203	.4936	.0164	.5838	41
20	0.17937	0.98378	0.18233	5.4845	1.0165	5.5749	40
21	.17966	.98373	.18263	.4755	.0165	.5660	39
22	.17995	.98368	.18293	.4665	.0166	.5572	38
23	.18023	.98362	.18323	.4575	.0166	.5484	37
24	.18052	.98357	.18353	.4486	.0167	.5396	36
25	0.18080	0.98352	0.18383	5.4396	1.0167	5.5308	35
26	.18109	.98347	.18413	.4308	.0168	.5221	34
27	.18138	.98341	.18444	.4219	.0169	.5134	33
28	.18166	.98336	.18474	.4131	.0169	.5047	32
29	.18195	.98331	.18504	.4043	.0170	.4960	31
30	0.18223	0.98325	0.18534	5.3955	1.0170	5.4874	30
31	.18252	.98320	.18564	.3868	.0171	.4788	29
32	.18281	.98315	.18594	.3780	.0171	.4702	28
33	.18309	.98309	.18624	.3694	.0172	.4617	27
34	.18338	.98304	.18654	.3607	.0172	.4532	26
35	0.18366	0.98299	0.18684	5.3521	1.0173	5.4447	25
36	.18395	.98293	.18714	.3434	.0174	.4362	24
37	.18424	.98288	.18745	.3349	.0174	.4278	23
38	.18452	.98283	.18775	.3263	.0175	.4194	22
39	.18481	.98277	.18805	.3178	.0175	.4110	21
40	0.18509	0.98272	0.18835	5.3093	1.0176	5.4026	20
41	.18538	.98267	.18865	.3008	.0176	.3943	19
42	.18567	.98261	.18895	.2923	.0177	.3860	18
43	.18595	.98256	.18925	.2839	.0177	.3777	17
44	.18624	.98250	.18955	.2755	.0178	.3695	16
45	0.18652	0.98245	0.18985	5.2671	1.0179	5.3612	15
46	.18681	.98240	.19016	.2588	.0179	.3530	14
47	.18709	.98234	.19046	.2505	.0180	.3449	13
48	.18738	.98229	.19076	.2422	.0180	.3367	12
49	.18767	.98223	.19106	.2339	.0181	.3286	11
50	0.18795	0.98218	0.19136	5.2257	1.0181	5.3205	10
51	.18824	.98212	.19166	.2174	.0182	.3124	9
52	.18852	.98207	.19197	.2092	.0182	.3044	8
53	.18881	.98201	.19227	.2011	.0183	.2963	7
54	.18909	.98196	.19257	.1929	.0184	.2883	6
55	0.18938	0.98190	0.19287	5.1848	1.0184	5.2803	5
56	.18967	.98185	.19317	.1767	.0185	.2724	4
57	.18995	.98179	.19347	.1686	.0185	.2645	3
58	.19024	.98174	.19378	.1606	.0186	.2566	2
59	.19052	.98168	.19408	.1525	.0186	.2487	1
60	0.19081	0.98163	0.19438	5.1445	1.0187	5.2408	0
M	Cosine	Sine	Cotan.	Tan.	Cosec.	Secant	M

79°

11°

M	Sine	Cosine	Tan.	Cotan.	Secant	Cosec.	M
0	0.19081	0.98163	0.19438	5.1445	1.0187	5.2408	60
1	.19109	.98157	.19468	.1366	.0188	.2330	59
2	.19138	.98152	.19498	.1286	.0188	.2252	58
3	.19166	.98146	.19529	.1207	.0189	.2174	57
4	.19195	.98140	.19559	.1128	.0189	.2097	56
5	0.19224	0.98135	0.19589	5.1049	1.0190	5.2019	55
6	.19252	.98129	.19619	.0970	.0191	.1942	54
7	.19281	.98124	.19649	.0892	.0191	.1865	53
8	.19309	.98118	.19680	.0814	.0192	.1788	52
9	.19338	.98112	.19710	.0736	.0192	.1712	51
10	0.19366	0.98107	0.19740	5.0658	1.0193	5.1636	50
11	.19395	.98101	.19770	.0581	.0193	.1560	49
12	.19423	.98095	.19800	.0504	.0194	.1484	48
13	.19452	.98090	.19831	.0427	.0195	.1409	47
14	.19480	.98084	.19861	.0350	.0195	.1333	46
15	0.19509	0.98078	0.19891	5.0273	1.0196	5.1258	45
16	.19537	.98073	.19921	.0197	.0196	.1183	44
17	.19566	.98067	.19952	.0121	.0197	.1109	43
18	.19595	.98061	.19982	.0045	.0198	.1034	42
19	.19623	.98056	.20012	4.9969	.0198	.0960	41
20	0.19652	0.98050	0.20042	4.9894	1.0199	5.0886	40
21	.19680	.98044	.20073	.9819	.0199	.0812	39
22	.19709	.98039	.20103	.9744	.0200	.0739	38
23	.19737	.98033	.20133	.9669	.0201	.0666	37
24	.19766	.98027	.20163	.9594	.0201	.0593	36
25	0.19794	0.98021	0.20194	4.9520	1.0202	5.0520	35
26	.19823	.98016	.20224	.9446	.0202	.0447	34
27	.19851	.98010	.20254	.9372	.0203	.0375	33
28	.19880	.98004	.20285	.9298	.0204	.0302	32
29	.19908	.97998	.20315	.9225	.0204	.0230	31
30	0.19937	0.97992	0.20345	4.9151	1.0205	5.0158	30
31	.19965	.97987	.20375	.9078	.0205	.0087	29
32	.19994	.97981	.20406	.9006	.0206	.0015	28
33	.20022	.97975	.20436	.8933	.0207	4.9944	27
34	.20051	.97969	.20466	.8860	.0207	.9873	26
35	0.20079	0.97963	0.20497	4.8788	1.0208	4.9802	25
36	.20108	.97957	.20527	.8716	.0208	.9732	24
37	.20136	.97952	.20557	.8644	.0209	.9661	23
38	.20165	.97946	.20588	.8573	.0210	.9591	22
39	.20193	.97940	.20618	.8501	.0210	.9521	21
40	0.20222	0.97934	0.20648	4.8430	1.0211	4.9452	20
41	.20250	.97928	.20679	.8359	.0211	.9382	19
42	.20279	.97922	.20709	.8288	.0212	.9313	18
43	.20307	.97916	.20739	.8217	.0213	.9243	17
44	.20336	.97910	.20770	.8147	.0213	.9175	16
45	0.20364	0.97904	0.20800	4.8077	1.0214	4.9106	15
46	.20393	.97899	.20830	.8007	.0215	.9037	14
47	.20421	.97893	.20861	.7937	.0215	.8969	13
48	.20450	.97887	.20891	.7867	.0216	.8901	12
49	.20478	.97881	.20921	.7798	.0216	.8833	11
50	0.20506	0.97875	0.20952	4.7728	1.0217	4.8765	10
51	.20535	.97869	.20982	.7659	.0218	.8697	9
52	.20563	.97863	.21012	.7591	.0218	.8630	8
53	.20592	.97857	.21043	.7522	.0219	.8563	7
54	.20620	.97851	.21073	.7453	.0220	.8496	6
55	0.20649	0.97845	0.21104	4.7385	1.0220	4.8429	5
56	.20677	.97839	.21134	.7317	.0221	.8362	4
57	.20706	.97833	.21164	.7249	.0221	.8296	3
58	.20734	.97827	.21195	.7181	.0222	.8229	2
59	.20763	.97821	.21225	.7114	.0223	.8163	1
60	0.20791	0.97815	0.21256	4.7046	1.0223	4.8097	0
M	Cosine	Sine	Cotan.	Tan.	Cosec.	Secant	M

78°

TABLES OF NATURAL TRIGONOMETRIC FUNCTIONS

12°

M	Sine	Cosine	Tan.	Cotan.	Secant	Cosec.	M
0	0.20791	0.97815	0.21256	4.7046	1.0223	4.8097	60
1	.20820	.97809	.21286	.6979	.0224	.8032	59
2	.20848	.97803	.21316	.6912	.0225	.7966	58
3	.20876	.97797	.21347	.6845	.0225	.7901	57
4	.20905	.97790	.21377	.6778	.0226	.7835	56
5	0.20933	0.97784	0.21408	4.6712	1.0226	4.7770	55
6	.20962	.97778	.21438	.6646	.0227	.7706	54
7	.20990	.97772	.21468	.6580	.0228	.7641	53
8	.21019	.97766	.21499	.6514	.0228	.7576	52
9	.21047	.97760	.21529	.6448	.0229	.7512	51
10	0.21076	0.97754	0.21560	4.6382	1.0230	4.7448	50
11	.21104	.97748	.21590	.6317	.0230	.7384	49
12	.21132	.97741	.21621	.6252	.0231	.7320	48
13	.21161	.97735	.21651	.6187	.0232	.7257	47
14	.21189	.97729	.21682	.6122	.0232	.7193	46
15	0.21218	0.97723	0.21712	4.6057	1.0233	4.7130	45
16	.21246	.97717	.21742	.5993	.0234	.7067	44
17	.21275	.97711	.21773	.5928	.0234	.7004	43
18	.21303	.97704	.21803	.5864	.0235	.6942	42
19	.21331	.97698	.21834	.5800	.0235	.6879	41
20	0.21360	0.97692	0.21864	4.5736	1.0236	4.6817	40
21	.21388	.97686	.21895	.5673	.0237	.6754	39
22	.21417	.97680	.21925	.5609	.0237	.6692	38
23	.21445	.97673	.21956	.5546	.0238	.6631	37
24	.21473	.97667	.21986	.5483	.0238	.6569	36
25	0.21502	0.97661	0.22017	4.5420	1.0239	4.6507	35
26	.21530	.97655	.22047	.5357	.0240	.6446	34
27	.21559	.97648	.22073	.5294	.0241	.6385	33
28	.21587	.97642	.22103	.5232	.0241	.6324	32
29	.21615	.97636	.22139	.5169	.0242	.6263	31
30	0.21644	0.97630	0.22169	4.5107	1.0243	4.6201	30
31	.21672	.97623	.22200	.5045	.0243	.6142	29
32	.21701	.97617	.22230	.4983	.0244	.6081	28
33	.21729	.97611	.22261	.4921	.0245	.6021	27
34	.21757	.97604	.22291	.4860	.0245	.5961	26
35	0.21786	0.97598	0.22322	4.4799	1.0246	4.5901	25
36	.21814	.97592	.22353	.4737	.0247	.5841	24
37	.21843	.97585	.22383	.4676	.0247	.5782	23
38	.21871	.97579	.22414	.4615	.0248	.5722	22
39	.21899	.97573	.22441	.4555	.0249	.5663	21
40	0.21928	0.97566	0.22475	4.4494	1.0249	4.5604	20
41	.21956	.97560	.22505	.4434	.0250	.5545	19
42	.21985	.97553	.22536	.4373	.0251	.5486	18
43	.22013	.97547	.22566	.4313	.0251	.5428	17
44	.22041	.97541	.22597	.4253	.0252	.5369	16
45	0.22070	0.97534	0.22628	4.4194	1.0253	4.5311	15
46	.22098	.97528	.22658	.4134	.0253	.5253	14
47	.22126	.97521	.22689	.4074	.0254	.5195	13
48	.22155	.97515	.22719	.4015	.0255	.5137	12
49	.22183	.97508	.22750	.3956	.0255	.5079	11
50	0.22211	0.97502	0.22781	4.3897	1.0256	4.5021	10
51	.22240	.97495	.22811	.3838	.0257	.4964	9
52	.22268	.97489	.22842	.3779	.0257	.4907	8
53	.22297	.97483	.22872	.3721	.0258	.4850	7
54	.22325	.97476	.22903	.3662	.0259	.4793	6
55	0.22353	0.97470	0.22934	4.3604	1.0260	4.4736	5
56	.22382	.97463	.22964	.3546	.0260	.4679	4
57	.22410	.97457	.22995	.3488	.0261	.4623	3
58	.22438	.97450	.23025	.3430	.0262	.4566	2
59	.22467	.97443	.23056	.3372	.0262	.4510	1
60	0.22495	0.97437	0.23087	4.3315	1.0263	4.4454	0
M	Cosine	Sine	Cotan.	Tan.	Cosec.	Secant	M

77°

13°

M	Sine	Cosine	Tan.	Cotan.	Secant	Cosec.	M
0	0.22495	0.97437	0.23087	4.3315	1.0263	4.4454	60
1	.22523	.97430	.23117	.3257	.0264	.4398	59
2	.22552	.97424	.23148	.3200	.0264	.4342	58
3	.22580	.97417	.23179	.3143	.0265	.4287	57
4	.22608	.97411	.23209	.3086	.0266	.4231	56
5	0.22637	0.97404	0.23240	4.3029	1.0266	4.4176	55
6	.22665	.97398	.23270	.2972	.0267	.4121	54
7	.22693	.97391	.23301	.2916	.0268	.4065	53
8	.22722	.97384	.23332	.2859	.0268	.4011	52
9	.22750	.97378	.23363	.2803	.0269	.3956	51
10	0.22778	0.97371	0.23393	4.2747	1.0270	4.3901	50
11	.22807	.97364	.23424	.2691	.0271	.3847	49
12	.22835	.97358	.23455	.2635	.0271	.3792	48
13	.22863	.97351	.23485	.2579	.0272	.3738	47
14	.22892	.97344	.23516	.2524	.0273	.3684	46
15	0.22920	0.97338	0.23547	4.2468	1.0273	4.3630	45
16	.22948	.97331	.23577	.2413	.0274	.3576	44
17	.22977	.97324	.23608	.2358	.0275	.3522	43
18	.23005	.97318	.23639	.2303	.0276	.3469	42
19	.23033	.97311	.23670	.2248	.0276	.3415	41
20	0.23061	0.97304	0.23700	4.2193	1.0277	4.3362	40
21	.23090	.97298	.23731	.2139	.0278	.3309	39
22	.23118	.97291	.23762	.2084	.0278	.3256	38
23	.23146	.97284	.23793	.2030	.0279	.3203	37
24	.23175	.97277	.23823	.1976	.0280	.3150	36
25	0.23203	0.97271	0.23854	4.1921	1.0280	4.3098	35
26	.23231	.97264	.23885	.1867	.0281	.3045	34
27	.23260	.97257	.23916	.1814	.0282	.2993	33
28	.23288	.97250	.23946	.1760	.0283	.2941	32
29	.23316	.97244	.23977	.1706	.0283	.2888	31
30	0.23344	0.97237	0.24008	4.1653	1.0284	4.2836	30
31	.23373	.97230	.24039	.1600	.0285	.2785	29
32	.23401	.97223	.24069	.1546	.0285	.2733	28
33	.23429	.97216	.24100	.1493	.0286	.2681	27
34	.23458	.97210	.24131	.1440	.0287	.2630	26
35	0.23486	0.97203	0.24162	4.1388	1.0288	4.2579	25
36	.23514	.97196	.24192	.1335	.0288	.2527	24
37	.23542	.97189	.24223	.1282	.0289	.2476	23
38	.23571	.97182	.24254	.1230	.0290	.2425	22
39	.23599	.97175	.24285	.1178	.0291	.2375	21
40	0.23627	0.97169	0.24316	4.1126	1.0291	4.2324	20
41	.23655	.97162	.24346	.1073	.0292	.2273	19
42	.23684	.97155	.24377	.1022	.0293	.2223	18
43	.23712	.97148	.24408	.0970	.0293	.2173	17
44	.23740	.97141	.24439	.0918	.0294	.2122	16
45	0.23768	0.97134	0.24470	4.0867	1.0295	4.2072	15
46	.23797	.97127	.24501	.0815	.0296	.2022	14
47	.23825	.97120	.24531	.0764	.0296	.1972	13
48	.23853	.97113	.24562	.0713	.0297	.1923	12
49	.23881	.97106	.24593	.0662	.0298	.1873	11
50	0.23910	0.97099	0.24624	4.0611	1.0299	4.1824	10
51	.23938	.97092	.24655	.0560	.0299	.1774	9
52	.23966	.97086	.24686	.0509	.0300	.1725	8
53	.23994	.97079	.24717	.0458	.0301	.1676	7
54	.24023	.97072	.24747	.0408	.0302	.1627	6
55	0.24051	0.97065	0.24778	4.0358	1.0302	4.1578	5
56	.24079	.97058	.24809	.0307	.0303	.1530	4
57	.24107	.97051	.24840	.0257	.0304	.1481	3
58	.24136	.97044	.24871	.0207	.0305	.1432	2
59	.24164	.97037	.24902	.0157	.0305	.1384	1
60	0.24192	0.97029	0.24933	4.0108	1.0306	4.1336	0
M	Cosine	Sine	Cotan.	Tan.	Cosec.	Secant	M

76°

14°

M	Sine	Cosine	Tan.	Cotan.	Secant	Cosec.	M
0	0.24192	0.97029	0.24933	4.0108	1.0306	4.1336	60
1	.24220	.97022	.24964	.0058	.0307	.1287	59
2	.24249	.97015	.24995	.0009	.0308	.1239	58
3	.24277	.97008	.25025	3.9959	.0308	.1191	57
4	.24305	.97001	.25056	.9910	.0309	.1144	56
5	0.24333	0.96994	0.25087	3.9861	1.0310	4.1096	55
6	.24361	.96987	.25118	.9812	.0311	.1048	54
7	.24390	.96980	.25149	.9763	.0311	.1001	53
8	.24418	.96973	.25180	.9714	.0312	.0953	52
9	.24446	.96966	.25211	.9665	.0313	.0906	51
10	0.24474	0.96959	0.25242	3.9616	1.0314	4.0859	50
11	.24502	.96952	.25273	.9568	.0314	.0812	49
12	.24531	.96944	.25304	.9520	.0315	.0765	48
13	.24559	.96937	.25335	.9471	.0316	.0718	47
14	.24587	.96930	.25366	.9423	.0317	.0672	46
15	0.24615	0.96923	0.25397	3.9375	1.0317	4.0625	45
16	.24643	.96916	.25428	.9327	.0318	.0579	44
17	.24672	.96909	.25459	.9279	.0319	.0532	43
18	.24700	.96901	.25490	.9231	.0320	.0486	42
19	.24728	.96894	.25521	.9184	.0320	.0440	41
20	0.24756	0.96887	0.25552	3.9136	1.0321	4.0394	40
21	.24784	.96880	.25583	.9089	.0322	.0348	39
22	.24813	.96873	.25614	.9042	.0323	.0302	38
23	.24841	.96865	.25645	.8994	.0323	.0256	37
24	.24869	.96858	.25676	.8947	.0324	.0211	36
25	0.24897	0.96851	0.25707	3.8900	1.0325	4.0165	35
26	.24925	.96844	.25738	.8853	.0326	.0120	34
27	.24953	.96836	.25769	.8807	.0327	.0074	33
28	.24982	.96829	.25800	.8760	.0327	.0029	32
29	.25010	.96822	.25831	.8713	.0328	3.9984	31
30	0.25038	0.96815	0.25862	3.8667	1.0329	3.9939	30
31	.25066	.96807	.25893	.8621	.0330	.9894	29
32	.25094	.96800	.25924	.8574	.0330	.9850	28
33	.25122	.96793	.25955	.8528	.0331	.9805	27
34	.25151	.96785	.25986	.8482	.0332	.9760	26
35	0.25179	0.96778	0.26017	3.8436	1.0333	3.9716	25
36	.25207	.96771	.26048	.8390	.0334	.9672	24
37	.25235	.96763	.26079	.8345	.0334	.9627	23
38	.25263	.96756	.26110	.8299	.0335	.9583	22
39	.25291	.96749	.26141	.8254	.0336	.9539	21
40	0.25319	0.96741	0.26172	3.8208	1.0337	3.9495	20
41	.25348	.96734	.26203	.8163	.0338	.9451	19
42	.25376	.96727	.26234	.8118	.0338	.9408	18
43	.25404	.96719	.26266	.8073	.0339	.9364	17
44	.25432	.96712	.26297	.8027	.0340	.9320	16
45	0.25460	0.96704	0.26328	3.7983	1.0341	3.9277	15
46	.25488	.96697	.26359	.7938	.0341	.9234	14
47	.25516	.96690	.26390	.7893	.0342	.9190	13
48	.25544	.96682	.26421	.7848	.0343	.9147	12
49	.25573	.96675	.26452	.7804	.0344	.9104	11
50	0.25601	0.96667	0.26483	3.7759	1.0345	3.9061	10
51	.25629	.96660	.26514	.7715	.0345	.9018	9
52	.25657	.96652	.26546	.7671	.0346	.8976	8
53	.25685	.96645	.26577	.7627	.0347	.8933	7
54	.25713	.96638	.26608	.7583	.0348	.8890	6
55	0.25741	0.96630	0.26639	3.7539	1.0349	3.8848	5
56	.25769	.96623	.26670	.7495	.0349	.8805	4
57	.25798	.96615	.26701	.7451	.0350	.8763	3
58	.25826	.96608	.26732	.7407	.0351	.8721	2
59	.25854	.96600	.26764	.7364	.0352	.8679	1
60	0.25882	0.96592	0.26795	3.7320	1.0353	3.8637	0
M	Cosine	Sine	Cotan.	Tan.	Cosec.	Secant	M

75°

15°

M	Sine	Cosine	Tan.	Cotan.	Secant	Cosec.	M
0	0.25882	0.96592	0.26795	3.7320	1.0353	3.8637	60
1	.25910	.96585	.26826	.7277	.0353	.8595	59
2	.25938	.96577	.26857	.7234	.0354	.8553	58
3	.25966	.96570	.26888	.7191	.0355	.8512	57
4	.25994	.96562	.26920	.7147	.0356	.8470	56
5	0.26022	0.96555	0.26951	3.7104	1.0357	3.8428	55
6	.26050	.96547	.26982	.7062	.0358	.8387	54
7	.26078	.96540	.27013	.7019	.0358	.8346	53
8	.26107	.96532	.27044	.6976	.0359	.8304	52
9	.26135	.96524	.27076	.6933	.0360	.8263	51
10	0.26163	0.96517	0.27107	3.6891	1.0361	3.8222	50
11	.26191	.96509	.27138	.6848	.0362	.8181	49
12	.26219	.96502	.27169	.6806	.0362	.8140	48
13	.26247	.96494	.27201	.6764	.0363	.8100	47
14	.26275	.96486	.27232	.6722	.0364	.8059	46
15	0.26303	0.96479	0.27263	3.6679	1.0365	3.8018	45
16	.26331	.96471	.27294	.6637	.0366	.7978	44
17	.26359	.96463	.27326	.6596	.0367	.7937	43
18	.26387	.96456	.27357	.6554	.0367	.7897	42
19	.26415	.96448	.27388	.6512	.0368	.7857	41
20	0.26443	0.96440	0.27419	3.6470	1.0369	3.7816	40
21	.26471	.96433	.27451	.6429	.0370	.7776	39
22	.26499	.96425	.27482	.6387	.0371	.7736	38
23	.26527	.96417	.27513	.6346	.0371	.7697	37
24	.26556	.96409	.27545	.6305	.0372	.7657	36
25	0.26584	0.96402	0.27576	3.6263	1.0373	3.7617	35
26	.26612	.96394	.27607	.6222	.0374	.7577	34
27	.26640	.96386	.27638	.6181	.0375	.7538	33
28	.26668	.96378	.27670	.6140	.0376	.7498	32
29	.26696	.96371	.27701	.6100	.0376	.7459	31
30	0.26724	0.96363	0.27732	3.6059	1.0377	3.7420	30
31	.26752	.96355	.27764	.6018	.0378	.7380	29
32	.26780	.96347	.27795	.5977	.0379	.7341	28
33	.26808	.96340	.27826	.5937	.0380	.7302	27
34	.26836	.96332	.27858	.5896	.0381	.7263	26
35	0.26864	0.96324	0.27889	3.5856	1.0382	3.7224	25
36	.26892	.96316	.27920	.5816	.0382	.7186	24
37	.26920	.96308	.27952	.5776	.0383	.7147	23
38	.26948	.96301	.27983	.5736	.0384	.7108	22
39	.26976	.96293	.28014	.5696	.0385	.7070	21
40	0.27004	0.96285	0.28046	3.5656	1.0386	3.7031	20
41	.27032	.96277	.28077	.5616	.0387	.6993	19
42	.27060	.96269	.28109	.5576	.0387	.6955	18
43	.27088	.96261	.28140	.5536	.0388	.6917	17
44	.27116	.96253	.28171	.5497	.0389	.6878	16
45	0.27144	0.96245	0.28203	3.5457	1.0390	3.6840	15
46	.27172	.96238	.28234	.5418	.0391	.6802	14
47	.27200	.96230	.28266	.5378	.0392	.6765	13
48	.27228	.96222	.28297	.5339	.0393	.6727	12
49	.27256	.96214	.28328	.5300	.0393	.6689	11
50	0.27284	0.96206	0.28360	3.5261	1.0394	3.6651	10
51	.27312	.96198	.28391	.5222	.0395	.6614	9
52	.27340	.96190	.28423	.5183	.0396	.6576	8
53	.27368	.96182	.28454	.5144	.0397	.6539	7
54	.27396	.96174	.28486	.5105	.0398	.6502	6
55	0.27424	0.96166	0.28517	3.5066	1.0399	3.6464	5
56	.27452	.96158	.28549	.5028	.0399	.6427	4
57	.27480	.96150	.28580	.4989	.0400	.6390	3
58	.27508	.96142	.28611	.4951	.0401	.6353	2
59	.27536	.96134	.28643	.4912	.0402	.6316	1
60	0.27564	0.96126	0.28674	3.4874	1.0403	3.6279	0
M	Cosine	Sine	Cotan.	Tan.	Cosec.	Secant	M

74°

16°

M	Sine	Cosine	Tan.	Cotan.	Secant	Cosec.	M
0	0.27564	0.96126	0.28674	3.4874	1.0403	3.6279	60
1	.27592	.96118	.28706	.4836	.0404	.6243	59
2	.27620	.96110	.28737	.4798	.0405	.6206	58
3	.27648	.96102	.28769	.4760	.0406	.6169	57
4	.27676	.96094	.28800	.4722	.0406	.6133	56
5	0.27703	0.96086	0.28832	3.4684	1.0407	3.6096	55
6	.27731	.96078	.28863	.4646	.0408	.6060	54
7	.27759	.96070	.28895	.4608	.0409	.6024	53
8	.27787	.96062	.28926	.4570	.0410	.5987	52
9	.27815	.96054	.28958	.4533	.0411	.5951	51
10	0.27843	0.96045	0.28990	3.4495	1.0412	3.5915	50
11	.27871	.96037	.29021	.4458	.0413	.5879	49
12	.27899	.96029	.29053	.4420	.0413	.5843	48
13	.27927	.96021	.29084	.4383	.0414	.5807	47
14	.27955	.96013	.29116	.4346	.0415	.5772	46
15	0.27983	0.96005	0.29147	3.4308	1.0416	3.5736	45
16	.28011	.95997	.29179	.4271	.0417	.5700	44
17	.28039	.95989	.29210	.4234	.0418	.5665	43
18	.28067	.95980	.29242	.4197	.0419	.5629	42
19	.28095	.95972	.29274	.4160	.0420	.5594	41
20	0.28122	0.95964	0.29305	3.4124	1.0420	3.5559	40
21	.28150	.95956	.29337	.4087	.0421	.5523	39
22	.28178	.95948	.29368	.4050	.0422	.5488	38
23	.28206	.95940	.29400	.4014	.0423	.5453	37
24	.28234	.95931	.29432	.3977	.0424	.5418	36
25	0.28262	0.95923	0.29463	3.3941	1.0425	3.5383	35
26	.28290	.95915	.29495	.3904	.0426	.5348	34
27	.28318	.95907	.29526	.3868	.0427	.5313	33
28	.28346	.95898	.29558	.3832	.0428	.5279	32
29	.28374	.95890	.29590	.3795	.0428	.5244	31
30	0.28401	0.95882	0.29621	3.3759	1.0429	3.5209	30
31	.28429	.95874	.29653	.3723	.0430	.5175	29
32	.28457	.95865	.29685	.3687	.0431	.5140	28
33	.28485	.95857	.29716	.3651	.0432	.5106	27
34	.28513	.95849	.29748	.3616	.0433	.5072	26
35	0.28541	0.95840	0.29780	3.3580	1.0434	3.5037	25
36	.28569	.95832	.29811	.3544	.0435	.5003	24
37	.28597	.95824	.29843	.3509	.0436	.4969	23
38	.28624	.95816	.29875	.3473	.0437	.4935	22
39	.28652	.95807	.29906	.3438	.0438	.4901	21
40	0.28680	0.95799	0.29938	3.3402	1.0438	3.4867	20
41	.28708	.95791	.29970	.3367	.0439	.4833	19
42	.28736	.95782	.30001	.3332	.0440	.4799	18
43	.28764	.95774	.30033	.3296	.0441	.4766	17
44	.28792	.95765	.30065	.3261	.0442	.4732	16
45	0.28820	0.95757	0.30096	3.3226	1.0443	3.4698	15
46	.28847	.95749	.30128	.3191	.0444	.4665	14
47	.28875	.95740	.30160	.3156	.0445	.4632	13
48	.28903	.95732	.30192	.3121	.0446	.4598	12
49	.28931	.95723	.30223	.3087	.0447	.4565	11
50	0.28959	0.95715	0.30255	3.3052	1.0448	3.4532	10
51	.28987	.95707	.30287	.3017	.0448	.4498	9
52	.29014	.95698	.30319	.2983	.0449	.4465	8
53	.29042	.95690	.30350	.2948	.0450	.4432	7
54	.29070	.95681	.30382	.2914	.0451	.4399	6
55	0.29098	0.95673	0.30414	3.2879	1.0452	3.4366	5
56	.29126	.95664	.30446	.2845	.0453	.4334	4
57	.29154	.95656	.30478	.2811	.0454	.4301	3
58	.29181	.95647	.30509	.2777	.0455	.4268	2
59	.29209	.95639	.30541	.2742	.0456	.4236	1
60	0.29237	0.95630	0.30573	3.2708	1.0457	3.4203	0
M	Cosine	Sine	Cotan.	Tan.	Cosec.	Secant	M

73°

17°

M	Sine	Cosine	Tan.	Cotan.	Secant	Cosec.	M
0	0.29237	0.95630	0.30573	3.2708	1.0457	3.4203	60
1	.29265	.95622	.30605	.2674	.0458	.4170	59
2	.29293	.95613	.30637	.2640	.0459	.4138	58
3	.29321	.95605	.30668	.2607	.0460	.4106	57
4	.29348	.95596	.30700	.2573	.0461	.4073	56
5	0.29376	0.95588	0.30732	3.2539	1.0461	3.4041	55
6	.29404	.95579	.30764	.2505	.0462	.4009	54
7	.29432	.95571	.30796	.2472	.0463	.3977	53
8	.29460	.95562	.30828	.2438	.0464	.3945	52
9	.29487	.95554	.30859	.2405	.0465	.3913	51
10	0.29515	0.95545	0.30891	3.2371	1.0466	3.3881	50
11	.29543	.95536	.30923	.2338	.0467	.3849	49
12	.29571	.95528	.30955	.2305	.0468	.3817	48
13	.29598	.95519	.30987	.2271	.0469	.3785	47
14	.29626	.95511	.31019	.2238	.0470	.3754	46
15	0.29654	0.95502	0.31051	3.2205	1.0471	3.3722	45
16	.29682	.95493	.31083	.2172	.0472	.3690	44
17	.29710	.95485	.31115	.2139	.0473	.3659	43
18	.29737	.95476	.31147	.2106	.0474	.3627	42
19	.29765	.95467	.31178	.2073	.0475	.3596	41
20	0.29793	0.95459	0.31210	3.2041	1.0476	3.3565	40
21	.29821	.95450	.31242	.2008	.0477	.3534	39
22	.29848	.95441	.31274	.1975	.0478	.3502	38
23	.29876	.95433	.31306	.1942	.0478	.3471	37
24	.29904	.95424	.31338	.1910	.0479	.3440	36
25	0.29932	0.95415	0.31370	3.1877	1.0480	3.3409	35
26	.29959	.95407	.31402	.1845	.0481	.3378	34
27	.29987	.95398	.31434	.1813	.0482	.3347	33
28	.30015	.95389	.31466	.1780	.0483	.3316	32
29	.30043	.95380	.31498	.1748	.0484	.3286	31
30	0.30070	0.95372	0.31530	3.1716	1.0485	3.3255	30
31	.30098	.95363	.31562	.1684	.0486	.3224	29
32	.30126	.95354	.31594	.1652	.0487	.3194	28
33	.30154	.95345	.31625	.1620	.0488	.3163	27
34	.30181	.95337	.31658	.1588	.0489	.3133	26
35	0.30209	0.95328	0.31690	3.1556	1.0490	3.3102	25
36	.30237	.95319	.31722	.1524	.0491	.3072	24
37	.30265	.95310	.31754	.1492	.0492	.3042	23
38	.30292	.95301	.31786	.1460	.0493	.3011	22
39	.30320	.95293	.31818	.1429	.0494	.2981	21
40	0.30348	0.95284	0.31850	3.1397	1.0495	3.2951	20
41	.30375	.95275	.31882	.1366	.0496	.2921	19
42	.30403	.95266	.31914	.1334	.0497	.2891	18
43	.30431	.95257	.31946	.1303	.0498	.2861	17
44	.30459	.95248	.31978	.1271	.0499	.2831	16
45	0.30486	0.95239	0.32010	3.1240	1.0500	3.2801	15
46	.30514	.95231	.32042	.1209	.0501	.2772	14
47	.30542	.95222	.32074	.1177	.0502	.2742	13
48	.30569	.95213	.32106	.1146	.0503	.2712	12
49	.30597	.95204	.32138	.1115	.0504	.2683	11
50	0.30625	0.95195	0.32171	3.1084	1.0505	3.2653	10
51	.30653	.95186	.32203	.1053	.0506	.2624	9
52	.30680	.95177	.32235	.1022	.0507	.2594	8
53	.30708	.95168	.32267	.0991	.0508	.2565	7
54	.30736	.95159	.32299	.0960	.0509	.2535	6
55	0.30763	0.95150	0.32331	3.0930	1.0510	3.2506	5
56	.30791	.95141	.32363	.0899	.0511	.2477	4
57	.30819	.95132	.32395	.0868	.0512	.2448	3
58	.30846	.95124	.32428	.0838	.0513	.2419	2
59	.30874	.95115	.32460	.0807	.0514	.2390	1
60	0.30902	0.95106	0.32492	3.0777	1.0515	3.2361	0
M	Cosine	Sine	Cotan.	Tan.	Cosec.	Secant	M

72°

18°

M	Sine	Cosine	Tan.	Cotan.	Secant	Cosec.	M
0	0.30902	0.95106	0.32492	3.0777	1.0515	3.2361	60
1	.30929	.95097	.32524	.0746	.0516	.2332	59
2	.30957	.95088	.32556	.0716	.0517	.2303	58
3	.30985	.95079	.32588	.0686	.0518	.2274	57
4	.31012	.95070	.32621	.0655	.0519	.2245	56
5	0.31040	0.95061	0.32653	3.0625	1.0520	3.2216	55
6	.31068	.95051	.32685	.0595	.0521	.2188	54
7	.31095	.95042	.32717	.0565	.0522	.2159	53
8	.31123	.95033	.32749	.0535	.0523	.2131	52
9	.31150	.95024	.32782	.0505	.0524	.2102	51
10	0.31178	0.95015	0.32814	3.0475	1.0525	3.2074	50
11	.31206	.95006	.32846	.0445	.0526	.2045	49
12	.31233	.94997	.32878	.0415	.0527	.2017	48
13	.31261	.94988	.32910	.0385	.0528	.1989	47
14	.31289	.94979	.32943	.0356	.0529	.1960	46
15	0.31316	0.94970	0.32975	3.0326	1.0530	3.1932	45
16	.31344	.94961	.33007	.0296	.0531	.1904	44
17	.31372	.94952	.33039	.0267	.0532	.1876	43
18	.31399	.94942	.33072	.0237	.0533	.1848	42
19	.31427	.94933	.33101	.0208	.0534	.1820	41
20	0.31454	0.94924	0.33136	3.0178	1.0535	3.1792	40
21	.31482	.94915	.33169	.0149	.0536	.1764	39
22	.31510	.94906	.33201	.0120	.0537	.1736	38
23	.31537	.94897	.33233	.0090	.0538	.1708	37
24	.31565	.94888	.33265	.0061	.0539	.1681	36
25	0.31592	0.94878	0.33298	3.0032	1.0540	3.1653	35
26	.31620	.94869	.33330	.0003	.0541	.1625	34
27	.31648	.94860	.33362	2.9974	.0542	.1598	33
28	.31675	.94851	.33395	.9945	.0543	.1570	32
29	.31703	.94841	.33427	.9916	.0544	.1543	31
30	0.31730	0.94832	0.33459	2.9887	1.0545	3.1515	30
31	.31758	.94823	.33492	.9858	.0546	.1488	29
32	.31786	.94814	.33524	.9829	.0547	.1461	28
33	.31813	.94805	.33557	.9800	.0548	.1433	27
34	.31841	.94795	.33589	.9772	.0549	.1406	26
35	0.31868	0.94786	0.33621	2.9743	1.0550	3.1379	25
36	.31896	.94777	.33654	.9714	.0551	.1352	24
37	.31923	.94767	.33686	.9686	.0552	.1325	23
38	.31951	.94758	.33718	.9657	.0553	.1298	22
39	.31978	.94749	.33751	.9629	.0554	.1271	21
40	0.32006	0.94740	0.33783	2.9600	1.0555	3.1244	20
41	.32034	.94730	.33816	.9572	.0556	.1217	19
42	.32061	.94721	.33848	.9544	.0557	.1190	18
43	.32089	.94712	.33880	.9515	.0558	.1163	17
44	.32116	.94702	.33913	.9487	.0559	.1137	16
45	0.32144	0.94693	0.33945	2.9459	1.0560	3.1110	15
46	.32171	.94684	.33978	.9431	.0561	.1083	14
47	.32199	.94674	.34010	.9403	.0562	.1057	13
48	.32226	.94665	.34043	.9375	.0563	.1030	12
49	.32254	.94655	.34075	.9347	.0565	.1004	11
50	0.32282	0.94646	0.34108	2.9319	1.0566	3.0977	10
51	.32309	.94637	.34140	.9291	.0567	.0951	9
52	.32337	.94627	.34173	.9263	.0568	.0925	8
53	.32364	.94618	.34205	.9235	.0569	.0898	7
54	.32392	.94608	.34238	.9208	.0570	.0872	6
55	0.32419	0.94599	0.34270	2.9180	1.0571	3.0846	5
56	.32447	.94590	.34303	.9152	.0572	.0820	4
57	.32474	.94580	.34335	.9125	.0573	.0793	3
58	.32502	.94571	.34368	.9097	.0574	.0767	2
59	.32529	.94561	.34400	.9069	.0575	.0741	1
60	0.32557	0.94552	0.34433	2.9042	1.0576	3.0715	0
M	Cosine	Sine	Cotan.	Tan.	Cosec.	Secant	M

71°

19°

M	Sine	Cosine	Tan.	Cotan.	Secant	Cosec.	M
0	0.32557	0.94552	0.34433	2.9042	1.0576	3.0715	60
1	.32584	.94542	.34465	.9015	.0577	.0690	59
2	.32612	.94533	.34498	.8987	.0578	.0664	58
3	.32639	.94523	.34530	.8960	.0579	.0638	57
4	.32667	.94514	.34563	.8933	.0580	.0612	56
5	0.32694	0.94504	0.34595	2.8905	1.0581	3.0586	55
6	.32722	.94495	.34628	.8878	.0582	.0561	54
7	.32749	.94485	.34661	.8851	.0584	.0535	53
8	.32777	.94476	.34693	.8824	.0585	.0509	52
9	.32804	.94466	.34726	.8797	.0586	.0484	51
10	0.32832	0.94457	0.34758	2.8770	1.0587	3.0458	50
11	.32859	.94447	.34791	.8743	.0588	.0433	49
12	.32887	.94438	.34824	.8716	.0589	.0407	48
13	.32914	.94428	.34856	.8689	.0590	.0382	47
14	.32942	.94418	.34889	.8662	.0591	.0357	46
15	0.32969	0.94409	0.34921	2.8636	1.0592	3.0331	45
16	.32996	.94399	.34954	.8609	.0593	.0306	44
17	.33024	.94390	.34987	.8582	.0594	.0281	43
18	.33051	.94380	.35019	.8555	.0595	.0256	42
19	.33079	.94370	.35052	.8529	.0596	.0231	41
20	0.33106	0.94361	0.35085	2.8502	1.0598	3.0206	40
21	.33134	.94351	.35117	.8476	.0599	.0181	39
22	.33161	.94341	.35150	.8449	.0600	.0156	38
23	.33189	.94332	.35183	.8423	.0601	.0131	37
24	.33216	.94322	.35215	.8396	.0602	.0106	36
25	0.33243	0.94313	0.35248	2.8370	1.0603	3.0081	35
26	.33271	.94303	.35281	.8344	.0604	.0056	34
27	.33298	.94293	.35314	.8318	.0605	.0031	33
28	.33326	.94283	.35346	.8291	.0606	.0007	32
29	.33353	.94274	.35379	.8265	.0607	2.9982	31
30	0.33381	0.94264	0.35412	2.8239	1.0608	2.9957	30
31	.33408	.94254	.35445	.8213	.0609	.9933	29
32	.33435	.94245	.35477	.8187	.0611	.9908	28
33	.33463	.94235	.35510	.8161	.0612	.9884	27
34	.33490	.94225	.35543	.8135	.0613	.9859	26
35	0.33518	0.94215	0.35576	2.8109	1.0614	2.9835	25
36	.33545	.94206	.35608	.8083	.0615	.9810	24
37	.33572	.94196	.35641	.8057	.0616	.9786	23
38	.33600	.94186	.35674	.8032	.0617	.9762	22
39	.33627	.94176	.35707	.8006	.0618	.9738	21
40	0.33655	0.94167	0.35739	2.7980	1.0619	2.9713	20
41	.33682	.94157	.35772	.7954	.0620	.9689	19
42	.33709	.94147	.35805	.7929	.0622	.9665	18
43	.33737	.94137	.35838	.7903	.0623	.9641	17
44	.33764	.94127	.35871	.7878	.0624	.9617	16
45	0.33792	0.94118	0.35901	2.7852	1.0625	2.9593	15
46	.33819	.94108	.35936	.7827	.0626	.9569	14
47	.33846	.94098	.35969	.7801	.0627	.9545	13
48	.33874	.94088	.36002	.7776	.0628	.9521	12
49	.33901	.94078	.36035	.7751	.0629	.9497	11
50	0.33928	0.94068	0.36068	2.7725	1.0630	2.9474	10
51	.33956	.94058	.36101	.7700	.0632	.9450	9
52	.33983	.94049	.36134	.7675	.0633	.9426	8
53	.34011	.94039	.36167	.7650	.0634	.9402	7
54	.34038	.94029	.36199	.7625	.0635	.9379	6
55	0.34065	0.94019	0.36232	2.7600	1.0636	2.9355	5
56	.34093	.94009	.36265	.7575	.0637	.9332	4
57	.34120	.93999	.36298	.7550	.0638	.9308	3
58	.34147	.93989	.36331	.7525	.0639	.9285	2
59	.34175	.93979	.36364	.7500	.0641	.9261	1
60	0.34202	0.93969	0.36397	2.7475	1.0642	2.9238	0
M	Cosine	Sine	Cotan.	Tan.	Cosec.	Secant	M

70°

20°

M	Sine	Cosine	Tan.	Cotan.	Secant	Cosec.	M
0	0.34202	0.93969	0.36397	2.7475	1.0642	2.9238	60
1	.34229	.93959	.36430	.7450	.0643	.9215	59
2	.34257	.93949	.36463	.7425	.0644	.9191	58
3	.34284	.93939	.36496	.7400	.0645	.9168	57
4	.34311	.93929	.36529	.7376	.0646	.9145	56
5	0.34339	0.93919	0.36562	2.7351	1.0647	2.9122	55
6	.34366	.93909	.36595	.7326	.0648	.9098	54
7	.34393	.93899	.36628	.7302	.0650	.9075	53
8	.34421	.93889	.36661	.7277	.0651	.9052	52
9	.34448	.93879	.36694	.7252	.0652	.9029	51
10	0.34475	0.93869	0.36727	2.7228	1.0653	2.9006	50
11	.34502	.93859	.36760	.7204	.0654	.8983	49
12	.34530	.93849	.36793	.7179	.0655	.8960	48
13	.34557	.93839	.36826	.7155	.0656	.8937	47
14	.34584	.93829	.36859	.7130	.0658	.8915	46
15	0.34612	0.93819	0.36892	2.7106	1.0659	2.8892	45
16	.34639	.93809	.36925	.7082	.0660	.8869	44
17	.34666	.93799	.36958	.7058	.0661	.8846	43
18	.34693	.93789	.36991	.7033	.0662	.8824	42
19	.34721	.93779	.37024	.7009	.0663	.8801	41
20	0.34748	0.93769	0.37057	2.6985	1.0664	2.8778	40
21	.34775	.93758	.37090	.6961	.0666	.8756	39
22	.34803	.93748	.37123	.6937	.0667	.8733	38
23	.34830	.93738	.37156	.6913	.0668	.8711	37
24	.34857	.93728	.37190	.6889	.0669	.8688	36
25	0.34884	0.93718	0.37223	2.6865	1.0670	2.8666	35
26	.34912	.93708	.37256	.6841	.0671	.8644	34
27	.34939	.93698	.37289	.6817	.0673	.8621	33
28	.34966	.93687	.37322	.6794	.0674	.8599	32
29	.34993	.93677	.37355	.6770	.0675	.8577	31
30	0.35021	0.93667	0.37388	2.6746	1.0676	2.8554	30
31	.35048	.93657	.37422	.6722	.0677	.8532	29
32	.35075	.93647	.37455	.6699	.0678	.8510	28
33	.35102	.93637	.37488	.6675	.0679	.8488	27
34	.35130	.93626	.37521	.6652	.0681	.8466	26
35	0.35157	0.93616	0.37554	2.6628	1.0682	2.8444	25
36	.35184	.93606	.37587	.6604	.0683	.8422	24
37	.35211	.93596	.37621	.6581	.0684	.8400	23
38	.35239	.93585	.37654	.6558	.0685	.8378	22
39	.35266	.93575	.37687	.6534	.0686	.8356	21
40	0.35293	0.93565	0.37720	2.6511	1.0688	2.8334	20
41	.35320	.93555	.37754	.6487	.0689	.8312	19
42	.35347	.93544	.37787	.6464	.0690	.8290	18
43	.35375	.93534	.37820	.6441	.0691	.8269	17
44	.35402	.93524	.37853	.6418	.0692	.8247	16
45	0.35429	0.93513	0.37887	2.6394	1.0694	2.8225	15
46	.35456	.93503	.37920	.6371	.0695	.8204	14
47	.35483	.93493	.37953	.6348	.0696	.8182	13
48	.35511	.93482	.37986	.6325	.0697	.8160	12
49	.35538	.93472	.38020	.6302	.0698	.8139	11
50	0.35565	0.93462	0.38053	2.6279	1.0699	2.8117	10
51	.35592	.93451	.38086	.6256	.0701	.8096	9
52	.35619	.93441	.38120	.6233	.0702	.8074	8
53	.35647	.93431	.38153	.6210	.0703	.8053	7
54	.35674	.93420	.38186	.6187	.0704	.8032	6
55	0.35701	0.93410	0.38220	2.6164	1.0705	2.8010	5
56	.35728	.93400	.38253	.6142	.0707	.7989	4
57	.35755	.93389	.38286	.6119	.0708	.7968	3
58	.35782	.93379	.38320	.6096	.0709	.7947	2
59	.35810	.93368	.38353	.6073	.0710	.7925	1
60	0.35837	0.93358	0.38386	2.6051	1.0711	2.7904	0
M	Cosine	Sine	Cotan.	Tan.	Cosec.	Secant	M

69°

21°

M	Sine	Cosine	Tan.	Cotan.	Secant	Cosec.	M
0	0.35837	0.93358	0.38386	2.6051	1.0711	2.7904	60
1	.35864	.93348	.38420	.6028	.0713	.7883	59
2	.35891	.93337	.38453	.6006	.0714	.7862	58
3	.35918	.93327	.38486	.5983	.0715	.7841	57
4	.35945	.91316	.38520	.5960	.0716	.7820	56
5	0.35972	0.93306	0.38553	2.5938	1.0717	2.7799	55
6	.36000	.93295	.38587	.5916	.0719	.7778	54
7	.36027	.93285	.38620	.5893	.0720	.7757	53
8	.36054	.93274	.38654	.5871	.0721	.7736	52
9	.36081	.93264	.38687	.5848	.0722	.7715	51
10	0.36108	0.93253	0.38720	2.5826	1.0723	2.7694	50
11	.36135	.93243	.38754	.5804	.0725	.7674	49
12	.36162	.93232	.38787	.5781	.0726	.7653	48
13	.36189	.93222	.38821	.5759	.0727	.7632	47
14	.36217	.93211	.38854	.5737	.0728	.7611	46
15	0.36244	0.93201	0.38888	2.5715	1.0729	2.7591	45
16	.36271	.93190	.38921	.5693	.0731	.7570	44
17	.36298	.93180	.38955	.5671	.0732	.7550	43
18	.36325	.93169	.38988	.5649	.0733	.7529	42
19	.36352	.93158	.39022	.5627	.0734	.7509	41
20	0.36379	0.93148	0.39055	2.5605	1.0736	2.7488	40
21	.36406	.93137	.39089	.5583	.0737	.7468	39
22	.36433	.93127	.39122	.5561	.0738	.7447	38
23	.36460	.93116	.39156	.5539	.0739	.7427	37
24	.36488	.93105	.39189	.5517	.0740	.7406	36
25	0.36515	0.93095	0.39223	2.5495	1.0742	2.7386	35
26	.36542	.93084	.39257	.5473	.0743	.7366	34
27	.36569	.93074	.39290	.5451	.0744	.7346	33
28	.36596	.93063	.39324	.5430	.0745	.7325	32
29	.36623	.93052	.39357	.5408	.0747	.7305	31
30	0.36650	0.93042	0.39391	2.5386	1.0748	2.7285	30
31	.36677	.93031	.39425	.5365	.0749	.7265	29
32	.36704	.93020	.39458	.5343	.0750	.7245	28
33	.36731	.93010	.39492	.5322	.0751	.7225	27
34	.36758	.92999	.39525	.5300	.0753	.7205	26
35	0.36785	0.92988	0.39559	2.5278	1.0754	2.7185	25
36	.36812	.92978	.39593	.5257	.0755	.7165	24
37	.36839	.92967	.39626	.5236	.0756	.7145	23
38	.36866	.92956	.39660	.5214	.0758	.7125	22
39	.36893	.92945	.39694	.5193	.0759	.7105	21
40	0.36921	0.92935	0.39727	2.5171	1.0760	2.7085	20
41	.36948	.92924	.39761	.5150	.0761	.7065	19
42	.36975	.92913	.39795	.5129	.0763	.7045	18
43	.37002	.92902	.39828	.5108	.0764	.7026	17
44	.37029	.92892	.39862	.5086	.0765	.7006	16
45	0.37056	0.92881	0.39896	2.5065	1.0766	2.6986	15
46	.37083	.92870	.39930	.5044	.0768	.6967	14
47	.37110	.92859	.39963	.5023	.0769	.6947	13
48	.37137	.92848	.39997	.5002	.0770	.6927	12
49	.37164	.92838	.40031	.4981	.0771	.6908	11
50	0.37191	0.92827	0.40065	2.4960	1.0773	2.6888	10
51	.37218	.92816	.40098	.4939	.0774	.6869	9
52	.37245	.92805	.40132	.4918	.0775	.6849	8
53	.37272	.92794	.40166	.4897	.0776	.6830	7
54	.37299	.92784	.40200	.4876	.0778	.6810	6
55	0.37326	0.92773	0.40233	2.4855	1.0779	2.6791	5
56	.37353	.92762	.40267	.4834	.0780	.6772	4
57	.37380	.92751	.40301	.4813	.0781	.6752	3
58	.37407	.92740	.40335	.4792	.0783	.6733	2
59	.37434	.92729	.40369	.4772	.0784	.6714	1
60	0.37461	0.92718	0.40403	2.4751	1.0785	2.6695	0
M	Cosine	Sine	Cotan.	Tan.	Cosec.	Secant	M

68°

22°

M	Sine	Cosine	Tan.	Cotan.	Secant	Cosec.	M
0	0.37461	0.92718	0.40403	2.4751	1.0785	2.6695	60
1	.37488	.92707	.40436	.4730	.0787	.6675	59
2	.37514	.92696	.40470	.4709	.0788	.6656	58
3	.37541	.92686	.40504	.4689	.0789	.6637	57
4	.37568	.92675	.40538	.4668	.0790	.6618	56
5	0.37595	0.92664	0.40572	2.4647	1.0792	2.6599	55
6	.37622	.92653	.40606	.4627	.0793	.6580	54
7	.37649	.92642	.40640	.4606	.0794	.6561	53
8	.37676	.92631	.40673	.4586	.0795	.6542	52
9	.37703	.92620	.40707	.4565	.0797	.6523	51
10	0.37730	0.92609	0.40741	2.4545	1.0798	2.6504	50
11	.37757	.92598	.40775	.4525	.0799	.6485	49
12	.37784	.92587	.40809	.4504	.0801	.6466	48
13	.37811	.92576	.40843	.4484	.0802	.6447	47
14	.37838	.92565	.40877	.4463	.0803	.6428	46
15	0.37865	0.92554	0.40911	2.4443	1.0804	2.6410	45
16	.37892	.92543	.40945	.4423	.0806	.6391	44
17	.37919	.92532	.40979	.4403	.0807	.6372	43
18	.37946	.92521	.41013	.4382	.0808	.6353	42
19	.37972	.92510	.41047	.4362	.0810	.6335	41
20	0.37999	0.92499	0.41081	2.4342	1.0811	2.6316	40
21	.38026	.92488	.41115	.4322	.0812	.6297	39
22	.38053	.92477	.41149	.4302	.0813	.6279	38
23	.38080	.92466	.41183	.4282	.0815	.6260	37
24	.38107	.92455	.41217	.4262	.0816	.6242	36
25	0.38134	0.92443	0.41251	2.4242	1.0817	2.6223	35
26	.38161	.92432	.41285	.4222	.0819	.6205	34
27	.38188	.92421	.41319	.4202	.0820	.6186	33
28	.38214	.92410	.41353	.4182	.0821	.6168	32
29	.38241	.92399	.41387	.4162	.0823	.6150	31
30	0.38268	0.92388	0.41421	2.4142	1.0824	2.6131	30
31	.38295	.92377	.41455	.4122	.0825	.6113	29
32	.38322	.92366	.41489	.4102	.0826	.6095	28
33	.38349	.92354	.41524	.4083	.0828	.6076	27
34	.38376	.92343	.41558	.4063	.0829	.6058	26
35	0.38403	0.92332	0.41592	2.4043	1.0830	2.6040	25
36	.38429	.92321	.41626	.4023	.0832	.6022	24
37	.38456	.92310	.41660	.4004	.0833	.6003	23
38	.38483	.92299	.41694	.3984	.0834	.5985	22
39	.38510	.92287	.41728	.3964	.0836	.5967	21
40	0.38537	0.92276	0.41762	2.3945	1.0837	2.5949	20
41	.38564	.92265	.41797	.3925	.0838	.5931	19
42	.38591	.92254	.41831	.3906	.0840	.5913	18
43	.38617	.92242	.41865	.3886	.0841	.5895	17
44	.38644	.92231	.41899	.3867	.0842	.5877	16
45	0.38671	0.92220	0.41933	2.3847	1.0844	2.5859	15
46	.38698	.92209	.41968	.3828	.0845	.5841	14
47	.38725	.92197	.42002	.3808	.0846	.5823	13
48	.38751	.92186	.42036	.3789	.0847	.5805	12
49	.38778	.92175	.42070	.3770	.0849	.5787	11
50	0.38805	0.92164	0.42105	2.3750	1.0850	2.5770	10
51	.38832	.92152	.42139	.3731	.0851	.5752	9
52	.38859	.92141	.42173	.3712	.0853	.5734	8
53	.38886	.92130	.42207	.3692	.0854	.5716	7
54	.38912	.92118	.42242	.3673	.0855	.5699	6
55	0.38939	0.92107	0.42276	2.3654	1.0857	2.5681	5
56	.38966	.92096	.42310	.3635	.0858	.5663	4
57	.38993	.92084	.42344	.3616	.0859	.5646	3
58	.39019	.92073	.42379	.3597	.0861	.5628	2
59	.39046	.92062	.42413	.3577	.0862	.5610	1
60	0.39073	0.92050	0.42447	2.3558	1.0864	2.5593	0
M	Cosine	Sine	Cotan.	Tan.	Cosec.	Secant	M

67°

23°

M	Sine	Cosine	Tan.	Cotan.	Secant	Cosec.	M
0	0.39073	0.92050	0.42447	2.3558	1.0864	2.5593	60
1	.39100	.92039	.42482	.3539	.0865	.5575	59
2	.39126	.92028	.42516	.3520	.0866	.5558	58
3	.39153	.92016	.42550	.3501	.0868	.5540	57
4	.39180	.92005	.42585	.3482	.0869	.5523	56
5	0.39207	0.91993	0.42619	2.3463	1.0870	2.5506	55
6	.39234	.91982	.42654	.3445	.0872	.5488	54
7	.39260	.91971	.42688	.3426	.0873	.5471	53
8	.39287	.91959	.42722	.3407	.0874	.5453	52
9	.39314	.91948	.42757	.3388	.0876	.5436	51
10	0.39341	0.91936	0.42791	2.3369	1.0877	2.5419	50
11	.39367	.91925	.42826	.3350	.0878	.5402	49
12	.39394	.91913	.42860	.3332	.0880	.5384	48
13	.39421	.91902	.42894	.3313	.0881	.5367	47
14	.39448	.91891	.42929	.3294	.0882	.5350	46
15	0.39474	0.91879	0.42963	2.3276	1.0884	2.5333	45
16	.39501	.91868	.42998	.3257	.0885	.5316	44
17	.39528	.91856	.43032	.3238	.0886	.5299	43
18	.39554	.91845	.43067	.3220	.0888	.5281	42
19	.39581	.91833	.43101	.3201	.0889	.5264	41
20	0.39608	0.91822	0.43136	2.3183	1.0891	2.5247	40
21	.39635	.91810	.43170	.3164	.0892	.5230	39
22	.39661	.91798	.43205	.3145	.0893	.5213	38
23	.39688	.91787	.43239	.3127	.0895	.5196	37
24	.39715	.91775	.43274	.3109	.0896	.5179	36
25	0.39741	0.91764	0.43308	2.3090	1.0897	2.5163	35
26	.39768	.91752	.43343	.3072	.0899	.5146	34
27	.39795	.91741	.43377	.3053	.0900	.5129	33
28	.39821	.91729	.43412	.3035	.0902	.5112	32
29	.39848	.91718	.43447	.3017	.0903	.5095	31
30	0.39875	0.91706	0.43481	2.2998	1.0904	2.5078	30
31	.39901	.91694	.43516	.2980	.0906	.5062	29
32	.39928	.91683	.43550	.2962	.0907	.5045	28
33	.39955	.91671	.43585	.2944	.0908	.5028	27
34	.39981	.91659	.43620	.2925	.0910	.5011	26
35	0.40008	0.91648	0.43654	2.2907	1.0911	2.4995	25
36	.40035	.91636	.43689	.2889	.0913	.4978	24
37	.40061	.91625	.43723	.2871	.0914	.4961	23
38	.40088	.91613	.43758	.2853	.0915	.4945	22
39	.40115	.91601	.43793	.2835	.0917	.4928	21
40	0.40141	0.91590	0.43827	2.2817	1.0918	2.4912	20
41	.40168	.91578	.43862	.2799	.0920	.4895	19
42	.40195	.91566	.43897	.2781	.0921	.4879	18
43	.40221	.91554	.43932	.2763	.0922	.4862	17
44	.40248	.91543	.43966	.2745	.0924	.4846	16
45	0.40275	0.91531	0.44001	2.2727	1.0925	2.4829	15
46	.40301	.91519	.44036	.2709	.0927	.4813	14
47	.40328	.91508	.44070	.2691	.0928	.4797	13
48	.40354	.91496	.44105	.2673	.0929	.4780	12
49	.40381	.91484	.44140	.2655	.0931	.4764	11
50	0.40408	0.91472	0.44175	2.2637	1.0932	2.4748	10
51	.40434	.91461	.44209	.2619	.0934	.4731	9
52	.40461	.91449	.44244	.2602	.0935	.4715	8
53	.40487	.91437	.44279	.2584	.0936	.4699	7
54	.40514	.91425	.44314	.2566	.0938	.4683	6
55	0.40541	0.91414	0.44349	2.2548	1.0939	2.4666	5
56	.40567	.91402	.44383	.2531	.0941	.4650	4
57	.40594	.91390	.44418	.2513	.0942	.4634	3
58	.40620	.91378	.44453	.2495	.0943	.4618	2
59	.40647	.91366	.44488	.2478	.0945	.4602	1
60	0.40674	0.91354	0.44523	2.2460	1.0946	2.4586	0
M	Cosine	Sine	Cotan.	Tan.	Cosec.	Secant	M

66°

TABLES OF NATURAL TRIGONOMETRIC FUNCTIONS

24°

M	Sine	Cosine	Tan.	Cotan.	Secant	Cosec.	M
0	0.40674	0.91354	0.44523	2.2460	1.0946	2.4586	60
1	.40700	.91343	.44558	.2443	.0948	.4570	59
2	.40727	.91331	.44593	.2425	.0949	.4554	58
3	.40753	.91319	.44627	.2408	.0951	.4538	57
4	.40780	.91307	.44662	.2390	.0952	.4522	56
5	0.40806	0.91295	0.44697	2.2373	1.0953	2.4506	55
6	.40833	.91283	.44732	.2355	.0955	.4490	54
7	.40860	.91271	.44767	.2338	.0956	.4474	53
8	.40886	.91260	.44802	.2320	.0958	.4458	52
9	.40913	.91248	.44837	.2303	.0959	.4442	51
10	0.40939	0.91236	0.44872	2.2286	1.0961	2.4426	50
11	.40966	.91224	.44907	.2268	.0962	.4411	49
12	.40992	.91212	.44942	.2251	.0963	.4395	48
13	.41019	.91200	.44977	.2234	.0965	.4379	47
14	.41045	.91188	.45012	.2216	.0966	.4363	46
15	0.41072	0.91176	0.45047	2.2199	1.0968	2.4347	45
16	.41098	.91164	.45082	.2182	.0969	.4332	44
17	.41125	.91152	.45117	.2165	.0971	.4316	43
18	.41151	.91140	.45152	.2147	.0972	.4300	42
19	.41178	.91128	.45187	.2130	.0973	.4285	41
20	0.41204	0.91116	0.45222	2.2113	1.0975	2.4269	40
21	.41231	.91104	.45257	.2096	.0976	.4254	39
22	.41257	.91092	.45292	.2079	.0978	.4238	38
23	.41284	.91080	.45327	.2062	.0979	.4222	37
24	.41310	.91068	.45362	.2045	.0981	.4207	36
25	0.41337	0.91056	0.45397	2.2028	1.0982	2.4191	35
26	.41363	.91044	.45432	.2011	.0984	.4176	34
27	.41390	.91032	.45467	.1994	.0985	.4160	33
28	.41416	.91020	.45502	.1977	.0986	.4145	32
29	.41443	.91008	.45537	.1960	.0988	.4130	31
30	0.41469	0.90996	0.45573	2.1943	1.0989	2.4114	30
31	.41496	.90984	.45608	.1926	.0991	.4099	29
32	.41522	.90972	.45643	.1909	.0992	.4083	28
33	.41549	.90960	.45678	.1892	.0994	.4068	27
34	.41575	.90948	.45713	.1875	.0995	.4053	26
35	0.41602	0.90936	0.45748	2.1859	1.0997	2.4037	25
36	.41628	.90924	.45783	.1842	.0998	.4022	24
37	.41654	.90911	.45819	.1825	.1000	.4007	23
38	.41681	.90899	.45854	.1808	.1001	.3992	22
39	.41707	.90887	.45889	.1792	.1003	.3976	21
40	0.41734	0.90875	0.45924	2.1775	1.1004	2.3961	20
41	.41760	.90863	.45960	.1758	.1005	.3946	19
42	.41787	.90851	.45995	.1741	.1007	.3931	18
43	.41813	.90839	.46030	.1725	.1008	.3916	17
44	.41839	.90826	.46065	.1708	.1010	.3901	16
45	0.41866	0.90814	0.46101	2.1692	1.1011	2.3886	15
46	.41892	.90802	.46136	.1675	.1013	.3871	14
47	.41919	.90790	.46171	.1658	.1014	.3856	13
48	.41945	.90778	.46206	.1642	.1016	.3841	12
49	.41972	.90765	.46242	.1625	.1017	.3826	11
50	0.41998	0.90753	0.46277	2.1609	1.1019	2.3811	10
51	.42024	.90741	.46312	.1592	.1020	.3796	9
52	.42051	.90729	.46348	.1576	.1022	.3781	8
53	.42077	.90717	.46383	.1559	.1023	.3766	7
54	.42103	.90704	.46418	.1543	.1025	.3751	6
55	0.42130	0.90692	0.46454	2.1527	1.1026	2.3736	5
56	.42156	.90680	.46489	.1510	.1028	.3721	4
57	.42183	.90668	.46524	.1494	.1029	.3706	3
58	.42209	.90655	.46560	.1478	.1031	.3691	2
59	.42235	.90643	.46595	.1461	.1032	.3677	1
60	0.42262	0.90631	0.46631	2.1445	1.1034	2.3662	0
M	Cosine	Sine	Cotan.	Tan.	Cosec.	Secant	M

65°

25°

M	Sine	Cosine	Tan.	Cotan.	Secant	Cosec.	M
0	0.42262	0.90631	0.46631	2.1445	1.1034	2.3662	60
1	.42288	.90618	.46666	.1429	.1035	.3647	59
2	.42314	.90606	.46702	.1412	.1037	.3632	58
3	.42341	.90594	.46737	.1396	.1038	.3618	57
4	.42367	.90582	.46772	.1380	.1040	.3603	56
5	0.42394	0.90569	0.46808	2.1364	1.1041	2.3588	55
6	.42420	.90557	.46843	.1348	.1043	.3574	54
7	.42446	.90544	.46879	.1331	.1044	.3559	53
8	.42473	.90532	.46914	.1315	.1046	.3544	52
9	.42499	.90520	.46950	.1299	.1047	.3530	51
10	0.42525	0.90507	0.46985	2.1283	1.1049	2.3515	50
11	.42552	.90495	.47021	.1267	.1050	.3501	49
12	.42578	.90483	.47056	.1251	.1052	.3486	48
13	.42604	.90470	.47092	.1235	.1053	.3472	47
14	.42630	.90458	.47127	.1219	.1055	.3457	46
15	0.42657	0.90445	0.47163	2.1203	1.1056	2.3443	45
16	.42683	.90433	.47199	.1187	.1058	.3428	44
17	.42709	.90421	.47234	.1171	.1059	.3414	43
18	.42736	.90408	.47270	.1155	.1061	.3399	42
19	.42762	.90396	.47305	.1139	.1062	.3385	41
20	0.42788	0.90383	0.47341	2.1123	1.1064	2.3371	40
21	.42815	.90371	.47376	.1107	.1065	.3356	39
22	.42841	.90358	.47412	.1092	.1067	.3342	38
23	.42867	.90346	.47448	.1076	.1068	.3328	37
24	.42893	.90333	.47483	.1060	.1070	.3313	36
25	0.42920	0.90321	0.47519	2.1044	1.1072	2.3299	35
26	.42946	.90308	.47555	.1028	.1073	.3285	34
27	.42972	.90296	.47590	.1013	.1075	.3271	33
28	.42998	.90283	.47626	.0997	.1076	.3256	32
29	.43025	.90271	.47662	.0981	.1078	.3242	31
30	0.43051	0.90258	0.47697	2.0965	1.1079	2.3228	30
31	.43077	.90246	.47733	.0950	.1081	.3214	29
32	.43104	.90233	.47769	.0934	.1082	.3200	28
33	.43130	.90221	.47805	.0918	.1084	.3186	27
34	.43156	.90208	.47840	.0903	.1085	.3172	26
35	0.43182	0.90196	0.47876	2.0887	1.1087	2.3158	25
36	.43208	.90183	.47912	.0872	.1088	.3143	24
37	.43235	.90171	.47948	.0856	.1090	.3129	23
38	.43261	.90158	.47983	.0840	.1092	.3115	22
39	.43287	.90145	.48019	.0825	.1093	.3101	21
40	0.43313	0.90133	0.48055	2.0809	1.1095	2.3087	20
41	.43340	.90120	.48091	.0794	.1096	.3073	19
42	.43366	.90108	.48127	.0778	.1098	.3059	18
43	.43392	.90095	.48162	.0763	.1099	.3046	17
44	.43418	.90082	.48198	.0747	.1101	.3032	16
45	0.43444	0.90070	0.48234	2.0732	1.1102	2.3018	15
46	.43471	.90057	.48270	.0717	.1104	.3004	14
47	.43497	.90044	.48306	.0701	.1106	.2990	13
48	.43523	.90032	.48342	.0686	.1107	.2976	12
49	.43549	.90019	.48378	.0671	.1109	.2962	11
50	0.43575	0.90006	0.48414	2.0655	1.1110	2.2949	10
51	.43602	.89994	.48449	.0640	.1112	.2935	9
52	.43628	.89981	.48485	.0625	.1113	.2921	8
53	.43654	.89968	.48521	.0609	.1115	.2907	7
54	.43680	.89956	.48557	.0594	.1116	.2894	6
55	0.43706	0.89943	0.48593	2.0579	1.1118	2.2880	5
56	.43732	.89930	.48629	.0564	.1120	.2866	4
57	.43759	.89918	.48665	.0548	.1121	.2853	3
58	.43785	.89905	.48701	.0533	.1123	.2839	2
59	.43811	.89892	.48737	.0518	.1124	.2825	1
60	0.43837	0.89879	0.48773	2.0503	1.1126	2.2812	0
M	Cosine	Sine	Cotan.	Tan.	Cosec.	Secant	M

64°

26°

M	Sine	Cosine	Tan.	Cotan.	Secant	Cosec.	M
0	0.43837	0.89879	0.48773	2.0503	1.1126	2.2812	60
1	.43863	.89867	.48809	.0488	.1127	.2798	59
2	.43889	.89854	.48845	.0473	.1129	.2784	58
3	.43915	.89841	.48881	.0458	.1131	.2771	57
4	.43942	.89828	.48917	.0443	.1132	.2757	56
5	0.43968	0.89815	0.48953	2.0427	1.1134	2.2744	55
6	.43994	.89803	.48989	.0412	.1135	.2730	54
7	.44020	.89790	.49025	.0397	.1137	.2717	53
8	.44046	.89777	.49062	.0382	.1139	.2703	52
9	.44072	.89764	.49098	.0367	.1140	.2690	51
10	0.44098	0.89751	0.49134	2.0352	1.1142	2.2676	50
11	.44124	.89739	.49170	.0338	.1143	.2663	49
12	.44150	.89726	.49206	.0323	.1145	.2650	48
13	.44177	.89713	.49242	.0308	.1147	.2636	47
14	.44203	.89700	.49278	.0293	.1148	.2623	46
15	0.44229	0.89687	0.49314	2.0278	1.1150	2.2610	45
16	.44255	.89674	.49351	.0263	.1151	.2596	44
17	.44281	.89661	.49387	.0248	.1153	.2583	43
18	.44307	.89649	.49423	.0233	.1155	.2570	42
19	.44333	.89636	.49459	.0219	.1156	.2556	41
20	0.44359	0.89623	0.49495	2.0204	1.1158	2.2543	40
21	.44385	.89610	.49532	.0189	.1159	.2530	39
22	.44411	.89597	.49568	.0174	.1161	.2517	38
23	.44437	.89584	.49604	.0159	.1163	.2503	37
24	.44463	.89571	.49640	.0145	.1164	.2490	36
25	0.44489	0.89558	0.49677	2.0130	1.1166	2.2477	35
26	.44516	.89545	.49713	.0115	.1167	.2464	34
27	.44542	.89532	.49749	.0101	.1169	.2451	33
28	.44568	.89519	.49785	.0086	.1171	.2438	32
29	.44594	.89506	.49822	.0071	.1172	.2425	31
30	0.44620	0.89493	0.49858	2.0057	1.1174	2.2411	30
31	.44646	.89480	.49894	.0042	.1176	.2398	29
32	.44672	.89467	.49931	.0028	.1177	.2385	28
33	.44698	.89454	.49967	.0013	.1179	.2372	27
34	.44724	.89441	.50003	1.9998	.1180	.2359	26
35	0.44750	0.89428	0.50040	1.9984	1.1182	2.2346	25
36	.44776	.89415	.50076	.9969	.1184	.2333	24
37	.44802	.89402	.50113	.9955	.1185	.2320	23
38	.44828	.89389	.50149	.9940	.1187	.2307	22
39	.44854	.89376	.50185	.9926	.1189	.2294	21
40	0.44880	0.89363	0.50222	1.9912	1.1190	2.2282	20
41	.44906	.89350	.50258	.9897	.1192	.2269	19
42	.44932	.89337	.50295	.9883	.1193	.2256	18
43	.44958	.89324	.50331	.9868	.1195	.2243	17
44	.44984	.89311	.50368	.9854	.1197	.2230	16
45	0.45010	0.89298	0.50404	1.9840	1.1198	2.2217	15
46	.45036	.89285	.50441	.9825	.1200	.2204	14
47	.45062	.89272	.50477	.9811	.1202	.2192	13
48	.45088	.89258	.50514	.9797	.1203	.2179	12
49	.45114	.89245	.50550	.9782	.1205	.2166	11
50	0.45140	0.89232	0.50587	1.9768	1.1207	2.2153	10
51	.45166	.89219	.50623	.9754	.1208	.2141	9
52	.45191	.89206	.50660	.9739	.1210	.2128	8
53	.45217	.89193	.50696	.9725	.1212	.2115	7
54	.45243	.89180	.50733	.9711	.1213	.2103	6
55	0.45269	0.89166	0.50769	1.9697	1.1215	2.2090	5
56	.45295	.89153	.50806	.9683	.1217	.2077	4
57	.45321	.89140	.50843	.9668	.1218	.2065	3
58	.45347	.89127	.50879	.9654	.1220	.2052	2
59	.45373	.89114	.50916	.9640	.1222	.2039	1
60	0.45399	0.89101	0.50952	1.9626	1.1223	2.2027	0
M	Cosine	Sine	Cotan.	Tan.	Cosec.	Secant	M

63°

27°

M	Sine	Cosine	Tan.	Cotan.	Secant	Cosec.	M
0	0.45399	0.89101	0.50952	1.9626	1.1223	2.2027	60
1	.45425	.89087	.50989	.9612	.1225	.2014	59
2	.45451	.89074	.51026	.9598	.1226	.2002	58
3	.45477	.89061	.51062	.9584	.1228	.1989	57
4	.45503	.89048	.51099	.9570	.1230	.1977	56
5	0.45528	0.89034	0.51136	1.9556	1.1231	2.1964	55
6	.45554	.89021	.51172	.9542	.1233	.1952	54
7	.45580	.89008	.51209	.9528	.1235	.1939	53
8	.45606	.88995	.51246	.9514	.1237	.1927	52
9	.45632	.88981	.51283	.9500	.1238	.1914	51
10	0.45658	0.88968	0.51319	1.9486	1.1240	2.1902	50
11	.45684	.88955	.51356	.9472	.1242	.1889	49
12	.45710	.88942	.51393	.9458	.1243	.1877	48
13	.45736	.88928	.51430	.9444	.1245	.1865	47
14	.45761	.88915	.51466	.9430	.1247	.1852	46
15	0.45787	0.88902	0.51503	1.9416	1.1248	2.1840	45
16	.45813	.88888	.51540	.9402	.1250	.1828	44
17	.45839	.88875	.51577	.9388	.1252	.1815	43
18	.45865	.88862	.51614	.9375	.1253	.1803	42
19	.45891	.88848	.51651	.9361	.1255	.1791	41
20	0.45917	0.88835	0.51687	1.9347	1.1257	2.1778	40
21	.45942	.88822	.51724	.9333	.1258	.1766	39
22	.45968	.88808	.51761	.9319	.1260	.1754	38
23	.45994	.88795	.51798	.9306	.1262	.1742	37
24	.46020	.88781	.51835	.9292	.1264	.1730	36
25	0.46046	0.88768	0.51872	1.9278	1.1265	2.1717	35
26	.46072	.88755	.51909	.9264	.1267	.1705	34
27	.46097	.88741	.51946	.9251	.1269	.1693	33
28	.46123	.88728	.51983	.9237	.1270	.1681	32
29	.46149	.88714	.52020	.9223	.1272	.1669	31
30	0.46175	0.88701	0.52057	1.9210	1.1274	2.1657	30
31	.46201	.88688	.52094	.9196	.1275	.1645	29
32	.46226	.88674	.52131	.9182	.1277	.1633	28
33	.46252	.88661	.52168	.9169	.1279	.1620	27
34	.46278	.88647	.52205	.9155	.1281	.1608	26
35	0.46304	0.88634	0.52242	1.9142	1.1282	2.1596	25
36	.46330	.88620	.52279	.9128	.1284	.1584	24
37	.46355	.88607	.52316	.9115	.1286	.1572	23
38	.46381	.88593	.52353	.9101	.1287	.1560	22
39	.46407	.88580	.52390	.9088	.1289	.1548	21
40	0.46433	0.88566	0.52427	1.9074	1.1291	2.1536	20
41	.46458	.88553	.52464	.9061	.1293	.1525	19
42	.46484	.88539	.52501	.9047	.1294	.1513	18
43	.46510	.88526	.52538	.9034	.1296	.1501	17
44	.46536	.88512	.52575	.9020	.1298	.1489	16
45	0.46561	0.88499	0.52612	1.9007	1.1299	2.1477	15
46	.46587	.88485	.52650	.8993	.1301	.1465	14
47	.46613	.88472	.52687	.8980	.1303	.1453	13
48	.46639	.88458	.52724	.8967	.1305	.1441	12
49	.46664	.88444	.52761	.8953	.1306	.1430	11
50	0.46690	0.88431	0.52798	1.8940	1.1308	2.1418	10
51	.46716	.88417	.52836	.8927	.1310	.1406	9
52	.46741	.88404	.52873	.8913	.1312	.1394	8
53	.46767	.88390	.52910	.8900	.1313	.1382	7
54	.46793	.88376	.52947	.8887	.1315	.1371	6
55	0.46819	0.88363	0.52984	1.8873	1.1317	2.1359	5
56	.46844	.88349	.53022	.8860	.1319	.1347	4
57	.46870	.88336	.53059	.8847	.1320	.1335	3
58	.46896	.88322	.53096	.8834	.1322	.1324	2
59	.46921	.88308	.53134	.8820	.1324	.1312	1
60	0.46947	0.88295	0.53171	1.8807	1.1326	2.1300	0
M	Cosine	Sine	Cotan.	Tan.	Cosec.	Secant	M

63°

28°

M	Sine	Cosine	Tan.	Cotan.	Secant	Cosec.	M
0	0.46947	0.88295	0.53171	1.8807	1.1326	2.1300	60
1	.46973	.88281	.53208	.8794	.1327	.1289	59
2	.46998	.88267	.53245	.8781	.1329	.1277	58
3	.47024	.88254	.53283	.8768	.1331	.1266	57
4	.47050	.88240	.53320	.8754	.1333	.1254	56
5	0.47075	0.88226	0.53358	1.8741	1.1334	2.1242	55
6	.47101	.88213	.53395	.8728	.1336	.1231	54
7	.47127	.88199	.53432	.8715	.1338	.1219	53
8	.47152	.88185	.53470	.8702	.1340	.1208	52
9	.47178	.88171	.53507	.8689	.1341	.1196	51
10	0.47204	0.88158	0.53545	1.8676	1.1343	2.1185	50
11	.47229	.88144	.53582	.8663	.1345	.1173	49
12	.47255	.88130	.53619	.8650	.1347	.1162	48
13	.47281	.88117	.53657	.8637	.1349	.1150	47
14	.47306	.88103	.53694	.8624	.1350	.1139	46
15	0.47332	0.88089	0.53732	1.8611	1.1352	2.1127	45
16	.47357	.88075	.53769	.8598	.1354	.1116	44
17	.47383	.88061	.53807	.8585	.1356	.1104	43
18	.47409	.88048	.53844	.8572	.1357	.1093	42
19	.47434	.88034	.53882	.8559	.1359	.1082	41
20	0.47460	0.88020	0.53919	1.8546	1.1361	2.1070	40
21	.47486	.88006	.53957	.8533	.1363	.1059	39
22	.47511	.87992	.53995	.8520	.1365	.1048	38
23	.47537	.87979	.54032	.8507	.1366	.1036	37
24	.47562	.87965	.54070	.8495	.1368	.1025	36
25	0.47588	0.87951	0.54107	1.8482	1.1370	2.1014	35
26	.47613	.87937	.54145	.8469	.1372	.1002	34
27	.47639	.87923	.54183	.8456	.1373	.0991	33
28	.47665	.87909	.54220	.8443	.1375	.0980	32
29	.47690	.87895	.54258	.8430	.1377	.0969	31
30	0.47716	0.87882	0.54295	1.8418	1.1379	2.0957	30
31	.47741	.87868	.54333	.8405	.1381	.0946	29
32	.47767	.87854	.54371	.8392	.1382	.0935	28
33	.47792	.87840	.54409	.8379	.1384	.0924	27
34	.47818	.87826	.54446	.8367	.1386	.0912	26
35	0.47844	0.87812	0.54484	1.8354	1.1388	2.0901	25
36	.47869	.87798	.54522	.8341	.1390	.0890	24
37	.47895	.87784	.54559	.8329	.1391	.0879	23
38	.47920	.87770	.54597	.8316	.1393	.0868	22
39	.47946	.87756	.54635	.8303	.1395	.0857	21
40	0.47971	0.87742	0.54673	1.8291	1.1397	2.0846	20
41	.47997	.87728	.54711	.8278	.1399	.0835	19
42	.48022	.87715	.54748	.8265	.1401	.0824	18
43	.48048	.87701	.54786	.8253	.1402	.0812	17
44	.48073	.87687	.54824	.8240	.1404	.0801	16
45	0.48099	0.87673	0.54862	1.8227	1.1406	2.0790	15
46	.48124	.87659	.54900	.8215	.1408	.0779	14
47	.48150	.87645	.54937	.8202	.1410	.0768	13
48	.48175	.87631	.54975	.8190	.1411	.0757	12
49	.48201	.87617	.55013	.8177	.1413	.0746	11
50	0.48226	0.87603	0.55051	1.8165	1.1415	2.0735	10
51	.48252	.87588	.55089	.8152	.1417	.0725	9
52	.48277	.87574	.55127	.8140	.1419	.0714	8
53	.48303	.87560	.55165	.8127	.1421	.0703	7
54	.48328	.87546	.55203	.8115	.1422	.0692	6
55	0.48354	0.87532	0.55241	1.8102	1.1424	2.0681	5
56	.48379	.87518	.55279	.8090	.1426	.0670	4
57	.48405	.87504	.55317	.8078	.1428	.0659	3
58	.48430	.87490	.55355	.8065	.1430	.0648	2
59	.48455	.87476	.55393	.8053	.1432	.0637	1
60	0.48481	0.87462	0.55431	1.8040	1.1433	2.0627	0
M	Cosine	Sine	Cotan.	Tan.	Cosec.	Secant	M

62°

29°

M	Sine	Cosine	Tan.	Cotan.	Secant	Cosec.	M
0	0.48481	0.87462	0.55431	1.8040	1.1433	2.0627	60
1	.48506	.87448	.55469	.8028	.1435	.0616	59
2	.48532	.87434	.55507	.8016	.1437	.0605	58
3	.48557	.87420	.55545	.8003	.1439	.0594	57
4	.48583	.87405	.55583	.7991	.1441	.0583	56
5	0.48608	0.87391	0.55621	1.7979	1.1443	2.0573	55
6	.48633	.87377	.55659	.7966	.1445	.0562	54
7	.48659	.87363	.55697	.7954	.1446	.0551	53
8	.48684	.87349	.55735	.7942	.1448	.0540	52
9	.48710	.87335	.55774	.7930	.1450	.0530	51
10	0.48735	0.87320	0.55812	1.7917	1.1452	2.0519	50
11	.48760	.87306	.55850	.7905	.1454	.0508	49
12	.48786	.87292	.55888	.7893	.1456	.0498	48
13	.48811	.87278	.55926	.7881	.1458	.0487	47
14	.48837	.87264	.55964	.7868	.1459	.0476	46
15	0.48862	0.87250	0.56003	1.7856	1.1461	2.0466	45
16	.48887	.87235	.56041	.7844	.1463	.0455	44
17	.48913	.87221	.56079	.7832	.1465	.0444	43
18	.48938	.87207	.56117	.7820	.1467	.0434	42
19	.48964	.87193	.56156	.7808	.1469	.0423	41
20	0.48989	0.87178	0.56194	1.7795	1.1471	2.0413	40
21	.49014	.87164	.56232	.7783	.1473	.0402	39
22	.49040	.87150	.56270	.7771	.1474	.0392	38
23	.49065	.87136	.56309	.7759	.1476	.0381	37
24	.49090	.87121	.56347	.7747	.1478	.0370	36
25	0.49116	0.87107	0.56385	1.7735	1.1480	2.0360	35
26	.49141	.87093	.56424	.7723	.1482	.0349	34
27	.49166	.87078	.56462	.7711	.1484	.0339	33
28	.49192	.87064	.56500	.7699	.1486	.0329	32
29	.49217	.87050	.56539	.7687	.1488	.0318	31
30	0.49242	0.87035	0.56577	1.7675	1.1489	2.0308	30
31	.49268	.87021	.56616	.7663	.1491	.0297	29
32	.49293	.87007	.56654	.7651	.1493	.0287	28
33	.49318	.86992	.56693	.7639	.1495	.0276	27
34	.49343	.86978	.56731	.7627	.1497	.0266	26
35	0.49369	0.86964	0.56769	1.7615	1.1499	2.0256	25
36	.49394	.86949	.56808	.7603	.1501	.0245	24
37	.49419	.86935	.56846	.7591	.1503	.0235	23
38	.49445	.86921	.56885	.7579	.1505	.0224	22
39	.49470	.86906	.56923	.7567	.1507	.0214	21
40	0.49495	0.86892	0.56962	1.7555	1.1508	2.0204	20
41	.49521	.86877	.57000	.7544	.1510	.0194	19
42	.49546	.86863	.57039	.7532	.1512	.0183	18
43	.49571	.86849	.57077	.7520	.1514	.0173	17
44	.49596	.86834	.57116	.7508	.1516	.0163	16
45	0.49622	0.86820	0.57155	1.7496	1.1518	2.0152	15
46	.49647	.86805	.57193	.7484	.1520	.0142	14
47	.49672	.86791	.57232	.7473	.1522	.0132	13
48	.49697	.86776	.57270	.7461	.1524	.0122	12
49	.49723	.86762	.57309	.7449	.1526	.0111	11
50	0.49748	0.86748	0.57348	1.7437	1.1528	2.0101	10
51	.49773	.86733	.57386	.7426	.1530	.0091	9
52	.49798	.86719	.57425	.7414	.1531	.0081	8
53	.49823	.86704	.57464	.7402	.1533	.0071	7
54	.49849	.86690	.57502	.7390	.1535	.0061	6
55	0.49874	0.86675	0.57541	1.7379	1.1537	2.0050	5
56	.49899	.86661	.57580	.7367	.1539	.0040	4
57	.49924	.86646	.57619	.7355	.1541	.0030	3
58	.49950	.86632	.57657	.7344	.1543	.0020	2
59	.49975	.86617	.57696	.7332	.1545	.0010	1
60	0.50000	0.86603	0.57735	1.7320	1.1547	2.0000	0
M	Cosine	Sine	Cotan.	Tan.	Cosec.	Secant	M

61°

TABLES OF NATURAL TRIGONOMETRIC FUNCTIONS

30°

M	Sine	Cosine	Tan.	Cotan.	Secant	Cosec.	M
0	0.50000	0.86603	0.57735	1.7320	1.1547	2.0000	60
1	.50025	.86588	.57774	.7309	.1549	1.9990	59
2	.50050	.86573	.57813	.7297	.1551	.9980	58
3	.50075	.86559	.57851	.7286	.1553	.9970	57
4	.50101	.86544	.57890	.7274	.1555	.9960	56
5	0.50126	0.86530	0.57929	1.7262	1.1557	1.9950	55
6	.50151	.86515	.57968	.7251	.1559	.9940	54
7	.50176	.86500	.58007	.7239	.1561	.9930	53
8	.50201	.86486	.58046	.7228	.1562	.9920	52
9	.50226	.86471	.58085	.7216	.1564	.9910	51
10	0.50252	0.86457	0.58123	1.7205	1.1566	1.9900	50
11	.50277	.86442	.58162	.7193	.1568	.9890	49
12	.50302	.86427	.58201	.7182	.1570	.9880	48
13	.50327	.86413	.58240	.7170	.1572	.9870	47
14	.50352	.86398	.58279	.7159	.1574	.9860	46
15	0.50377	0.86383	0.58318	1.7147	1.1576	1.9850	45
16	.50402	.86369	.58357	.7136	.1578	.9840	44
17	.50428	.86354	.58396	.7124	.1580	.9830	43
18	.50453	.86339	.58435	.7113	.1582	.9820	42
19	.50478	.86325	.58474	.7101	.1584	.9811	41
20	0.50503	0.86310	0.58513	1.7090	1.1586	1.9801	40
21	.50528	.86295	.58552	.7079	.1588	.9791	39
22	.50553	.86281	.58591	.7067	.1590	.9781	38
23	.50578	.86266	.58630	.7056	.1592	.9771	37
24	.50603	.86251	.58670	.7044	.1594	.9761	36
25	0.50628	0.86237	0.58709	1.7033	1.1596	1.9752	35
26	.50653	.86222	.58748	.7022	.1598	.9742	34
27	.50679	.86207	.58787	.7010	.1600	.9732	33
28	.50704	.86192	.58826	.6999	.1602	.9722	32
29	.50729	.86178	.58865	.6988	.1604	.9713	31
30	0.50754	0.86163	0.58904	1.6977	1.1606	1.9703	30
31	.50779	.86148	.58944	.6965	.1608	.9693	29
32	.50804	.86133	.58983	.6954	.1610	.9683	28
33	.50829	.86118	.59022	.6943	.1612	.9674	27
34	.50854	.86104	.59061	.6931	.1614	.9664	26
35	0.50879	0.86089	0.59100	1.6920	1.1616	1.9654	25
36	.50904	.86074	.59140	.6909	.1618	.9645	24
37	.50929	.86059	.59179	.6898	.1620	.9635	23
38	.50954	.86044	.59218	.6887	.1622	.9625	22
39	.50979	.86030	.59258	.6875	.1624	.9616	21
40	0.51004	0.86015	0.59297	1.6864	1.1626	1.9606	20
41	.51029	.86000	.59336	.6853	.1628	.9596	19
42	.51054	.85985	.59376	.6842	.1630	.9587	18
43	.51079	.85970	.59415	.6831	.1632	.9577	17
44	.51104	.85955	.59454	.6820	.1634	.9568	16
45	0.51129	0.85941	0.59494	1.6808	1.1636	1.9558	15
46	.51154	.85926	.59533	.6797	.1638	.9549	14
47	.51179	.85911	.59572	.6786	.1640	.9539	13
48	.51204	.85896	.59612	.6775	.1642	.9530	12
49	.51229	.85881	.59651	.6764	.1644	.9520	11
50	0.51254	0.85866	0.59691	1.6753	1.1646	1.9510	10
51	.51279	.85851	.59730	.6742	.1648	.9501	9
52	.51304	.85836	.59770	.6731	.1650	.9491	8
53	.51329	.85821	.59809	.6720	.1652	.9482	7
54	.51354	.85806	.59849	.6709	.1654	.9473	6
55	0.51379	0.85791	0.59888	1.6698	1.1656	1.9463	5
56	.51404	.85777	.59928	.6687	.1658	.9454	4
57	.51429	.85762	.59967	.6676	.1660	.9444	3
58	.51454	.85747	.60007	.6665	.1662	.9435	2
59	.51479	.85732	.60046	.6654	.1664	.9425	1
60	0.51504	0.85717	0.60086	1.6643	1.1666	1.9416	0
M	Cosine	Sine	Cotan.	Tan.	Cosec.	Secant	M

31°

M	Sine	Cosine	Tan.	Cotan.	Secant	Cosec.	M
0	0.51504	0.85717	0.60086	1.6643	1.1666	1.9416	60
1	.51529	.85702	.60126	.6632	.1668	.9407	59
2	.51554	.85687	.60165	.6621	.1670	.9397	58
3	.51578	.85672	.60205	.6610	.1672	.9388	57
4	.51603	.85657	.60244	.6599	.1674	.9378	56
5	0.51628	0.85642	0.60284	1.6588	1.1676	1.9369	55
6	.51653	.85627	.60324	.6577	.1678	.9360	54
7	.51678	.85612	.60363	.6566	.1681	.9350	53
8	.51703	.85597	.60403	.6555	.1683	.9341	52
9	.51728	.85582	.60443	.6544	.1685	.9332	51
10	0.51753	0.85566	0.60483	1.6534	1.1687	1.9322	50
11	.51778	.85551	.60522	.6523	.1689	.9313	49
12	.51803	.85536	.60562	.6512	.1691	.9304	48
13	.51827	.85521	.60602	.6501	.1693	.9295	47
14	.51852	.85506	.60642	.6490	.1695	.9285	46
15	0.51877	0.85491	0.60681	1.6479	1.1697	1.9276	45
16	.51902	.85476	.60721	.6469	.1699	.9267	44
17	.51927	.85461	.60761	.6458	.1701	.9258	43
18	.51952	.85446	.60801	.6447	.1703	.9248	42
19	.51977	.85431	.60841	.6436	.1705	.9239	41
20	0.52002	0.85416	0.60881	1.6425	1.1707	1.9230	40
21	.52026	.85400	.60920	.6415	.1709	.9221	39
22	.52051	.85385	.60960	.6404	.1712	.9212	38
23	.52076	.85370	.61000	.6393	.1714	.9203	37
24	.52101	.85355	.61040	.6383	.1716	.9193	36
25	0.52126	0.85340	0.61080	1.6372	1.1718	1.9184	35
26	.52151	.85325	.61120	.6361	.1720	.9175	34
27	.52175	.85309	.61160	.6350	.1722	.9166	33
28	.52200	.85294	.61200	.6340	.1724	.9157	32
29	.52225	.85279	.61240	.6329	.1726	.9148	31
30	0.52250	0.85264	0.61280	1.6318	1.1728	1.9139	30
31	.52275	.85249	.61320	.6308	.1730	.9130	29
32	.52299	.85234	.61360	.6297	.1732	.9121	28
33	.52324	.85218	.61400	.6286	.1734	.9112	27
34	.52349	.85203	.61440	.6276	.1737	.9102	26
35	0.52374	0.85188	0.61480	1.6265	1.1739	1.9093	25
36	.52398	.85173	.61520	.6255	.1741	.9084	24
37	.52423	.85157	.61560	.6244	.1743	.9075	23
38	.52448	.85142	.61601	.6233	.1745	.9066	22
39	.52473	.85127	.61641	.6223	.1747	.9057	21
40	0.52498	0.85112	0.61681	1.6212	1.1749	1.9048	20
41	.52522	.85096	.61721	.6202	.1751	.9039	19
42	.52547	.85081	.61761	.6191	.1753	.9030	18
43	.52572	.85066	.61801	.6181	.1756	.9021	17
44	.52597	.85050	.61842	.6170	.1758	.9013	16
45	0.52621	0.85035	0.61882	1.6160	1.1760	1.9004	15
46	.52646	.85020	.61922	.6149	.1762	.8995	14
47	.52671	.85004	.61962	.6139	.1764	.8986	13
48	.52695	.84989	.62003	.6128	.1766	.8977	12
49	.52720	.84974	.62043	.6118	.1768	.8968	11
50	0.52745	0.84959	0.62083	1.6107	1.1770	1.8959	10
51	.52770	.84943	.62123	.6097	.1772	.8950	9
52	.52794	.84928	.62164	.6086	.1775	.8941	8
53	.52819	.84912	.62204	.6076	.1777	.8932	7
54	.52844	.84897	.62244	.6066	.1779	.8924	6
55	0.52868	0.84882	0.62285	1.6055	1.1781	1.8915	5
56	.52893	.84866	.62325	.6045	.1783	.8906	4
57	.52918	.84851	.62366	.6034	.1785	.8897	3
58	.52942	.84836	.62406	.6024	.1787	.8888	2
59	.52967	.84820	.62446	.6014	.1790	.8879	1
60	0.52992	0.84805	0.62487	1.6003	1.1792	1.8871	0
M	Cosine	Sine	Cotan.	Tan.	Cosec.	Secant	M

32°

M	Sine	Cosine	Tan.	Cotan.	Secant	Cosec.	M
0	0.52992	0.84805	0.62487	1.6003	1.1792	1.8871	60
1	.53016	.84789	.62527	.5993	.1794	.8862	59
2	.53041	.84774	.62568	.5983	.1796	.8853	58
3	.53066	.84758	.62608	.5972	.1798	.8844	57
4	.53090	.84743	.62649	.5962	.1800	.8836	56
5	0.53115	0.84728	0.62689	1.5952	1.1802	1.8827	55
6	.53140	.84712	.62730	.5941	.1805	.8818	54
7	.53164	.84697	.62770	.5931	.1807	.8809	53
8	.53189	.84681	.62811	.5921	.1809	.8801	52
9	.53214	.84666	.62851	.5910	.1811	.8792	51
10	0.53238	0.84650	0.62892	1.5900	1.1813	1.8783	50
11	.53263	.84635	.62933	.5890	.1815	.8775	49
12	.53288	.84619	.62973	.5880	.1818	.8766	48
13	.53312	.84604	.63014	.5869	.1820	.8757	47
14	.53337	.84588	.63055	.5859	.1822	.8749	46
15	0.53361	0.84573	0.63095	1.5849	1.1824	1.8740	45
16	.53386	.84557	.63136	.5839	.1826	.8731	44
17	.53411	.84542	.63177	.5829	.1828	.8723	43
18	.53435	.84526	.63217	.5818	.1831	.8714	42
19	.53460	.84511	.63258	.5808	.1833	.8706	41
20	0.53484	0.84495	0.63299	1.5798	1.1835	1.8697	40
21	.53509	.84479	.63339	.5788	.1837	.8688	39
22	.53533	.84461	.63380	.5778	.1839	.8680	38
23	.53558	.84448	.63421	.5768	.1841	.8671	37
24	.53583	.84433	.63462	.5757	.1844	.8663	36
25	0.53607	0.84417	0.63503	1.5747	1.1846	1.8654	35
26	.53632	.84402	.63543	.5737	.1848	.8646	34
27	.53656	.84386	.63584	.5727	.1850	.8637	33
28	.53681	.84370	.63625	.5717	.1852	.8629	32
29	.53705	.84355	.63666	.5707	.1855	.8620	31
30	0.53730	0.84339	0.63707	1.5697	1.1857	1.8611	30
31	.53754	.84323	.63748	.5687	.1859	.8603	29
32	.53779	.84308	.63789	.5677	.1861	.8595	28
33	.53803	.84292	.63830	.5667	.1863	.8586	27
34	.53828	.84276	.63871	.5657	.1866	.8578	26
35	0.53852	0.84261	0.63912	1.5646	1.1868	1.8569	25
36	.53877	.84245	.63953	.5636	.1870	.8561	24
37	.53901	.84229	.63994	.5626	.1872	.8552	23
38	.53926	.84214	.64035	.5616	.1874	.8544	22
39	.53950	.84198	.64076	.5606	.1877	.8535	21
40	0.53975	0.84182	0.64117	1.5596	1.1879	1.8527	20
41	.53999	.84167	.64158	.5586	.1881	.8519	19
42	.54024	.84151	.64199	.5577	.1883	.8510	18
43	.54048	.84135	.64240	.5567	.1886	.8502	17
44	.54073	.84120	.64281	.5557	.1888	.8493	16
45	0.54097	0.84104	0.64322	1.5547	1.1890	1.8485	15
46	.54122	.84088	.64363	.5537	.1892	.8477	14
47	.54146	.84072	.64404	.5527	.1894	.8468	13
48	.54171	.84057	.64446	.5517	.1897	.8460	12
49	.54195	.84041	.64487	.5507	.1899	.8452	11
50	0.54220	0.84025	0.64528	1.5497	1.1901	1.8443	10
51	.54244	.84009	.64569	.5487	.1903	.8435	9
52	.54268	.83993	.64610	.5477	.1906	.8427	8
53	.54293	.83978	.64652	.5467	.1908	.8418	7
54	.54317	.83962	.64693	.5458	.1910	.8410	6
55	0.54342	0.83946	0.64734	1.5448	1.1912	1.8402	5
56	.54366	.83930	.64775	.5438	.1915	.8394	4
57	.54391	.83914	.64817	.5428	.1917	.8385	3
58	.54415	.83899	.64858	.5418	.1919	.8377	2
59	.54439	.83883	.64899	.5408	.1921	.8369	1
60	0.54464	0.83867	0.64941	1.5399	1.1922	1.8361	0
M	Cosine	Sine	Cotan.	Tan.	Cosec.	Secant	M

33°

M	Sine	Cosine	Tan.	Cotan.	Secant	Cosec.	M
0	0.54464	0.83867	0.64941	1.5399	1.1924	1.8361	60
1	.54488	.83851	.64982	.5389	.1926	.8352	59
2	.54513	.83835	.65023	.5379	.1928	.8344	58
3	.54537	.83819	.65065	.5369	.1930	.8336	57
4	.54561	.83804	.65106	.5359	.1933	.8328	56
5	0.54586	0.83788	0.65148	1.5350	1.1935	1.8320	55
6	.54610	.83772	.65189	.5340	.1937	.8311	54
7	.54634	.83756	.65231	.5330	.1939	.8303	53
8	.54659	.83740	.65272	.5320	.1942	.8295	52
9	.54683	.83724	.65314	.5311	.1944	.8287	51
10	0.54708	0.83708	0.65355	1.5301	1.1946	1.8279	50
11	.54732	.83692	.65397	.5291	.1948	.8271	49
12	.54756	.83676	.65438	.5282	.1951	.8263	48
13	.54781	.83660	.65480	.5272	.1953	.8255	47
14	.54805	.83644	.65521	.5262	.1955	.8246	46
15	0.54829	0.83629	0.65563	1.5252	1.1958	1.8238	45
16	.54854	.83613	.65604	.5243	.1960	.8230	44
17	.54878	.83597	.65646	.5233	.1962	.8222	43
18	.54902	.83581	.65688	.5223	.1964	.8214	42
19	.54926	.83565	.65729	.5214	.1967	.8206	41
20	0.54951	0.83549	0.65771	1.5204	1.1969	1.8198	40
21	.54975	.83533	.65813	.5195	.1971	.8190	39
22	.54999	.83517	.65854	.5185	.1974	.8182	38
23	.55021	.83501	.65896	.5175	.1976	.8174	37
24	.55048	.83485	.65938	.5166	.1978	.8166	36
25	0.55072	0.83469	0.65980	1.5156	1.1980	1.8158	35
26	.55097	.83453	.66021	.5147	.1983	.8150	34
27	.55121	.83437	.66063	.5137	.1985	.8142	33
28	.55145	.83421	.66105	.5127	.1987	.8134	32
29	.55169	.83405	.66147	.5118	.1990	.8126	31
30	0.55194	0.83388	0.66188	1.5108	1.1992	1.8118	30
31	.55218	.83372	.66230	.5099	.1994	.8110	29
32	.55242	.83356	.66272	.5089	.1997	.8102	28
33	.55266	.83340	.66314	.5080	.1999	.8094	27
34	.55291	.83324	.66356	.5070	.2001	.8086	26
35	0.55315	0.83308	0.66398	1.5061	1.2004	1.8078	25
36	.55339	.83292	.66440	.5051	.2006	.8070	24
37	.55363	.83276	.66482	.5042	.2008	.8062	23
38	.55388	.83260	.66524	.5032	.2010	.8054	22
39	.55412	.83244	.66566	.5023	.2013	.8047	21
40	0.55436	0.83228	0.66608	1.5013	1.2015	1.8039	20
41	.55460	.83211	.66650	.5004	.2017	.8031	19
42	.55484	.83195	.66692	.4994	.2020	.8023	18
43	.55509	.83179	.66734	.4985	.2022	.8015	17
44	.55533	.83163	.66776	.4975	.2024	.8007	16
45	0.55557	0.83147	0.66818	1.4966	1.2027	1.7999	15
46	.55581	.83131	.66860	.4957	.2029	.7992	14
47	.55605	.83115	.66902	.4947	.2031	.7984	13
48	.55629	.83098	.66944	.4938	.2034	.7976	12
49	.55654	.83082	.66986	.4928	.2036	.7968	11
50	0.55678	0.83066	0.67028	1.4919	1.2039	1.7960	10
51	.55702	.83050	.67071	.4910	.2041	.7953	9
52	.55726	.83034	.67113	.4900	.2043	.7945	8
53	.55750	.83017	.67155	.4891	.2046	.7937	7
54	.55774	.83001	.67197	.4881	.2048	.7929	6
55	0.55799	0.82985	0.67239	1.4872	1.2050	1.7921	5
56	.55823	.82969	.67282	.4863	.2053	.7914	4
57	.55847	.82952	.67324	.4853	.2055	.7906	3
58	.55871	.82936	.67366	.4844	.2057	.7898	2
59	.55895	.82920	.67408	.4835	.2060	.7891	1
60	0.55919	0.82904	0.67451	1.4826	1.2062	1.7883	0
M	Cosine	Sine	Cotan.	Tan.	Cosec.	Secant	M

56°

34°

M	Sine	Cosine	Tan.	Cotan.	Secant	Cosec.	M
0	0.55919	0.82904	0.67451	1.4826	1.2062	1.7883	60
1	.55943	.82887	.67493	.4816	.2064	.7875	59
2	.55967	.82871	.67535	.4807	.2067	.7867	58
3	.55992	.82855	.67578	.4798	.2069	.7860	57
4	.56016	.82839	.67620	.4788	.2072	.7852	56
5	0.56040	0.82822	0.67663	1.4779	1.2074	1.7844	55
6	.56064	.82806	.67705	.4770	.2076	.7837	54
7	.56088	.82790	.67747	.4761	.2079	.7829	53
8	.56112	.82773	.67790	.4751	.2081	.7821	52
9	.56136	.82757	.67832	.4742	.2083	.7814	51
10	0.56160	0.82741	0.67875	1.4733	1.2086	1.7806	50
11	.56184	.82724	.67917	.4724	.2088	.7798	49
12	.56208	.82708	.67960	.4714	.2091	.7791	48
13	.56232	.82692	.68002	.4705	.2093	.7783	47
14	.56256	.82675	.68045	.4696	.2095	.7776	46
15	0.56280	0.82659	0.68087	1.4687	1.2098	1.7768	45
16	.56304	.82643	.68130	.4678	.2100	.7760	44
17	.56328	.82626	.68173	.4669	.2103	.7753	43
18	.56353	.82610	.68215	.4659	.2105	.7745	42
19	.56377	.82593	.68258	.4650	.2107	.7738	41
20	0.56401	0.82577	0.68301	1.4641	1.2110	1.7730	40
21	.56425	.82561	.68343	.4632	.2112	.7723	39
22	.56449	.82544	.68386	.4623	.2115	.7715	38
23	.56473	.82528	.68429	.4614	.2117	.7708	37
24	.56497	.82511	.68471	.4605	.2119	.7700	36
25	0.56521	0.82495	0.68514	1.4595	1.2122	1.7693	35
26	.56545	.82478	.68557	.4586	.2124	.7685	34
27	.56569	.82462	.68600	.4577	.2127	.7678	33
28	.56593	.82445	.68642	.4568	.2129	.7670	32
29	.56617	.82429	.68685	.4559	.2132	.7663	31
30	0.56641	0.82413	0.68728	1.4550	1.2134	1.7655	30
31	.56664	.82396	.68771	.4541	.2136	.7648	29
32	.56688	.82380	.68814	.4532	.2139	.7640	28
33	.56712	.82363	.68857	.4523	.2141	.7633	27
34	.56736	.82347	.68899	.4514	.2144	.7625	26
35	0.56760	0.82330	0.68942	1.4505	1.2146	1.7618	25
36	.56784	.82314	.68985	.4496	.2149	.7610	24
37	.56808	.82297	.69028	.4487	.2151	.7603	23
38	.56832	.82280	.69071	.4478	.2153	.7596	22
39	.56856	.82264	.69114	.4469	.2156	.7588	21
40	0.56880	0.82247	0.69157	1.4460	1.2158	1.7581	20
41	.56904	.82231	.69200	.4451	.2161	.7573	19
42	.56928	.82214	.69243	.4442	.2163	.7566	18
43	.56952	.82198	.69286	.4433	.2166	.7559	17
44	.56976	.82181	.69329	.4424	.2168	.7551	16
45	0.57000	0.82165	0.69372	1.4415	1.2171	1.7544	15
46	.57023	.82148	.69415	.4406	.2173	.7537	14
47	.57047	.82131	.69459	.4397	.2175	.7529	13
48	.57071	.82115	.69502	.4388	.2178	.7522	12
49	.57095	.82098	.69545	.4379	.2180	.7514	11
50	0.57119	0.82082	0.69588	1.4370	1.2183	1.7507	10
51	.57143	.82065	.69631	.4361	.2185	.7500	9
52	.57167	.82048	.69674	.4352	.2188	.7493	8
53	.57191	.82032	.69718	.4343	.2190	.7485	7
54	.57214	.82015	.69761	.4335	.2193	.7478	6
55	0.57238	0.81998	0.69804	1.4326	1.2195	1.7471	5
56	.57262	.81982	.69847	.4317	.2198	.7463	4
57	.57286	.81965	.69891	.4308	.2200	.7456	3
58	.57310	.81948	.69934	.4299	.2203	.7449	2
59	.57334	.81932	.69977	.4290	.2205	.7442	1
60	0.57358	0.81915	0.70021	1.4281	1.2208	1.7434	0
M	Cosine	Sine	Cotan.	Tan.	Cosec.	Secant	M

55°

35°

M	Sine	Cosine	Tan.	Cotan.	Secant	Cosec.	M
0	0.57358	0.81915	0.70021	1.4281	1.2208	1.7434	60
1	.57381	.81898	.70064	.4273	.2210	.7427	59
2	.57405	.81882	.70107	.4264	.2213	.7420	58
3	.57429	.81865	.70151	.4255	.2215	.7413	57
4	.57453	.81848	.70194	.4246	.2218	.7405	56
5	0.57477	0.81832	0.70238	1.4237	1.2220	1.7398	55
6	.57500	.81815	.70281	.4228	.2223	.7391	54
7	.57524	.81798	.70325	.4220	.2225	.7384	53
8	.57548	.81781	.70368	.4211	.2228	.7377	52
9	.57572	.81765	.70412	.4202	.2230	.7369	51
10	0.57596	0.81748	0.70455	1.4193	1.2233	1.7362	50
11	.57619	.81731	.70499	.4185	.2235	.7355	49
12	.57643	.81714	.70542	.4176	.2238	.7348	48
13	.57667	.81698	.70586	.4167	.2240	.7341	47
14	.57691	.81681	.70629	.4158	.2243	.7334	46
15	0.57714	0.81664	0.70673	1.4150	1.2245	1.7327	45
16	.57738	.81647	.70717	.4141	.2248	.7319	44
17	.57762	.81630	.70760	.4132	.2250	.7312	43
18	.57786	.81614	.70804	.4123	.2253	.7305	42
19	.57809	.81597	.70848	.4115	.2255	.7298	41
20	0.57833	0.81580	0.70891	1.4106	1.2258	1.7291	40
21	.57857	.81563	.70935	.4097	.2260	.7284	39
22	.57881	.81546	.70979	.4089	.2263	.7277	38
23	.57904	.81530	.71022	.4080	.2265	.7270	37
24	.57928	.81513	.71066	.4071	.2268	.7263	36
25	0.57952	0.81496	0.71110	1.4063	1.2270	1.7256	35
26	.57975	.81479	.71154	.4054	.2273	.7249	34
27	.57999	.81462	.71198	.4045	.2276	.7242	33
28	.58023	.81445	.71241	.4037	.2278	.7234	32
29	.58047	.81428	.71285	.4028	.2281	.7227	31
30	0.58070	0.81411	0.71329	1.4019	1.2283	1.7220	30
31	.58094	.81395	.71373	.4011	.2286	.7213	29
32	.58118	.81378	.71417	.4002	.2288	.7206	28
33	.58141	.81361	.71461	.3994	.2291	.7199	27
34	.58165	.81344	.71505	.3985	.2293	.7192	26
35	0.58189	0.81327	0.71549	1.3976	1.2296	1.7185	25
36	.58212	.81310	.71593	.3968	.2298	.7178	24
37	.58236	.81293	.71637	.3959	.2301	.7171	23
38	.58259	.81276	.71681	.3951	.2304	.7164	22
39	.58283	.81259	.71725	.3942	.2306	.7157	21
40	0.58307	0.81242	0.71769	1.3933	1.2309	1.7151	20
41	.58330	.81225	.71813	.3925	.2311	.7144	19
42	.58354	.81208	.71857	.3916	.2314	.7137	18
43	.58378	.81191	.71901	.3908	.2316	.7130	17
44	.58401	.81174	.71945	.3899	.2319	.7123	16
45	0.58425	0.81157	0.71990	1.3891	1.2322	1.7116	15
46	.58448	.81140	.72034	.3882	.2324	.7109	14
47	.58472	.81123	.72078	.3874	.2327	.7102	13
48	.58496	.81106	.72122	.3865	.2329	.7095	12
49	.58519	.81089	.72166	.3857	.2332	.7088	11
50	0.58543	0.81072	0.72211	1.3848	1.2335	1.7081	10
51	.58566	.81055	.72255	.3840	.2337	.7075	9
52	.58590	.81038	.72299	.3831	.2340	.7068	8
53	.58614	.81021	.72344	.3823	.2342	.7061	7
54	.58637	.81004	.72388	.3814	.2345	.7054	6
55	0.58661	0.80987	0.72432	1.3806	1.2348	1.7047	5
56	.58684	.80970	.72477	.3797	.2350	.7040	4
57	.58708	.80953	.72521	.3789	.2353	.7033	3
58	.58731	.80936	.72565	.3781	.2355	.7027	2
59	.58755	.80919	.72610	.3772	.2358	.7020	1
60	0.58778	0.80902	0.72654	1.3764	1.2361	1.7013	0
M	Cosine	Sine	Cotan.	Tan.	Cosec.	Secant	M

54°

TABLES OF NATURAL TRIGONOMETRIC FUNCTIONS

36°

M	Sine	Cosine	Tan.	Cotan.	Secant	Cosec.	M
0	0.58778	0.80902	0.72654	1.3764	1.2361	1.7013	60
1	.58802	.80885	.72699	.3755	.2363	.7006	59
2	.58825	.80867	.72743	.3747	.2366	.6999	58
3	.58849	.80850	.72788	.3738	.2368	.6993	57
4	.58873	.80833	.72832	.3730	.2371	.6986	56
5	0.58896	0.80816	0.72877	1.3722	1.2374	1.6979	55
6	.58920	.80799	.72921	.3713	.2376	.6972	54
7	.58943	.80782	.72966	.3705	.2379	.6965	53
8	.58967	.80765	.73010	.3697	.2382	.6959	52
9	.58990	.80747	.73055	.3688	.2384	.6952	51
10	0.59011	0.80730	0.73100	1.3680	1.2387	1.6945	50
11	.59037	.80713	.73144	.3672	.2389	.6938	49
12	.59060	.80696	.73189	.3663	.2392	.6932	48
13	.59084	.80679	.73234	.3655	.2395	.6925	47
14	.59107	.80662	.73278	.3647	.2397	.6918	46
15	0.59131	0.80644	0.73323	1.3638	1.2400	1.6912	45
16	.59154	.80627	.73368	.3630	.2403	.6905	44
17	.59178	.80610	.73412	.3622	.2405	.6898	43
18	.59201	.80593	.73457	.3613	.2408	.6891	42
19	.59225	.80576	.73502	.3605	.2411	.6885	41
20	0.59248	0.80558	0.73547	1.3597	1.2413	1.6878	40
21	.59272	.80541	.73592	.3588	.2416	.6871	39
22	.59295	.80524	.73637	.3580	.2419	.6865	38
23	.59318	.80507	.73681	.3572	.2421	.6858	37
24	.59342	.80489	.73726	.3564	.2424	.6851	36
25	0.59365	0.80472	0.73771	1.3555	1.2427	1.6845	35
26	.59389	.80455	.73816	.3547	.2429	.6838	34
27	.59412	.80437	.73861	.3539	.2432	.6831	33
28	.59435	.80420	.73906	.3531	.2435	.6825	32
29	.59459	.80403	.73951	.3522	.2437	.6818	31
30	0.59482	0.80386	0.73996	1.3514	1.2440	1.6812	30
31	.59506	.80368	.74041	.3506	.2443	.6805	29
32	.59529	.80351	.74086	.3498	.2445	.6798	28
33	.59552	.80334	.74131	.3489	.2448	.6792	27
34	.59576	.80316	.74176	.3481	.2451	.6785	26
35	0.59599	0.80299	0.74221	1.3473	1.2453	1.6779	25
36	.59622	.80282	.74266	.3465	.2456	.6772	24
37	.59646	.80264	.74312	.3457	.2459	.6766	23
38	.59669	.80247	.74357	.3449	.2461	.6759	22
39	.59692	.80230	.74402	.3440	.2464	.6752	21
40	0.59716	0.80212	0.74447	1.3432	1.2467	1.6746	20
41	.59739	.80195	.74492	.3424	.2470	.6739	19
42	.59762	.80177	.74538	.3416	.2472	.6733	18
43	.59786	.80160	.74583	.3408	.2475	.6726	17
44	.59809	.80143	.74628	.3400	.2478	.6720	16
45	0.59832	0.80125	0.74673	1.3392	1.2480	1.6713	15
46	.59856	.80108	.74719	.3383	.2483	.6707	14
47	.59879	.80090	.74764	.3375	.2486	.6700	13
48	.59902	.80073	.74809	.3367	.2488	.6694	12
49	.59926	.80056	.74855	.3359	.2491	.6687	11
50	0.59949	0.80038	0.74900	1.3351	1.2494	1.6681	10
51	.59972	.80021	.74946	.3343	.2497	.6674	9
52	.59995	.80003	.74991	.3335	.2499	.6668	8
53	.60019	.79986	.75037	.3327	.2502	.6661	7
54	.60042	.79968	.75082	.3319	.2505	.6655	6
55	0.60065	0.79951	0.75128	1.3311	1.2508	1.6648	5
56	.60088	.79933	.75173	.3303	.2510	.6642	4
57	.60112	.79916	.75219	.3294	.2513	.6636	3
58	.60135	.79898	.75264	.3286	.2516	.6629	2
59	.60158	.79881	.75310	.3278	.2519	.6623	1
60	0.60181	0.79863	0.75355	1.3270	1.2521	1.6616	0
M	Cosine	Sine	Cotan.	Tan.	Cosec.	Secant	M

37°

M	Sine	Cosine	Tan.	Cotan.	Secant	Cosec.	M
0	0.60181	0.79863	0.75355	1.3270	1.2521	1.6616	60
1	.60205	.79846	.75401	.3262	.2524	.6610	59
2	.60228	.79828	.75447	.3254	.2527	.6603	58
3	.60251	.79811	.75492	.3246	.2530	.6597	57
4	.60274	.79793	.75538	.3238	.2532	.6591	56
5	0.60298	0.79776	0.75584	1.3230	1.2535	1.6584	55
6	.60320	.79758	.75629	.3222	.2538	.6578	54
7	.60344	.79741	.75675	.3214	.2541	.6572	53
8	.60367	.79723	.75721	.3206	.2543	.6565	52
9	.60390	.79706	.75767	.3198	.2546	.6559	51
10	0.60413	0.79688	0.75812	1.3190	1.2549	1.6552	50
11	.60437	.79670	.75858	.3182	.2552	.6546	49
12	.60460	.79653	.75904	.3174	.2554	.6540	48
13	.60483	.79635	.75950	.3166	.2557	.6533	47
14	.60506	.79618	.75996	.3159	.2560	.6527	46
15	0.60529	0.79600	0.76042	1.3151	1.2563	1.6521	45
16	.60552	.79582	.76088	.3143	.2565	.6514	44
17	.60576	.79565	.76134	.3135	.2568	.6508	43
18	.60599	.79547	.76179	.3127	.2571	.6502	42
19	.60622	.79530	.76225	.3119	.2574	.6496	41
20	0.60645	0.79512	0.76271	1.3111	1.2577	1.6489	40
21	.60668	.79494	.76317	.3103	.2579	.6483	39
22	.60691	.79477	.76364	.3095	.2582	.6477	38
23	.60714	.79459	.76410	.3087	.2585	.6470	37
24	.60737	.79441	.76456	.3079	.2588	.6464	36
25	0.60761	0.79424	0.76502	1.3071	1.2591	1.6458	35
26	.60784	.79406	.76548	.3064	.2593	.6452	34
27	.60807	.79388	.76594	.3056	.2596	.6445	33
28	.60830	.79371	.76640	.3048	.2599	.6439	32
29	.60853	.79353	.76686	.3040	.2602	.6433	31
30	0.60876	0.79335	0.76733	1.3032	1.2605	1.6427	30
31	.60899	.79318	.76779	.3024	.2607	.6420	29
32	.60922	.79300	.76825	.3016	.2610	.6414	28
33	.60945	.79282	.76871	.3009	.2613	.6408	27
34	.60968	.79264	.76918	.3001	.2616	.6402	26
35	0.60991	0.79247	0.76964	1.2993	1.2619	1.6396	25
36	.61014	.79229	.77010	.2985	.2622	.6389	24
37	.61037	.79211	.77057	.2977	.2624	.6383	23
38	.61061	.79193	.77103	.2970	.2627	.6377	22
39	.61084	.79176	.77149	.2962	.2630	.6371	21
40	0.61107	0.79158	0.77196	1.2954	1.2633	1.6365	20
41	.61130	.79140	.77242	.2946	.2636	.6359	19
42	.61153	.79122	.77289	.2938	.2639	.6352	18
43	.61176	.79104	.77335	.2931	.2641	.6346	17
44	.61199	.79087	.77382	.2923	.2644	.6340	16
45	0.61222	0.79069	0.77428	1.2915	1.2647	1.6334	15
46	.61245	.79051	.77475	.2907	.2650	.6328	14
47	.61268	.79033	.77521	.2900	.2653	.6322	13
48	.61290	.79015	.77568	.2892	.2656	.6316	12
49	.61314	.78998	.77614	.2884	.2659	.6309	11
50	0.61337	0.78980	0.77661	1.2876	1.2661	1.6303	10
51	.61360	.78962	.77708	.2869	.2664	.6297	9
52	.61383	.78944	.77754	.2861	.2667	.6291	8
53	.61405	.78926	.77801	.2853	.2670	.6285	7
54	.61428	.78908	.77848	.2845	.2673	.6279	6
55	0.61451	0.78890	0.77895	1.2838	1.2676	1.6273	5
56	.61474	.78873	.77941	.2830	.2679	.6267	4
57	.61497	.78855	.77988	.2822	.2681	.6261	3
58	.61520	.78837	.78035	.2815	.2684	.6255	2
59	.61543	.78819	.78082	.2807	.2687	.6249	1
60	0.61566	0.78801	0.78128	1.2799	1.2690	1.6243	0
M	Cosine	Sine	Cotan.	Tan.	Cosec.	Secant	M

38°

M	Sine	Cosine	Tan.	Cotan.	Secant	Cosec.	M
0	0.61566	0.78801	0.78128	1.2799	1.2690	1.6243	60
1	.61589	.78783	.78175	.2792	.2693	.6237	59
2	.61612	.78765	.78222	.2784	.2696	.6231	58
3	.61635	.78747	.78269	.2776	.2699	.6224	57
4	.61658	.78729	.78316	.2769	.2702	.6218	56
5	0.61681	0.78711	0.78363	1.2761	1.2705	1.6212	55
6	.61703	.78693	.78410	.2753	.2707	.6206	54
7	.61726	.78675	.78457	.2746	.2710	.6200	53
8	.61749	.78657	.78504	.2738	.2713	.6194	52
9	.61772	.78640	.78551	.2730	.2716	.6188	51
10	0.61795	0.78622	0.78598	1.2723	1.2719	1.6182	50
11	.61818	.78603	.78645	.2715	.2722	.6176	49
12	.61841	.78586	.78692	.2708	.2725	.6170	47
13	.61864	.78568	.78739	.2700	.2728	.6164	47
14	.61886	.78550	.78786	.2692	.2731	.6159	46
15	0.61909	0.78532	0.78834	1.2685	1.2734	1.6153	45
16	.61932	.78514	.78881	.2677	.2737	.6147	44
17	.61955	.78496	.78928	.2670	.2739	.6141	43
18	.61978	.78478	.78975	.2662	.2742	.6135	42
19	.62001	.78460	.79022	.2655	.2745	.6129	41
20	0.62023	0.78441	0.79070	1.2647	1.2748	1.6123	40
21	.62046	.78423	.79117	.2639	.2751	.6117	39
22	.62069	.78405	.79164	.2632	.2754	.6111	38
23	.62092	.78387	.79212	.2624	.2757	.6105	37
24	.62115	.78369	.79259	.2617	.2760	.6099	36
25	0.62137	0.78351	0.79306	1.2609	1.2763	1.6093	35
26	.62160	.78333	.79354	.2602	.2766	.6087	34
27	.62183	.78315	.79401	.2594	.2769	.6081	33
28	.62206	.78297	.79449	.2587	.2772	.6077	32
29	.62229	.78279	.79496	.2579	.2775	.6070	31
30	0.62251	0.78261	0.79543	1.2572	1.2778	1.6064	30
31	.62274	.78243	.79591	.2564	.2781	.6058	29
32	.62297	.78224	.79639	.2557	.2784	.6052	28
33	.62320	.78206	.79686	.2549	.2787	.6046	27
34	.62342	.78188	.79734	.2542	.2790	.6040	26
35	0.62365	0.78170	0.79781	1.2534	1.2793	1.6034	25
36	.62388	.78152	.79829	.2527	.2795	.6029	24
37	.62411	.78134	.79876	.2519	.2798	.6023	23
38	.62433	.78116	.79924	.2512	.2801	.6017	22
39	.62456	.78097	.79972	.2504	.2804	.6011	21
40	0.62479	0.78079	0.80020	1.2497	1.2807	1.6005	20
41	.62501	.78061	.80067	.2489	.2810	.6000	19
42	.62524	.78043	.80115	.2482	.2813	.5994	18
43	.62547	.78025	.80163	.2475	.2816	.5988	17
44	.62570	.78007	.80211	.2467	.2819	.5982	16
45	0.62592	0.77988	0.80258	1.2460	1.2822	1.5976	15
46	.62615	.77970	.80306	.2452	.2825	.5971	14
47	.62638	.77952	.80354	.2445	.2828	.5965	13
48	.62660	.77934	.80402	.2437	.2831	.5959	12
49	.62683	.77915	.80450	.2430	.2834	.5953	11
50	0.62706	0.77897	0.80498	1.2423	1.2837	1.5947	10
51	.62728	.77879	.80546	.2415	.2840	.5942	9
52	.62751	.77861	.80594	.2408	.2843	.5936	8
53	.62774	.77842	.80642	.2400	.2846	.5930	7
54	.62796	.77824	.80690	.2393	.2849	.5924	6
55	0.62819	0.77806	0.80738	1.2386	1.2852	1.5919	5
56	.62841	.77788	.80786	.2378	.2855	.5913	4
57	.62864	.77769	.80834	.2371	.2858	.5907	3
58	.62887	.77751	.80882	.2364	.2861	.5901	2
59	.62909	.77733	.80930	.2356	.2864	.5896	1
60	0.62932	0.77715	0.80978	1.2349	1.2867	1.5890	0
M	Cosine	Sine	Cotan.	Tan.	Cosec.	Secant	M

39°

M	Sine	Cosine	Tan.	Cotan.	Secant	Cosec.	M
0	0.62932	0.77715	0.80978	1.2349	1.2867	1.5890	60
1	.62955	.77696	.81036	.2342	.2871	.5884	59
2	.62977	.77678	.81075	.2334	.2874	.5879	58
3	.63000	.77660	.81123	.2327	.2877	.5873	57
4	.63022	.77641	.81171	.2320	.2880	.5867	56
5	0.63045	0.77623	0.81219	1.2312	1.2883	1.5862	55
6	.63067	.77605	.81268	.2305	.2886	.5856	54
7	.63090	.77586	.81316	.2297	.2889	.5850	53
8	.63113	.77568	.81364	.2290	.2892	.5845	52
9	.63135	.77549	.81413	.2283	.2895	.5839	51
10	0.63158	0.77531	0.81461	1.2276	1.2898	1.5833	50
11	.63180	.77511	.81509	.2268	.2901	.5828	49
12	.63203	.77494	.81558	.2261	.2904	.5822	48
13	.63225	.77476	.81606	.2254	.2907	.5816	47
14	.63248	.77458	.81655	.2247	.2910	.5811	46
15	0.63270	0.77439	0.81703	1.2239	1.2913	1.5805	45
16	.63293	.77421	.81752	.2232	.2916	.5799	44
17	.63315	.77402	.81800	.2225	.2919	.5794	43
18	.63338	.77384	.81849	.2218	.2922	.5788	42
19	.63360	.77365	.81898	.2210	.2926	.5783	41
20	0.63383	0.77347	0.81946	1.2203	1.2929	1.5777	40
21	.63405	.77329	.81995	.2196	.2932	.5771	39
22	.63428	.77310	.82013	.2189	.2935	.5766	38
23	.63450	.77292	.82092	.2181	.2938	.5760	37
24	.63473	.77273	.82141	.2174	.2941	.5755	36
25	0.63495	0.77255	0.82190	1.2167	1.2944	1.5749	35
26	.63518	.77236	.82238	.2160	.2947	.5743	34
27	.63540	.77218	.82287	.2152	.2950	.5738	33
28	.63563	.77199	.82336	.2145	.2953	.5732	32
29	.63585	.77181	.82385	.2138	.2956	.5727	31
30	0.63608	0.77162	0.82434	1.2131	1.2960	1.5721	30
31	.63630	.77144	.82482	.2124	.2963	.5716	29
32	.63653	.77125	.82531	.2117	.2966	.5710	28
33	.63675	.77107	.82580	.2109	.2969	.5705	27
34	.63697	.77088	.82629	.2102	.2972	.5699	26
35	0.63720	0.77070	0.82678	1.2095	1.2975	1.5694	25
36	.63742	.77051	.82727	.2088	.2978	.5688	24
37	.63765	.77033	.82776	.2081	.2981	.5683	23
38	.63787	.77014	.82825	.2074	.2985	.5677	22
39	.63810	.76996	.82874	.2066	.2988	.5672	21
40	0.63832	0.76977	0.82923	1.2059	1.2991	1.5666	20
41	.63854	.76958	.82972	.2052	.2994	.5661	19
42	.63877	.76940	.83022	.2045	.2997	.5655	18
43	.63899	.76921	.83071	.2038	.3000	.5650	17
44	.63921	.76903	.83120	.2031	.3003	.5644	16
45	0.63944	0.76884	0.83169	1.2024	1.3006	1.5639	15
46	.63966	.76865	.83218	.2016	.3010	.5633	14
47	.63989	.76847	.83267	.2009	.3013	.5628	13
48	.64011	.76828	.83317	.2002	.3016	.5622	12
49	.64033	.76810	.83366	.1995	.3019	.5617	11
50	0.64056	0.76791	0.83415	1.1988	1.3022	1.5611	10
51	.64078	.76772	.83465	.1981	.3025	.5606	9
52	.64100	.76754	.83514	.1974	.3029	.5600	8
53	.64123	.76735	.83563	.1967	.3032	.5595	7
54	.64145	.76716	.83613	.1960	.3035	.5590	6
55	0.64167	0.76698	0.83662	1.1953	1.3038	1.5584	5
56	.64189	.76679	.83712	.1946	.3041	.5579	4
57	.64212	.76660	.83761	.1939	.3044	.5573	3
58	.64234	.76642	.83811	.1932	.3048	.5568	2
59	.64256	.76623	.83860	.1921	.3051	.5563	1
60	0.64279	0.76604	0.83910	1.1917	1.3054	1.5557	0
M	Cosine	Sine	Cotan.	Tan.	Cosec.	Secant	M

50°

40°

M	Sine	Cosine	Tan.	Cotan.	Secant	Cosec.	M
0	0.64279	0.76604	0.83910	1.1917	1.3054	1.5557	60
1	.64301	.76586	.83959	.1910	.3057	.5552	59
2	.64323	.76567	.84009	.1903	.3060	.5546	58
3	.64345	.76548	.84059	.1896	.3064	.5541	57
4	.64368	.76530	.84108	.1889	.3067	.5536	56
5	0.64390	0.76511	0.84158	1.1882	1.3070	1.5530	55
6	.64412	.76492	.84208	.1875	.3073	.5525	54
7	.64435	.76473	.84257	.1868	.3076	.5520	53
8	.64457	.76455	.84307	.1861	.3080	.5514	52
9	.64479	.76436	.84357	.1854	.3083	.5509	51
10	0.64501	0.76417	0.84407	1.1847	1.3086	1.5503	50
11	.64523	.76398	.84457	.1840	.3089	.5498	49
12	.64546	.76380	.84506	.1833	.3092	.5493	48
13	.64568	.76361	.84556	.1826	.3096	.5487	47
14	.64590	.76342	.84606	.1819	.3099	.5482	46
15	0.64612	0.76323	0.84656	1.1812	1.3102	1.5477	45
16	.64635	.76304	.84706	.1805	.3105	.5471	44
17	.64657	.76286	.84756	.1798	.3109	.5466	43
18	.64679	.76267	.84806	.1791	.3112	.5461	42
19	.64701	.76248	.84856	.1785	.3115	.5456	41
20	0.64723	0.76229	0.84906	1.1778	1.3118	1.5450	40
21	.64745	.76210	.84956	.1771	.3121	.5445	39
22	.64768	.76191	.85006	.1764	.3125	.5440	38
23	.64790	.76173	.85056	.1757	.3128	.5434	37
24	.64812	.76154	.85107	.1750	.3131	.5429	36
25	0.64834	0.76135	0.85157	1.1743	1.3134	1.5424	35
26	.64856	.76116	.85207	.1736	.3138	.5419	34
27	.64878	.76097	.85257	.1729	.3141	.5413	33
28	.64900	.76078	.85307	.1722	.3144	.5408	32
29	.64923	.76059	.85358	.1715	.3148	.5403	31
30	0.64945	0.76041	0.85408	1.1708	1.3151	1.5398	30
31	.64967	.76022	.85458	.1702	.3154	.5392	29
32	.64989	.76003	.85509	.1695	.3157	.5387	28
33	.65011	.75984	.85559	.1688	.3161	.5382	27
34	.65033	.75965	.85609	.1681	.3164	.5377	26
35	0.65055	0.75946	0.85660	1.1674	1.3167	1.5371	25
36	.65077	.75927	.85710	.1667	.3170	.5366	24
37	.65100	.75908	.85761	.1660	.3174	.5361	23
38	.65121	.75889	.85811	.1653	.3177	.5356	22
39	.65144	.75870	.85862	.1647	.3180	.5351	21
40	0.65166	0.75851	0.85912	1.1640	1.3184	1.5345	20
41	.65188	.75832	.85963	.1633	.3187	.5340	19
42	.65210	.75813	.86013	.1626	.3190	.5335	18
43	.65232	.75794	.86064	.1619	.3193	.5330	17
44	.65254	.75775	.86115	.1612	.3197	.5325	16
45	0.65276	0.75756	0.86165	1.1605	1.3200	1.5319	15
46	.65298	.75737	.86216	.1599	.3203	.5314	14
47	.65320	.75718	.86267	.1592	.3207	.5309	13
48	.65342	.75700	.86318	.1585	.3210	.5304	12
49	.65364	.75680	.86368	.1578	.3213	.5299	11
50	0.65386	0.75661	0.86419	1.1571	1.3217	1.5294	10
51	.65408	.75642	.86470	.1565	.3220	.5289	9
52	.65430	.75623	.86521	.1558	.3223	.5283	8
53	.65452	.75604	.86572	.1551	.3227	.5278	7
54	.65474	.75585	.86623	.1544	.3230	.5273	6
55	0.65496	0.75566	0.86674	1.1537	1.3233	1.5268	5
56	.65518	.75547	.86725	.1531	.3237	.5263	4
57	.65540	.75528	.86775	.1524	.3240	.5258	3
58	.65562	.75509	.86826	.1517	.3243	.5253	2
59	.65581	.75490	.86878	.1510	.3247	.5248	1
60	0.65606	0.75471	0.86929	1.1504	1.3250	1.5242	0
M	Cosine	Sine	Cotan.	Tan.	Cosec.	Secant	M

49°

44°

M	Sine	Cosine	Tan.	Cotan.	Secant	Cosec.	M
0	0.65606	0.75471	0.86929	1.1504	1.3250	1.5242	60
1	.65628	.75452	.86980	.1497	.3253	.5237	59
2	.65650	.75433	.87031	.1490	.3257	.5232	58
3	.65672	.75414	.87082	.1483	.3260	.5227	57
4	.65694	.75394	.87133	.1477	.3263	.5222	56
5	0.65716	0.75375	0.87184	1.1470	1.3267	1.5217	55
6	.65737	.75356	.87235	.1463	.3270	.5212	54
7	.65759	.75337	.87287	.1456	.3274	.5207	53
8	.65781	.75318	.87338	.1450	.3277	.5202	52
9	.65803	.75299	.87389	.1443	.3280	.5197	51
10	0.65825	0.75280	0.87441	1.1436	1.3284	1.5192	50
11	.65847	.75261	.87492	.1430	.3287	.5187	49
12	.65869	.75241	.87543	.1423	.3290	.5182	48
13	.65891	.75222	.87595	.1416	.3294	.5177	47
14	.65913	.75203	.87646	.1409	.3297	.5171	46
15	0.65934	0.75184	0.87698	1.1403	1.3301	1.5166	45
16	.65956	.75165	.87749	.1396	.3304	.5161	44
17	.65978	.75146	.87801	.1389	.3307	.5156	43
18	.66000	.75126	.87852	.1383	.3311	.5151	42
19	.66022	.75107	.87904	.1376	.3314	.5146	41
20	0.66044	0.75088	0.87955	1.1369	1.3318	1.5141	40
21	.66066	.75069	.88007	.1363	.3321	.5136	39
22	.66087	.75049	.88058	.1356	.3324	.5131	38
23	.66109	.75030	.88110	.1349	.3328	.5126	37
24	.66131	.75011	.88162	.1343	.3331	.5121	36
25	0.66153	0.74992	0.88213	1.1336	1.3335	1.5116	35
26	.66175	.74973	.88265	.1329	.3338	.5111	34
27	.66197	.74953	.88317	.1323	.3342	.5106	33
28	.66218	.74934	.88369	.1316	.3345	.5101	32
29	.66240	.74915	.88421	.1309	.3348	.5096	31
30	0.66262	0.74895	0.88472	1.1303	1.3352	1.5092	30
31	.66284	.74876	.88524	.1296	.3355	.5087	29
32	.66305	.74857	.88576	.1290	.3359	.5082	28
33	.66327	.74838	.88628	.1283	.3362	.5077	27
34	.66349	.74818	.88680	.1276	.3366	.5072	26
35	0.66371	0.74799	0.88732	1.1270	1.3369	1.5067	25
36	.66393	.74780	.88784	.1263	.3372	.5062	24
37	.66414	.74760	.88836	.1257	.3376	.5057	23
38	.66436	.74741	.88888	.1250	.3379	.5052	22
39	.66458	.74722	.88940	.1243	.3383	.5047	21
40	0.66479	0.74702	0.88992	1.1237	1.3386	1.5042	20
41	.66501	.74683	.89044	.1230	.3390	.5037	19
42	.66523	.74663	.89097	.1224	.3393	.5032	18
43	.66545	.74644	.89149	.1217	.3397	.5027	17
44	.66566	.74625	.89201	.1211	.3400	.5022	16
45	0.66588	0.74606	0.89253	1.1204	1.3404	1.5018	15
46	.66610	.74586	.89306	.1197	.3407	.5013	14
47	.66631	.74567	.89358	.1191	.3411	.5008	13
48	.66653	.74548	.89410	.1184	.3414	.5003	12
49	.66675	.74528	.89463	.1178	.3418	.4998	11
50	0.66697	0.74509	0.89515	1.1171	1.3421	1.4993	10
51	.66718	.74489	.89567	.1165	.3425	.4988	9
52	.66740	.74470	.89620	.1158	.3428	.4983	8
53	.66762	.74450	.89672	.1152	.3432	.4979	7
54	.66783	.74431	.89725	.1145	.3435	.4974	6
55	0.66805	0.74412	0.89777	1.1139	1.3439	1.4969	5
56	.66826	.74392	.89830	.1132	.3442	.4964	4
57	.66848	.74373	.89882	.1126	.3446	.4959	3
58	.66870	.74353	.89935	.1119	.3449	.4954	2
59	.66891	.74334	.89988	.1113	.3453	.4949	1
60	0.66913	0.74314	0.90040	1.1106	1.3456	1.4945	0
M	Cosine	Sine	Cotan.	Tan.	Cosec.	Secant	M

48°

TABLES OF NATURAL TRIGONOMETRIC FUNCTIONS

36°

M	Sine	Cosine	Tan.	Cotan.	Secant	Cosec.	M
0	0.58778	0.80902	0.72654	1.3764	1.2361	1.7013	60
1	.58802	.80885	.72699	.3755	.2363	.7006	59
2	.58825	.80867	.72743	.3747	.2366	.6999	58
3	.58849	.80850	.72788	.3738	.2368	.6993	57
4	.58873	.80833	.72832	.3730	.2371	.6986	56
5	0.58896	0.80816	0.72877	1.3722	1.2374	1.6979	55
6	.58920	.80799	.72921	.3713	.2376	.6972	54
7	.58943	.80782	.72966	.3705	.2379	.6965	53
8	.58967	.80765	.73010	.3697	.2382	.6959	52
9	.58990	.80747	.73055	.3688	.2384	.6952	51
10	0.59014	0.80730	0.73100	1.3680	1.2387	1.6945	50
11	.59037	.80713	.73144	.3672	.2389	.6938	49
12	.59060	.80696	.73189	.3663	.2392	.6932	48
13	.59084	.80679	.73234	.3655	.2395	.6925	47
14	.59107	.80662	.73278	.3647	.2397	.6918	46
15	0.59131	0.80644	0.73323	1.3638	1.2400	1.6912	45
16	.59154	.80627	.73368	.3630	.2403	.6905	44
17	.59178	.80610	.73412	.3622	.2405	.6898	43
18	.59201	.80593	.73457	.3613	.2408	.6891	42
19	.59225	.80576	.73502	.3605	.2411	.6885	41
20	0.59248	0.80558	0.73547	1.3597	1.2413	1.6878	40
21	.59272	.80541	.73592	.3588	.2416	.6871	39
22	.59295	.80524	.73637	.3580	.2419	.6865	38
23	.59318	.80507	.73681	.3572	.2421	.6858	37
24	.59342	.80489	.73726	.3564	.2424	.6851	36
25	0.59365	0.80472	0.73771	1.3555	1.2427	1.6845	35
26	.59389	.80455	.73816	.3547	.2429	.6838	34
27	.59412	.80437	.73861	.3539	.2432	.6831	33
28	.59435	.80420	.73906	.3531	.2435	.6825	32
29	.59459	.80403	.73951	.3522	.2437	.6818	31
30	0.59482	0.80386	0.73996	1.3514	1.2440	1.6812	30
31	.59506	.80368	.74041	.3506	.2443	.6805	29
32	.59529	.80351	.74086	.3498	.2445	.6798	28
33	.59552	.80334	.74131	.3489	.2448	.6792	27
34	.59576	.80316	.74176	.3481	.2451	.6785	26
35	0.59599	0.80299	0.74221	1.3473	1.2453	1.6779	25
36	.59622	.80282	.74266	.3465	.2456	.6772	24
37	.59646	.80264	.74312	.3457	.2459	.6766	23
38	.59669	.80247	.74357	.3449	.2461	.6759	22
39	.59692	.80230	.74402	.3440	.2464	.6752	21
40	0.59716	0.80212	0.74447	1.3432	1.2467	1.6746	20
41	.59739	.80195	.74492	.3424	.2470	.6739	19
42	.59762	.80177	.74538	.3416	.2472	.6733	18
43	.59786	.80160	.74583	.3408	.2475	.6726	17
44	.59809	.80143	.74628	.3400	.2478	.6720	16
45	0.59832	0.80125	0.74673	1.3392	1.2480	1.6713	15
46	.59856	.80108	.74719	.3383	.2483	.6707	14
47	.59879	.80090	.74764	.3375	.2486	.6700	13
48	.59902	.80073	.74809	.3367	.2488	.6694	12
49	.59926	.80056	.74855	.3359	.2491	.6687	11
50	0.59949	0.80038	0.74900	1.3351	1.2494	1.6681	10
51	.59972	.80021	.74946	.3343	.2497	.6674	9
52	.59995	.80003	.74991	.3335	.2499	.6668	8
53	.60019	.79986	.75037	.3327	.2502	.6661	7
54	.60042	.79968	.75082	.3319	.2505	.6655	6
55	0.60065	0.79951	0.75128	1.3311	1.2508	1.6648	5
56	.60088	.79933	.75173	.3303	.2510	.6642	4
57	.60112	.79916	.75219	.3294	.2513	.6636	3
58	.60135	.79898	.75264	.3286	.2516	.6629	2
59	.60158	.79881	.75310	.3278	.2519	.6623	1
60	0.60181	0.79863	0.75355	1.3270	1.2521	1.6616	0
M	Cosine	Sine	Cotan.	Tan.	Cosec.	Secant	M

37°

M	Sine	Cosine	Tan.	Cotan.	Secant	Cosec.	M
0	0.60181	0.79863	0.75355	1.3270	1.2521	1.6616	60
1	.60205	.79846	.75401	.3262	.2524	.6610	59
2	.60228	.79828	.75447	.3254	.2527	.6603	58
3	.60251	.79811	.75492	.3246	.2530	.6597	57
4	.60274	.79793	.75538	.3238	.2532	.6591	56
5	0.60298	0.79776	0.75584	1.3230	1.2535	1.6584	55
6	.60320	.79758	.75629	.3222	.2538	.6578	54
7	.60344	.79741	.75675	.3214	.2541	.6572	53
8	.60367	.79723	.75721	.3206	.2543	.6565	52
9	.60390	.79706	.75767	.3198	.2546	.6559	51
10	0.60413	0.79688	0.75812	1.3190	1.2549	1.6552	50
11	.60437	.79670	.75858	.3182	.2552	.6546	49
12	.60460	.79653	.75904	.3174	.2554	.6540	48
13	.60483	.79635	.75950	.3166	.2557	.6533	47
14	.60506	.79618	.75996	.3159	.2560	.6527	46
15	0.60529	0.79600	0.76042	1.3151	1.2563	1.6521	45
16	.60552	.79582	.76088	.3143	.2565	.6514	44
17	.60576	.79565	.76134	.3135	.2568	.6508	43
18	.60599	.79547	.76179	.3127	.2571	.6502	42
19	.60622	.79530	.76225	.3119	.2574	.6496	41
20	0.60645	0.79512	0.76271	1.3111	1.2577	1.6489	40
21	.60668	.79494	.76317	.3103	.2579	.6483	39
22	.60691	.79477	.76364	.3095	.2582	.6477	38
23	.60714	.79459	.76410	.3087	.2585	.6470	37
24	.60737	.79441	.76456	.3079	.2588	.6464	36
25	0.60761	0.79424	0.76502	1.3071	1.2591	1.6458	35
26	.60784	.79406	.76548	.3064	.2593	.6452	34
27	.60807	.79388	.76594	.3056	.2596	.6445	33
28	.60830	.79371	.76640	.3048	.2599	.6439	32
29	.60853	.79353	.76686	.3040	.2602	.6433	31
30	0.60876	0.79335	0.76733	1.3032	1.2605	1.6427	30
31	.60899	.79318	.76779	.3024	.2607	.6420	29
32	.60922	.79300	.76825	.3016	.2610	.6414	28
33	.60945	.79282	.76871	.3009	.2613	.6408	27
34	.60968	.79264	.76918	.3001	.2616	.6402	26
35	0.60991	0.79247	0.76964	1.2993	1.2619	1.6396	25
36	.61014	.79229	.77010	.2985	.2622	.6389	24
37	.61037	.79211	.77057	.2977	.2624	.6383	23
38	.61061	.79193	.77103	.2970	.2627	.6377	22
39	.61084	.79176	.77149	.2962	.2630	.6371	21
40	0.61107	0.79158	0.77196	1.2954	1.2633	1.6365	20
41	.61130	.79140	.77242	.2946	.2636	.6359	19
42	.61153	.79122	.77289	.2938	.2639	.6352	18
43	.61176	.79104	.77335	.2931	.2641	.6346	17
44	.61199	.79087	.77382	.2923	.2644	.6340	16
45	0.61222	0.79069	0.77428	1.2915	1.2647	1.6334	15
46	.61245	.79051	.77475	.2907	.2650	.6328	14
47	.61268	.79033	.77521	.2900	.2653	.6322	13
48	.61290	.79015	.77568	.2892	.2656	.6316	12
49	.61314	.78998	.77614	.2884	.2659	.6309	11
50	0.61337	0.78980	0.77661	1.2876	1.2661	1.6303	10
51	.61360	.78962	.77708	.2869	.2664	.6297	9
52	.61383	.78944	.77754	.2861	.2667	.6291	8
53	.61405	.78926	.77801	.2853	.2670	.6285	7
54	.61428	.78908	.77848	.2845	.2673	.6279	6
55	0.61451	0.78890	0.77895	1.2838	1.2676	1.6273	5
56	.61474	.78873	.77941	.2830	.2679	.6267	4
57	.61497	.78855	.77988	.2822	.2681	.6261	3
58	.61520	.78837	.78035	.2815	.2684	.6255	2
59	.61543	.78819	.78082	.2807	.2687	.6249	1
60	0.61566	0.78801	0.78128	1.2799	1.2690	1.6243	0
M	Cosine	Sine	Cotan.	Tan.	Cosec.	Secant	M

38°

M	Sine	Cosine	Tan.	Cotan.	Secant	Cosec.	M
0	0.61566	0.78801	0.78128	1.2799	1.2690	1.6243	60
1	.61589	.78783	.78175	.2792	.2693	.6237	59
2	.61612	.78765	.78222	.2784	.2696	.6231	58
3	.61635	.78747	.78269	.2776	.2699	.6224	57
4	.61658	.78729	.78316	.2769	.2702	.6218	56
5	0.61681	0.78711	0.78363	1.2761	1.2705	1.6212	55
6	.61703	.78693	.78410	.2753	.2707	.6206	54
7	.61726	.78675	.78457	.2746	.2710	.6200	53
8	.61749	.78657	.78504	.2738	.2713	.6194	52
9	.61772	.78640	.78551	.2730	.2716	.6188	51
10	0.61795	0.78622	0.78598	1.2723	1.2719	1.6182	50
11	.61818	.78604	.78645	.2715	.2722	.6176	49
12	.61841	.78586	.78692	.2708	.2725	.6170	48
13	.61864	.78568	.78739	.2700	.2728	.6164	47
14	.61886	.78550	.78786	.2692	.2731	.6159	46
15	0.61909	0.78532	0.78834	1.2685	1.2734	1.6153	45
16	.61932	.78514	.78881	.2677	.2737	.6147	44
17	.61955	.78496	.78928	.2670	.2739	.6141	43
18	.61978	.78478	.78975	.2662	.2742	.6135	42
19	.62001	.78460	.79022	.2655	.2745	.6129	41
20	0.62023	0.78441	0.79070	1.2647	1.2748	1.6123	40
21	.62046	.78423	.79117	.2639	.2751	.6117	39
22	.62069	.78405	.79164	.2632	.2754	.6111	38
23	.62092	.78387	.79212	.2624	.2757	.6105	37
24	.62115	.78369	.79259	.2617	.2760	.6099	36
25	0.62137	0.78351	0.79308	1.2609	1.2763	1.6093	35
26	.62160	.78333	.79354	.2602	.2766	.6087	34
27	.62183	.78315	.79401	.2594	.2769	.6081	33
28	.62206	.78297	.79449	.2587	.2772	.6077	32
29	.62229	.78279	.79496	.2579	.2775	.6070	31
30	0.62251	0.78261	0.79543	1.2572	1.2778	1.6064	30
31	.62274	.78243	.79591	.2564	.2781	.6058	29
32	.62297	.78224	.79639	.2557	.2784	.6052	28
33	.62320	.78206	.79686	.2549	.2787	.6046	27
34	.62342	.78188	.79734	.2542	.2790	.6040	26
35	0.62365	0.78170	0.79781	1.2534	1.2793	1.6034	25
36	.62388	.78152	.79829	.2527	.2795	.6029	24
37	.62411	.78134	.79876	.2519	.2798	.6023	23
38	.62433	.78116	.79924	.2512	.2801	.6017	22
39	.62456	.78097	.79972	.2504	.2804	.6011	21
40	0.62479	0.78079	0.80020	1.2497	1.2807	1.6005	20
41	.62501	.78061	.80067	.2489	.2810	.6000	19
42	.62524	.78043	.80115	.2482	.2813	.5994	18
43	.62547	.78025	.80163	.2475	.2816	.5988	17
44	.62570	.78007	.80211	.2467	.2819	.5982	16
45	0.62592	0.77988	0.80258	1.2460	1.2822	1.5976	15
46	.62615	.77970	.80306	.2452	.2825	.5971	14
47	.62638	.77952	.80354	.2445	.2828	.5965	13
48	.62660	.77934	.80402	.2437	.2831	.5959	12
49	.62683	.77915	.80450	.2430	.2834	.5953	11
50	0.62706	0.77897	0.80498	1.2423	1.2837	1.5947	10
51	.62728	.77879	.80546	.2415	.2840	.5942	9
52	.62751	.77861	.80594	.2408	.2843	.5936	8
53	.62774	.77842	.80642	.2400	.2846	.5930	7
54	.62796	.77824	.80690	.2393	.2849	.5924	6
55	0.62819	0.77806	0.80738	1.2386	1.2852	1.5919	5
56	.62841	.77788	.80786	.2378	.2855	.5913	4
57	.62864	.77769	.80834	.2371	.2858	.5907	3
58	.62887	.77751	.80882	.2364	.2861	.5901	2
59	.62909	.77733	.80930	.2356	.2864	.5896	1
60	0.62932	0.77715	0.80978	1.2349	1.2867	1.5890	0
M	Cosine	Sine	Cotan.	Tan.	Cosec.	Secant	M

39°

M	Sine	Cosine	Tan.	Cotan.	Secant	Cosec.	M
0	0.62932	0.77715	0.80978	1.2349	1.2867	1.5890	60
1	.62955	.77696	.81027	.2342	.2870	.5884	59
2	.62977	.77678	.81075	.2334	.2873	.5878	58
3	.63000	.77660	.81123	.2327	.2876	.5872	57
4	.63022	.77641	.81171	.2320	.2879	.5866	56
5	0.63045	0.77623	0.81220	1.2312	1.2882	1.5860	55
6	.63068	.77605	.81268	.2305	.2885	.5854	54
7	.63090	.77586	.81316	.2297	.2888	.5848	53
8	.63113	.77568	.81364	.2290	.2891	.5842	52
9	.63135	.77550	.81413	.2283	.2894	.5836	51
10	0.63158	0.77531	0.81461	1.2275	1.2897	1.5830	50
11	.63180	.77513	.81510	.2268	.2900	.5825	49
12	.63203	.77494	.81558	.2260	.2903	.5819	48
13	.63225	.77476	.81606	.2253	.2906	.5813	47
14	.63248	.77458	.81655	.2246	.2909	.5807	46
15	0.63271	0.77439	0.81703	1.2238	1.2912	1.5801	45
16	.63293	.77421	.81752	.2231	.2915	.5795	44
17	.63316	.77402	.81800	.2224	.2918	.5789	43
18	.63338	.77384	.81849	.2216	.2921	.5783	42
19	.63361	.77366	.81898	.2209	.2924	.5778	41
20	0.63383	0.77347	0.81946	1.2202	1.2927	1.5772	40
21	.63406	.77329	.81995	.2194	.2930	.5766	39
22	.63428	.77310	.82044	.2187	.2933	.5760	38
23	.63451	.77292	.82092	.2180	.2936	.5754	37
24	.63473	.77273	.82141	.2172	.2939	.5748	36
25	0.63496	0.77255	0.82190	1.2165	1.2942	1.5742	35
26	.63518	.77236	.82238	.2158	.2945	.5736	34
27	.63540	.77218	.82287	.2150	.2948	.5730	33
28	.63563	.77199	.82336	.2143	.2951	.5724	32
29	.63585	.77181	.82385	.2136	.2954	.5718	31
30	0.63608	0.77162	0.82434	1.2128	1.2957	1.5712	30
31	.63630	.77144	.82483	.2121	.2960	.5707	29
32	.63653	.77125	.82531	.2113	.2963	.5701	28
33	.63675	.77107	.82580	.2106	.2966	.5695	27
34	.63698	.77088	.82629	.2099	.2969	.5689	26
35	0.63720	0.77070	0.82678	1.2091	1.2972	1.5683	25
36	.63742	.77051	.82727	.2084	.2975	.5677	24
37	.63765	.77033	.82776	.2077	.2978	.5671	23
38	.63787	.77014	.82825	.2069	.2981	.5665	22
39	.63810	.76996	.82874	.2062	.2984	.5660	21
40	0.63832	0.76977	0.82923	1.2055	1.2987	1.5654	20
41	.63854	.76959	.82972	.2047	.2990	.5648	19
42	.63877	.76940	.83022	.2040	.2993	.5642	18
43	.63899	.76921	.83071	.2033	.2996	.5636	17
44	.63922	.76903	.83120	.2025	.2999	.5630	16
45	0.63944	0.76884	0.83169	1.2018	1.3002	1.5625	15
46	.63966	.76866	.83218	.2011	.3005	.5619	14
47	.63989	.76847	.83268	.2003	.3008	.5613	13
48	.64011	.76828	.83317	.1996	.3011	.5607	12
49	.64033	.76810	.83366	.1989	.3014	.5601	11
50	0.64056	0.76791	0.83415	1.1981	1.3017	1.5595	10
51	.64078	.76772	.83465	.1974	.3020	.5590	9
52	.64100	.76754	.83514	.1967	.3023	.5584	8
53	.64123	.76735	.83564	.1959	.3026	.5578	7
54	.64145	.76717	.83613	.1952	.3029	.5572	6
55	0.64167	0.76698	0.83662	1.1945	1.3033	1.5566	5
56	.64190	.76679	.83712	.1937	.3036	.5561	4
57	.64212	.76661	.83761	.1930	.3039	.5555	3
58	.64234	.76642	.83811	.1923	.3042	.5549	2
59	.64256	.76623	.83860	.1915	.3045	.5543	1
60	0.64279	0.76604	0.83910	1.1908	1.3048	1.5538	0
M	Cosine	Sine	Cotan.	Tan.	Cosec.	Secant	M

39°

M	Sine	Cosine	Tan.	Cotan.	Secant	Cosec.	M
0	0.62932	0.77715	0.80978	1.2349	1.2867	1.5890	60
1	.62955	.77696	.81026	.2342	.2871	.5884	59
2	.62977	.77678	.81075	.2334	.2874	.5879	58
3	.63000	.77660	.81123	.2327	.2877	.5873	57
4	.63022	.77641	.81171	.2320	.2880	.5867	56
5	0.63045	0.77623	0.81219	1.2312	1.2883	1.5862	55
6	.63067	.77605	.81268	.2305	.2886	.5856	54
7	.63090	.77586	.81316	.2297	.2889	.5850	53
8	.63113	.77568	.81364	.2290	.2892	.5845	52
9	.63135	.77549	.81413	.2283	.2895	.5839	51
10	0.63158	0.77531	0.81461	1.2276	1.2898	1.5833	50
11	.63180	.77511	.81509	.2268	.2901	.5828	49
12	.63203	.77494	.81558	.2261	.2904	.5822	48
13	.63225	.77476	.81606	.2254	.2907	.5816	47
14	.63248	.77458	.81655	.2247	.2910	.5811	46
15	0.63270	0.77439	0.81703	1.2239	1.2913	1.5805	45
16	.63293	.77421	.81752	.2232	.2916	.5799	44
17	.63315	.77402	.81800	.2225	.2919	.5794	43
18	.63338	.77384	.81849	.2218	.2922	.5788	42
19	.63360	.77365	.81898	.2210	.2926	.5783	41
20	0.63383	0.77347	0.81946	1.2203	1.2929	1.5777	40
21	.63405	.77329	.81995	.2196	.2932	.5771	39
22	.63428	.77310	.82043	.2189	.2935	.5766	38
23	.63450	.77292	.82092	.2181	.2938	.5760	37
24	.63473	.77273	.82141	.2174	.2941	.5755	36
25	0.63495	0.77255	0.82190	1.2167	1.2944	1.5749	35
26	.63518	.77236	.82238	.2160	.2947	.5743	34
27	.63540	.77218	.82287	.2152	.2950	.5738	33
28	.63563	.77199	.82336	.2145	.2953	.5732	32
29	.63585	.77181	.82385	.2138	.2956	.5727	31
30	0.63608	0.77162	0.82434	1.2131	1.2960	1.5721	30
31	.63630	.77144	.82482	.2124	.2963	.5716	29
32	.63653	.77125	.82531	.2117	.2966	.5710	28
33	.63675	.77107	.82580	.2109	.2969	.5705	27
34	.63697	.77088	.82629	.2102	.2972	.5699	26
35	0.63720	0.77070	0.82678	1.2095	1.2975	1.5694	25
36	.63742	.77051	.82727	.2088	.2978	.5688	24
37	.63765	.77033	.82776	.2081	.2981	.5683	23
38	.63787	.77014	.82825	.2071	.2985	.5677	22
39	.63810	.76996	.82874	.2066	.2988	.5672	21
40	0.63832	0.76977	0.82923	1.2059	1.2991	1.5666	20
41	.63854	.76958	.82972	.2052	.2994	.5661	19
42	.63877	.76940	.83022	.2045	.2997	.5655	18
43	.63899	.76921	.83071	.2038	.3000	.5650	17
44	.63921	.76903	.83120	.2031	.3003	.5644	16
45	0.63944	0.76884	0.83169	1.2024	1.3006	1.5639	15
46	.63966	.76865	.83218	.2016	.3010	.5633	14
47	.63989	.76847	.83267	.2009	.3013	.5628	13
48	.64011	.76828	.83317	.2002	.3016	.5622	12
49	.64033	.76810	.83366	.1995	.3019	.5617	11
50	0.64056	0.76791	0.83415	1.1988	1.3022	1.5611	10
51	.64078	.76772	.83465	.1981	.3025	.5606	9
52	.64100	.76754	.83514	.1974	.3029	.5600	8
53	.64123	.76735	.83563	.1967	.3032	.5595	7
54	.64145	.76716	.83613	.1960	.3035	.5590	6
55	0.64167	0.76698	0.83662	1.1953	1.3038	1.5584	5
56	.64189	.76679	.83712	.1946	.3041	.5579	4
57	.64212	.76660	.83761	.1939	.3044	.5573	3
58	.64234	.76642	.83811	.1932	.3048	.5568	2
59	.64256	.76623	.83860	.1921	.3051	.5563	1
60	0.64279	0.76604	0.83910	1.1917	1.3054	1.5557	0
M	Cosine	Sine	Cotan.	Tan.	Cosec.	Secant	M

50°

40°

M	Sine	Cosine	Tan.	Cotan.	Secant	Cosec.	M
0	0.64279	0.76604	0.83910	1.1917	1.3054	1.5557	60
1	.64301	.76586	.83959	.1910	.3057	.5552	59
2	.64323	.76567	.84009	.1903	.3060	.5546	58
3	.64345	.76548	.84059	.1896	.3064	.5541	57
4	.64368	.76530	.84108	.1889	.3067	.5536	56
5	0.64390	0.76511	0.84158	1.1882	1.3070	1.5530	55
6	.64412	.76492	.84208	.1875	.3073	.5525	54
7	.64435	.76473	.84257	.1868	.3076	.5520	53
8	.64457	.76455	.84307	.1861	.3080	.5514	52
9	.64479	.76436	.84357	.1854	.3083	.5509	51
10	0.64501	0.76417	0.84407	1.1847	1.3086	1.5503	50
11	.64523	.76398	.84457	.1840	.3089	.5498	49
12	.64546	.76380	.84506	.1833	.3093	.5493	48
13	.64568	.76361	.84556	.1826	.3096	.5487	47
14	.64590	.76342	.84606	.1819	.3099	.5482	46
15	0.64612	0.76323	0.84656	1.1812	1.3102	1.5477	45
16	.64635	.76304	.84706	.1805	.3105	.5471	44
17	.64657	.76286	.84756	.1798	.3109	.5466	43
18	.64679	.76267	.84806	.1791	.3112	.5461	42
19	.64701	.76248	.84856	.1785	.3115	.5456	41
20	0.64723	0.76229	0.84906	1.1778	1.3118	1.5450	40
21	.64745	.76210	.84956	.1771	.3121	.5445	39
22	.64768	.76191	.85006	.1764	.3125	.5440	38
23	.64790	.76173	.85056	.1757	.3128	.5434	37
24	.64812	.76154	.85107	.1750	.3131	.5429	36
25	0.64834	0.76135	0.85157	1.1743	1.3134	1.5424	35
26	.64856	.76116	.85207	.1736	.3138	.5419	34
27	.64878	.76097	.85257	.1729	.3141	.5413	33
28	.64900	.76078	.85307	.1722	.3144	.5408	32
29	.64923	.76059	.85358	.1715	.3148	.5403	31
30	0.64945	0.76041	0.85408	1.1708	1.3151	1.5398	30
31	.64967	.76022	.85458	.1702	.3154	.5392	29
32	.64989	.76003	.85509	.1695	.3157	.5387	28
33	.65011	.75983	.85559	.1688	.3161	.5382	27
34	.65033	.75965	.85609	.1681	.3164	.5377	26
35	0.65055	0.75946	0.85660	1.1674	1.3167	1.5371	25
36	.65077	.75927	.85710	.1667	.3170	.5366	24
37	.65100	.75908	.85761	.1660	.3174	.5361	23
38	.65121	.75889	.85811	.1653	.3177	.5356	22
39	.65144	.75870	.85862	.1647	.3180	.5351	21
40	0.65166	0.75851	0.85912	1.1640	1.3184	1.5345	20
41	.65188	.75832	.85963	.1633	.3187	.5340	19
42	.65210	.75813	.86013	.1626	.3190	.5335	18
43	.65232	.75794	.86064	.1619	.3193	.5330	17
44	.65254	.75775	.86115	.1612	.3197	.5325	16
45	0.65276	0.75756	0.86165	1.1605	1.3200	1.5319	15
46	.65298	.75737	.86216	.1599	.3203	.5314	14
47	.65320	.75718	.86267	.1592	.3207	.5309	13
48	.65342	.75700	.86318	.1585	.3210	.5304	12
49	.65364	.75680	.86368	.1578	.3213	.5299	11
50	0.65386	0.75661	0.86419	1.1571	1.3217	1.5294	10
51	.65408	.75642	.86470	.1565	.3220	.5289	9
52	.65430	.75623	.86521	.1558	.3223	.5283	8
53	.65452	.75604	.86572	.1551	.3227	.5278	7
54	.65474	.75585	.86623	.1544	.3230	.5273	6
55	0.65496	0.75566	0.86674	1.1537	1.3233	1.5268	5
56	.65518	.75547	.86725	.1531	.3237	.5263	4
57	.65540	.75528	.86775	.1524	.3240	.5258	3
58	.65562	.75509	.86826	.1517	.3243	.5253	2
59	.65584	.75490	.86878	.1510	.3247	.5248	1
60	0.65606	0.75471	0.86929	1.1504	1.3250	1.5242	0
M	Cosine	Sine	Cotan.	Tan.	Cosec.	Secant	M

49°

41°

M	Sine	Cosine	Tan.	Cotan.	Secant	Cosec.	M
0	0.65606	0.75471	0.86929	1.1504	1.3250	1.5242	60
1	.65628	.75452	.86980	.1497	.3253	.5237	59
2	.65650	.75433	.87031	.1490	.3257	.5232	58
3	.65672	.75414	.87082	.1483	.3260	.5227	57
4	.65694	.75391	.87133	.1477	.3263	.5222	56
5	0.65716	0.75375	0.87184	1.1470	1.3267	1.5217	55
6	.65737	.75356	.87235	.1463	.3270	.5212	54
7	.65759	.75337	.87287	.1456	.3274	.5207	53
8	.65781	.75318	.87338	.1450	.3277	.5202	52
9	.65803	.75299	.87389	.1443	.3280	.5197	51
10	0.65825	0.75280	0.87441	1.1436	1.3284	1.5192	50
11	.65847	.75261	.87492	.1430	.3287	.5187	49
12	.65869	.75241	.87543	.1423	.3290	.5182	48
13	.65891	.75222	.87595	.1416	.3294	.5177	47
14	.65913	.75203	.87646	.1409	.3297	.5171	46
15	0.65934	0.75184	0.87698	1.1403	1.3301	1.5166	45
16	.65956	.75165	.87749	.1396	.3304	.5161	44
17	.65978	.75146	.87801	.1389	.3307	.5156	43
18	.66000	.75126	.87852	.1383	.3311	.5151	42
19	.66022	.75107	.87904	.1376	.3314	.5146	41
20	0.66044	0.75088	0.87955	1.1369	1.3318	1.5141	40
21	.66066	.75069	.88007	.1363	.3321	.5136	39
22	.66087	.75049	.88058	.1356	.3324	.5131	38
23	.66109	.75030	.88110	.1349	.3328	.5126	37
24	.66131	.75011	.88162	.1343	.3331	.5121	36
25	0.66153	0.74992	0.88213	1.1336	1.3335	1.5116	35
26	.66175	.74973	.88265	.1329	.3338	.5111	34
27	.66197	.74953	.88317	.1323	.3342	.5106	33
28	.66218	.74934	.88369	.1316	.3345	.5101	32
29	.66240	.74915	.88421	.1309	.3348	.5096	31
30	0.66262	0.74895	0.88472	1.1303	1.3352	1.5092	30
31	.66284	.74876	.88524	.1296	.3355	.5087	29
32	.66305	.74857	.88576	.1290	.3359	.5082	28
33	.66327	.74838	.88628	.1283	.3362	.5077	27
34	.66349	.74818	.88680	.1276	.3366	.5072	26
35	0.66371	0.74799	0.88732	1.1270	1.3369	1.5067	25
36	.66393	.74780	.88784	.1263	.3372	.5062	24
37	.66414	.74760	.88836	.1257	.3376	.5057	23
38	.66436	.74741	.88888	.1250	.3379	.5052	22
39	.66458	.74722	.88940	.1243	.3383	.5047	21
40	0.66479	0.74702	0.88992	1.1237	1.3386	1.5042	20
41	.66501	.74683	.89044	.1230	.3390	.5037	19
42	.66523	.74664	.89097	.1224	.3393	.5032	18
43	.66545	.74644	.89149	.1217	.3397	.5027	17
44	.66566	.74625	.89201	.1211	.3400	.5022	16
45	0.66588	0.74606	0.89253	1.1204	1.3404	1.5018	15
46	.66610	.74586	.89306	.1197	.3407	.5013	14
47	.66631	.74567	.89358	.1191	.3411	.5008	13
48	.66653	.74548	.89410	.1184	.3414	.5003	12
49	.66675	.74528	.89463	.1178	.3418	.4998	11
50	0.66697	0.74509	0.89515	1.1171	1.3421	1.4993	10
51	.66718	.74489	.89567	.1165	.3425	.4988	9
52	.66740	.74470	.89620	.1158	.3428	.4983	8
53	.66762	.74450	.89672	.1152	.3432	.4979	7
54	.66783	.74431	.89725	.1145	.3435	.4974	6
55	0.66805	0.74412	0.89777	1.1139	1.3439	1.4969	5
56	.66826	.74392	.89830	.1132	.3442	.4964	4
57	.66848	.74373	.89882	.1126	.3446	.4959	3
58	.66870	.74353	.89935	.1119	.3449	.4954	2
59	.66891	.74334	.89988	.1113	.3453	.4949	1
60	0.66913	0.74314	0.90040	1.1106	1.3456	1.4945	0
M	Cosine	Sine	Cotan.	Tan.	Cosec.	Secant	M

48°

TABLES OF NATURAL TRIGONOMETRIC FUNCTIONS

42°

M	Sine	Cosine	Tan.	Cotan.	Secant	Cosec.	M
0	0.66913	0.74314	0.90040	1.1106	1.3456	1.4945	60
1	.66935	.74295	.90093	.1100	.3460	.4940	59
2	.66956	.74275	.90146	.1094	.3463	.4935	58
3	.66978	.74256	.90198	.1086	.3467	.4930	57
4	.66999	.74236	.90251	.1080	.3470	.4925	56
5	0.67021	0.74217	0.90304	1.1074	1.3474	1.4921	55
6	.67043	.74197	.90357	.1067	.3477	.4916	54
7	.67064	.74178	.90410	.1061	.3481	.4911	53
8	.67086	.74158	.90463	.1054	.3485	.4906	52
9	.67107	.74139	.90515	.1048	.3488	.4901	51
10	0.67129	0.74119	0.90568	1.1041	1.3492	1.4897	50
11	.67150	.74100	.90621	.1035	.3495	.4892	49
12	.67172	.74080	.90674	.1028	.3499	.4887	48
13	.67194	.74061	.90727	.1022	.3502	.4882	47
14	.67215	.74041	.90780	.1015	.3506	.4877	46
15	0.67237	0.74022	0.90833	1.1009	1.3509	1.4873	45
16	.67258	.74002	.90887	.1003	.3513	.4868	44
17	.67280	.73983	.90940	.0996	.3517	.4863	43
18	.67301	.73963	.90993	.0990	.3520	.4858	42
19	.67323	.73943	.91046	.0983	.3524	.4854	41
20	0.67344	0.73924	0.91099	1.0977	1.3527	1.4849	40
21	.67366	.73904	.91153	.0971	.3531	.4844	39
22	.67387	.73885	.91206	.0964	.3534	.4839	38
23	.67409	.73865	.91259	.0958	.3538	.4835	37
24	.67430	.73845	.91312	.0951	.3542	.4830	36
25	0.67452	0.73826	0.91366	1.0945	1.3545	1.4825	35
26	.67473	.73806	.91419	.0939	.3549	.4821	34
27	.67495	.73787	.91473	.0932	.3552	.4816	33
28	.67516	.73767	.91526	.0926	.3556	.4811	32
29	.67537	.73747	.91580	.0919	.3560	.4806	31
30	0.67559	0.73728	0.91633	1.0913	1.3563	1.4802	30
31	.67580	.73708	.91687	.0907	.3567	.4797	29
32	.67602	.73688	.91740	.0900	.3571	.4792	28
33	.67623	.73669	.91794	.0894	.3574	.4788	27
34	.67645	.73649	.91847	.0888	.3578	.4783	26
35	0.67666	0.73629	0.91901	1.0881	1.3581	1.4778	25
36	.67688	.73610	.91955	.0875	.3585	.4774	24
37	.67709	.73590	.92008	.0868	.3589	.4769	23
38	.67730	.73570	.92062	.0862	.3592	.4764	22
39	.67752	.73551	.92116	.0856	.3596	.4760	21
40	0.67773	0.73531	0.92170	1.0849	1.3600	1.4755	20
41	.67795	.73511	.92223	.0843	.3603	.4750	19
42	.67816	.73491	.92277	.0837	.3607	.4746	18
43	.67837	.73472	.92331	.0830	.3611	.4741	17
44	.67859	.73452	.92385	.0824	.3614	.4736	16
45	0.67880	0.73432	0.92439	1.0818	1.3618	1.4732	15
46	.67901	.73412	.92493	.0812	.3622	.4727	14
47	.67923	.73393	.92547	.0805	.3625	.4723	13
48	.67944	.73373	.92601	.0799	.3629	.4718	12
49	.67965	.73353	.92655	.0793	.3633	.4713	11
50	0.67987	0.73333	0.92709	1.0786	1.3636	1.4709	10
51	.68008	.73314	.92763	.0780	.3640	.4704	9
52	.68029	.73294	.92817	.0774	.3644	.4699	8
53	.68051	.73274	.92871	.0767	.3647	.4695	7
54	.68072	.73254	.92926	.0761	.3651	.4690	6
55	0.68093	0.73234	0.92980	1.0755	1.3655	1.4686	5
56	.68115	.73215	.93034	.0749	.3658	.4681	4
57	.68136	.73195	.93088	.0742	.3662	.4676	3
58	.68157	.73175	.93143	.0736	.3666	.4672	2
59	.68178	.73155	.93197	.0730	.3669	.4667	1
60	0.68200	0.73135	0.93251	1.0724	1.3673	1.4663	0
M	Cosine	Sine	Cotan.	Tan.	Cosec.	Secant	M

47°

43°

M	Sine	Cosine	Tan.	Cotan.	Secant	Cosec.	M
0	0.68200	0.73135	0.93251	1.0724	1.3673	1.4663	60
1	.68221	.73115	.93306	.0717	.3677	.4658	59
2	.68242	.73096	.93360	.0711	.3681	.4654	58
3	.68264	.73076	.93415	.0705	.3684	.4649	57
4	.68285	.73056	.93469	.0699	.3688	.4644	56
5	0.68306	0.73036	0.93524	1.0692	1.3692	1.4640	55
6	.68327	.73016	.93578	.0686	.3695	.4635	54
7	.68349	.72996	.93633	.0680	.3699	.4631	53
8	.68370	.72976	.93687	.0674	.3703	.4626	52
9	.68391	.72956	.93742	.0667	.3707	.4622	51
10	0.68412	0.72937	0.93797	1.0661	1.3710	1.4617	50
11	.68433	.72917	.93851	.0655	.3714	.4613	49
12	.68455	.72897	.93906	.0649	.3718	.4608	48
13	.68476	.72877	.93961	.0643	.3722	.4604	47
14	.68497	.72857	.94016	.0636	.3725	.4599	46
15	0.68518	0.72837	0.94071	1.0630	1.3729	1.4595	45
16	.68539	.72817	.94125	.0624	.3733	.4590	44
17	.68561	.72797	.94180	.0618	.3737	.4586	43
18	.68582	.72777	.94235	.0612	.3740	.4581	42
19	.68603	.72757	.94290	.0605	.3744	.4577	41
20	0.68624	0.72737	0.94345	1.0599	1.3748	1.4572	40
21	.68645	.72717	.94400	.0593	.3752	.4568	39
22	.68666	.72697	.94455	.0587	.3756	.4563	38
23	.68688	.72677	.94510	.0581	.3759	.4559	37
24	.68709	.72657	.94565	.0575	.3763	.4554	36
25	0.68730	0.72637	0.94620	1.0568	1.3767	1.4550	35
26	.68751	.72617	.94675	.0562	.3771	.4545	34
27	.68772	.72597	.94731	.0556	.3774	.4541	33
28	.68793	.72577	.94786	.0550	.3778	.4536	32
29	.68814	.72557	.94841	.0544	.3782	.4532	31
30	0.68835	0.72537	0.94896	1.0538	1.3786	1.4527	30
31	.68856	.72517	.94952	.0532	.3790	.4523	29
32	.68878	.72497	.95007	.0525	.3794	.4518	28
33	.68899	.72477	.95062	.0519	.3797	.4514	27
34	.68920	.72457	.95118	.0513	.3801	.4510	26
35	0.68941	0.72437	0.95173	1.0507	1.3805	1.4505	25
36	.68962	.72417	.95229	.0501	.3809	.4501	24
37	.68983	.72397	.95284	.0495	.3813	.4496	23
38	.69004	.72377	.95340	.0489	.3816	.4492	22
39	.69025	.72357	.95395	.0483	.3820	.4487	21
40	0.69046	0.72337	0.95451	1.0476	1.3824	1.4483	20
41	.69067	.72317	.95506	.0470	.3828	.4479	19
42	.69088	.72297	.95562	.0464	.3832	.4474	18
43	.69109	.72277	.95618	.0458	.3836	.4470	17
44	.69130	.72256	.95673	.0452	.3839	.4465	16
45	0.69151	0.72236	0.95729	1.0446	1.3843	1.4461	15
46	.69172	.72216	.95785	.0440	.3847	.4457	14
47	.69193	.72196	.95841	.0434	.3851	.4452	13
48	.69214	.72176	.95896	.0428	.3855	.4448	12
49	.69235	.72156	.95952	.0422	.3859	.4443	11
50	0.69256	0.72136	0.96008	1.0416	1.3863	1.4439	10
51	.69277	.72115	.96064	.0410	.3867	.4435	9
52	.69298	.72095	.96120	.0404	.3870	.4430	8
53	.69319	.72075	.96176	.0397	.3874	.4426	7
54	.69340	.72055	.96232	.0391	.3878	.4422	6
55	0.69361	0.72035	0.96288	1.0385	1.3882	1.4417	5
56	.69382	.72015	.96344	.0379	.3886	.4413	4
57	.69403	.71994	.96400	.0373	.3890	.4408	3
58	.69424	.71974	.96456	.0367	.3894	.4404	2
59	.69445	.71954	.96513	.0361	.3898	.4400	1
60	0.69466	0.71934	0.96569	1.0355	1.3902	1.4395	0
M	Cosine	Sine	Cotan.	Tan.	Cosec.	Secant	M

46°

44°

M	Sine	Cosine	Tan.	Cotan.	Secant	Cosec.	M
0	0.69466	0.71934	0.96569	1.0355	1.3902	1.4395	60
1	.69487	.71914	.96625	.0349	.3905	.4391	59
2	.69508	.71893	.96681	.0343	.3909	.4387	58
3	.69528	.71873	.96738	.0337	.3913	.4382	57
4	.69549	.71853	.96794	.0331	.3917	.4378	56
5	0.69570	0.71833	0.96850	1.0325	1.3921	1.4374	55
6	.69591	.71813	.96907	.0319	.3925	.4370	54
7	.69612	.71792	.96963	.0313	.3929	.4365	53
8	.69633	.71772	.97020	.0307	.3933	.4361	52
9	.69654	.71752	.97076	.0301	.3937	.4357	51
10	0.69675	0.71732	0.97133	1.0295	1.3941	1.4352	50
11	.69696	.71711	.97189	.0289	.3945	.4348	49
12	.69716	.71691	.97246	.0283	.3949	.4344	48
13	.69737	.71671	.97302	.0277	.3953	.4339	47
14	.69758	.71650	.97359	.0271	.3957	.4335	46
15	0.69779	0.71630	0.97416	1.0265	1.3960	1.4331	45
16	.69800	.71610	.97472	.0259	.3964	.4327	44
17	.69821	.71589	.97529	.0253	.3968	.4322	43
18	.69841	.71569	.97586	.0247	.3972	.4318	42
19	.69862	.71549	.97643	.0241	.3976	.4314	41
20	0.69883	0.71529	0.97700	1.0235	1.3980	1.4310	40
21	.69904	.71508	.97756	.0229	.3984	.4305	39
22	.69925	.71488	.97813	.0223	.3988	.4301	38
23	.69945	.71468	.97870	.0218	.3992	.4297	37
24	.69966	.71447	.97927	.0212	.3996	.4292	36
25	0.69987	0.71427	0.97984	1.0206	1.4000	1.4288	35
26	.70008	.71406	.98041	.0200	.4004	.4284	34
27	.70029	.71386	.98098	.0194	.4008	.4280	33
28	.70049	.71366	.98155	.0188	.4012	.4276	32
29	.70070	.71345	.98212	.0182	.4016	.4271	31
30	0.70091	0.71325	0.98270	1.0176	1.4020	1.4267	30
31	.70112	.71305	.98327	.0170	.4024	.4263	29
32	.70132	.71284	.98384	.0164	.4028	.4259	28
33	.70153	.71264	.98441	.0158	.4032	.4254	27
34	.70174	.71243	.98499	.0152	.4036	.4250	26
35	0.70194	0.71223	0.98556	1.0146	1.4040	1.4246	25
36	.70215	.71203	.98613	.0141	.4044	.4242	24
37	.70236	.71182	.98671	.0135	.4048	.4238	23
38	.70257	.71162	.98728	.0129	.4052	.4233	22
39	.70277	.71141	.98786	.0123	.4056	.4229	21
40	0.70298	0.71121	0.98843	1.0117	1.4060	1.4225	20
41	.70319	.71100	.98901	.0111	.4065	.4221	19
42	.70339	.71080	.98958	.0105	.4069	.4217	18
43	.70360	.71059	.99016	.0099	.4073	.4212	17
44	.70381	.71039	.99073	.0093	.4077	.4208	16
45	0.70401	0.71018	0.99131	1.0088	1.4081	1.4204	15
46	.70422	.70993	.99189	.0082	.4085	.4200	14
47	.70443	.70977	.99246	.0076	.4089	.4196	13
48	.70463	.70957	.99304	.0070	.4093	.4192	12
49	.70484	.70936	.99362	.0064	.4097	.4188	11
50	0.70504	0.70916	0.99420	1.0058	1.4101	1.4183	10
51	.70525	.70895	.99478	.0052	.4105	.4179	9
52	.70546	.70875	.99536	.0047	.4109	.4175	8
53	.70566	.70854	.99593	.0041	.4113	.4171	7
54	.70587	.70834	.99651	.0035	.4117	.4167	6
55	0.70608	0.70813	0.99709	1.0029	1.4122	1.4163	5
56	.70628	.70793	.99767	.0023	.4126	.4159	4
57	.70649	.70772	.99826	.0017	.4130	.4154	3
58	.70669	.70752	.99884	.0012	.4134	.4150	2
59	.70690	.70731	.99942	.0006	.4138	.4146	1
60	0.70711	0.70711	1.00000	1.0000	1.4142	1.4142	0
M	Cosine	Sine	Cotan.	Tan.	Cosec.	Secant	M

45°

Table of Decimal Equivalents in inches of Millimeters and Fractions of Millimeters

mm.	Inches	mm.	Inches	mm.	Inches
1/50	= .00079	26/50	= .02047	2	= .07874
2/50	= .00157	27/50	= .02126	3	= .11811
3/50	= .00236	28/50	= .02205	4	= .15748
4/50	= .00315	29/50	= .02283	5	= .19685
5/50	= .00394	30/50	= .02362	6	= .23622
6/50	= .00472	31/50	= .02441	7	= .27559
7/50	= .00551	32/50	= .02520	8	= .31496
8/50	= .00630	33/50	= .02598	9	= .35433
9/50	= .00709	34/50	= .02677	10	= .39370
10/50	= .00787	35/50	= .02756	11	= .43307
11/50	= .00866	36/50	= .02835	12	= .47244
12/50	= .00945	37/50	= .02913	13	= .51181
13/50	= .01024	38/50	= .02992	14	= .55118
14/50	= .01102	39/50	= .03071	15	= .59055
15/50	= .01181	40/50	= .03150	16	= .62992
16/50	= .01260	41/50	= .03228	17	= .66929
17/50	= .01339	42/50	= .03307	18	= .70866
18/50	= .01417	43/50	= .03386	19	= .74803
19/50	= .01496	44/50	= .03465	20	= .78740
20/50	= .01575	45/50	= .03543	21	= .82677
21/50	= .01654	46/50	= .03622	22	= .86614
22/50	= .01732	47/50	= .03701	23	= .90551
23/50	= .01811	48/50	= .03780	24	= .94488
24/50	= .01890	49/50	= .03858	25	= .98425
25/50	= .01969	1	= .03937	26	= 1.02362

10 mm. = 1 Centimeter = 0.3937 inches.
10 cm. = 1 Decimeter = 3.937 inches.
10 dm. = 1 Meter = 39.37 inches.
25.4 mm. = 1 English inch.

Table of Decimal Equivalents of Fractions of an Inch

8ths.	32ds.	64ths.	64ths.
1/8 = .125	1/32 = .03125	1/64 = .015625	33/64 = .515625
1/4 = .250	3/32 = .09375	3/64 = .046875	35/64 = .546875
3/8 = .375	5/32 = .15625	5/64 = .078125	37/64 = .578125
1/2 = .500	7/32 = .21875	7/64 = .109375	39/64 = .609375
5/8 = .625	9/32 = .28125	9/64 = .140625	41/64 = .640625
3/4 = .750	11/32 = .34375	11/64 = .171875	43/64 = .671875
7/8 = .875	13/32 = .40625	13/64 = .203125	45/64 = .703125
16ths.	15/32 = .46875	15/64 = .234375	47/64 = .734375
1/16 = .0625	17/32 = .53125	17/64 = .265625	49/64 = .765625
3/16 = .1875	19/32 = .59375	19/64 = .296875	51/64 = .796875
5/16 = .3125	21/32 = .65625	21/64 = .328125	53/64 = .828125
7/16 = .4375	23/32 = .71875	23/64 = .359375	55/64 = .859375
9/16 = .5625	25/32 = .78125	25/64 = .390625	57/64 = .890625
11/16 = .6875	27/32 = .84375	27/64 = .421875	59/64 = .921875
13/16 = .8125	29/32 = .90625	29/64 = .453125	61/64 = .953125
15/16 = .9375	31/32 = .96875	31/64 = .484375	63/64 = .984375

INDEX

A

Accuracy of Dividing Heads, 61
Adapters for Flanging Threaded Spindle Ends, 82
Adjustment, Care and Erection of Milling Machines, 41
  Adjusting Knee, Saddle and Table Bearings, 44
  Adjusting the Spindle, 43
  Care of the Machine, 46
  Changing Feeds, 45
  Changing Spindle Speeds, 44
  Countershaft, 41
  Erection, 41
  High Power Machines, 42
  Oiling, 42
  Operating Levers, 44
  Ordering Repairs, 47
  Removing the Spindle, 43
  Speed of Countershaft, How to compute, 42
  To use the Table, Cross and Vertical Feeds, 44
Addendum, 249
Angles and Leads for Spirals, Table of, 338
Angles, Leads and Change Gears for Cutting Spiral End Mills, 170
Angles, Leads and Change Gears for Cutting Spiral Milling Cutters, 170
Angles, Leads and Change Gears for Cutting Twist Drills, 337
Angular Indexing, 319
Angular Indexing, Table for, 329
Arbors, 82
Arbors, Carried in Stock, 84
Arbor Equipment for Millers, 86
Arbors, Keyways for, 82-83
Arbors, Method of Driving, 80
Arbors, Proper Arrangement of Supports and Cutters on, 78-79
Arbor Supports, 77
Attachments, Milling Machine, 23
  Cam Milling Attachments, 30
  Circular Milling Attachments, 30
  Dividing Heads, 56
  Driving Mechanism, 25
  High Speed Attachment, 26
  Index Heads, Combination, 24
  Indexing Attachments, High Number, 24-66
  Oil Pumps, 31
  Rack Indexing Attachments, 28
  Rack Indexing Attachment, Table for, 266
  Rack Milling Attachments, 28
  Slotting Attachments, 28
  Spiral Milling Attachments, 26
  Undercutting Attachments, 25
  Universal Milling Attachments, 27
  Vertical Milling Attachments, 27
  Vises, All Steel, 33
  Vises, Plain, Swivel and Toolmaker's, 32
Automatic Clamping and Releasing Fixtures, 195-230
Automatic Indexing Fixtures, 237
Automatic Millers, 35
Automatic Releasing Fixtures, 229

B

Bevel Gears, Computations for, 273
  Computing the off-set, 284
  Cutting Bevel Gears on a Miller, 278
  Formulas for Bevel Gear Calculations, 287
  Outside Diameter of Blank, 277
  Selecting the Cutter, 277
  Setting the Machine, 282
  The Shape of the Tooth, 278
  Tooth Elements, 280

C

Cam Milling Attachment, 30-383
Cams, Spiral Milling, 345
Care, Erection and Adjustment of Milling Machines (see Adjustment), 41
Change Gears, for Cutting Spirals, 332
  Application of Continued Fractions to, 334
  Change Gear Ratio, 332
  Leads, Change Gears and Angles, 311
  Leads, Change Gears and Angles for Cutting Spiral End Mills, 170
  Leads, Change Gears and Angles for Cutting Spiral Milling Cutters, 170
  Leads, Change Gears and Angles for Cutting Twist Drills, 337
  Leads, Table of, 340 to 344
  Placing Change Gears on the Machine, 336
Chattering, Causes of, 87

Chattering, Remedies for, 89
Chip, Influence of Size of, on Life of Cutter, 124
Chips from High Speed Milling, 134
Chordal Pitch, 248
Circular Milling Attachment, 29
Circular Pitch, 248-250
Clamping Devices for Fixtures, 210 to 215
Classification of Milling Machines, 7
Clearance for Cutters, 176
Column and Knee Construction, 13
Continued Fractions, 319-320
  Angular Indexing Tables, 329
  Application to Angular Indexing, 319
  Application to Computing Change Gears for Cutting Spirals, 326-334
  Application to Gearing a Lathe for Metric Threads, 325
  Greatest Common Divisor, 320
Continuous Milling, 192 and 226
Control, Centralized, 17
Coolant, Use of, on Cutters (see Stream Lubrication), 125
Cosecants, Table of, 386 to 400
Cosines, Table of, 386 to 400
Cotangents, Table of, 386 to 400
Cut, Relation of Size of, and Feed to Efficiency, 152
Cutter and Work Cooling System (see Stream Lubrication), 125
Cutter Arbors, 84-85
Cutter Sharpening, 172
Cutters, Milling, 140
  Action of, 92
  Capacity of, When Milling Cast Iron, 184
  Capacity of, When Milling Steel, 183
  For Cutting Gears, Table of, 252
  Effect of too many Teeth, 142
  End Mills, Design of, 152
  Face Mills, Cutting Tests on, 151
  Face Mills, Design of, 156
  Form Cutters, Design of, 162
  Helical Mills, Design and Use of, 162
  Influence of Size of Chip on Life of, 124
  Keyways for, 82-83
  Life of, When Milling Cast Iron, 124
  Method of Driving Face Mills, 80
  Nicked Teeth, 143
  Proper Arrangement on Arbors, 78-79
  Proper Clearance, 176
  Rake or Under-Cut Teeth, Influence of, 147 to 151
  Relation of Size of Cut and Feed to Efficiency, 152
  Renewing Worm, 176
  Resetting Work to, 70
  Setting of Machine for Making, 167
  Shell End Mills, Design of, 155
  Side Mills, Design of, 154
  Solid Mills, Their Construction, 140
  Speeds of (see under Speeds), 176
  Spiral Mills, Correct Design of, 143
  Splining Cutters, Saws, Slotting Cutters, etc., Design of, 160
  Table of Leads, Angles, etc., for making End Mills, 170
  Table of Leads, Angles, etc., for Making Spiral Mills, 170
  Tests on Face Mills, 151
  Tests on Spiral Milling Cutters, 146 to 150
  Twenty-Five Degree Spiral Angle, Action of, 144
  When Correctly Sharpened, 176
  Wide-Spaced Teeth, Influence of, 147
Cutting Bevel Gears on the Miller, 278
Cutting Capacity of a Miller, 183
Cutting Speeds, Experiments on, 127
Cutting Speeds, Safe Practical, 110 and 120
Cutting Spiral Gears on the Miller, 293
Cutting Spur Gears on the Miller, 253
Cutting Worm Gears on the Miller, 315

D

Decimal Equivalents of Fractions of an Inch, Table of, 402
Decimal Equivalents of Millimeters, Table of, 401
Dedendum, 249
Diametral Pitch, 248
Dividing Head, Accuracy of, 61
Dividing Head, Care of, 64
Dividing Head, How to Set Up for Indexing a Gear, 66
Dividing Heads, Causes and Remedy for Inaccurate Indexing, 65
Dividing Heads, Universal, 56
Divisor, Greatest Common, 320
Drives for Arbors, 80
Drives, Motor, 19
Driving Mechanism for Spiral Cutting, 25

E

Efficiency, Relation of Size of Cut and Feed to, 152
End Mills, Design of, 152
End Mills, Feeds and Speeds, Curves for, 116
End Mills, Sharpening, 177
Equivalents, Decimal, of Fractions of an Inch, 402

Equivalents, Decimal, of Millimeters, 401
Erection, Care and Adjustment of Milling Machines (see Adjustment), 41
Estimating Milling Work (see Power Required to do Milling), 182

F

Face Milling in Cast Iron, 116
Face Milling in Steel, 117
Face Mills, Action of, 97
Face Mills, Correct Tooth Outline, 90
Face Mills, Cutting Tests on, 151
Face Mills, Design of, 156
Face Mills, Flanged Spindle End for Driving, 80
Face Mills, Influence of Diameter of, on Production, 192
Face Mills, Sharpening, 178
Feed, Relation of Size of Cut and Feed to Efficiency, 152
Feeds and Speeds of Cutters (see Speeds of Milling Cutters), 104
Feeds, Influence on Production, 102
Feeds, Milling Machine, 101
  In Thousandths per Revolution, 102
  In Inches per Minute, 102
  Roughing and Finishing Cuts, 103
  Two Systems in Use, 101
Finishing Cuts in Cast Iron, 113
Finishing Cuts in Steel, 116
Fixtures, Automatic Clamping and Releasing, 195-230
Fixtures, Milling Jigs and, 197
  Accessibility for Inserting and Removing Work, 203
  Automatic Clamping, Releasing and Ejecting Fixtures, 230
  Automatic Indexing Fixtures, 237
  Automatic Releasing Fixtures, 229
  Axioms for the Fixture Designer, 201
  Clamps, 210 to 215
  Elimination of Clamping Strains from Table of Machine, 204
  Generous Ducts for Escape of Chips and Lubricant, 203
  Hand Indexing Fixtures, 232 to 237
  Loading Fixtures, 222
  Maintenance Cost, 199
  Provision in Excess of Needed Rigidity, 205
  Rapidity of Clamping, 202
  Reciprocal Fixtures, 227
  Removal of Clamping Members from Cutter Zone, 204
  Right Angle or Square Fixture, 224
  Rotary, Continuous Milling Fixtures, 226
  Rotary, Square or Reciprocating, 197
  Separation of Swiveling and Indexing Functions, 243
  Setting Pieces, 215
  Simple Fixture for One Piece, 217
  Skill of Workman as a Factor in Fixture Design, 199
  Standard Parts of Fixtures, 209
  Support Pins, 209
  Swiveling Fixtures, 239
  Tandem Fixtures, String Jigs, 218
  Vises Used as Fixtures, 206 to 209
Flanged Spindle End, 80
Flanges for Threaded Spindle Ends, 81
Formulas for Bevel Gear Calculations, 287
Formulas for Computing Change Gears, 326-332
Formulas for Indexing, 68
Formulas for Mitre Gears, 287
Formulas for Spiral Gears, 293 to 309
Formulas for Spur Gears, 257 to 259
Formulas for Worm Gears, 312-313
Fractions, Continued, 320

G

Gashing Angle for Worm Wheels, Table of, 318
Gashing Worm Wheels (Cutting), 315
Gear Cutters, Sharpening, 179
Gear Cutters, Standard Involute, Table of, 252
Gear Teeth, Metric System, 260
Gear Teeth, Module System, 260
Gears, Bevel, Rules and Formulas for, 287
  Bevel Gears, Cutting, on the Miller, 278
  Bevel Gears, Sizing and Cutting (see Bevel Gears), 273
Gears, Mitre, Rules and Formulas for, 287
  Mitre Gears, Cutting, on the Miller, 278
  Mitre Gears, Sizing and Cutting (see Bevel Gears), 273
Gears, Spiral, Rules and Formulas for, 293 to 309
  Spiral Gears, Cutting, on the Miller, 293-309
  Spiral Gears, Sizing and Cutting (see Spiral Gears), 291
Gears, Spur, Rules and Formulas for, 257 to 259
  Spur Gears, Cutting, on the Miller, 253 to 256
  Spur Gears, Sizing and Cutting (see Spur Gears), 247

Gears, Worm, Rules and Formulas for, 312, 313
Worm Gears, Cutting, on the Miller, 315
Worm Gears, Gashing, 315
Worm Gears, Hobbing, 317
Worm Gears, Sizing and Cutting (see Worm Gears), 310
Grinding Milling Cutters Properly (see Cutter Sharpening), 176

H

Heads, Combination, 22, 23
Heads, Gear Cutting, 22, 23
Heads, Plain, 23
Heads, Spiral, 23
Heads, Universal Indexing and Dividing, 56
Heat, Generation of, by Cutting Tools, 125
Helical Mills, Cutting Tests on, 147 to 150
Helical Mills, Design of, 162
High Number Indexing Attachment, 24 and 66
High Speed Milling Attachment, 26
Hobbing Worm Wheels, 317

I

Index Heads, Plain, 22
Index Heads, Universal, 56
Indexing, Angular, 319
Indexing Attachment, High Number, 24 and 66
Indexing, Causes of and Remedies for Inaccuracies, 55
Indexing Fixtures, Automatic, 237
Indexing Fixtures, Hand, 232 to 237
Indexing, How to Calculate, 68
Indexing, How to Set up for, 66
Indexing, Methods Employed, 67
Indexing, Tables, 72 to 76
Index Plates, Uses of Notches in, 70

J

Jig, String, 188

K

Keyway Milling, Speeds and Feeds for, 118
Keyways, for Cutters and Arbors, 82 and 83

L

Lead of a Spiral Gear, How to Compute, 299
Leads, Angles and Change Gears for Spirals, Table of, 338, 339
Leads, Change Gears and Angles for Cutting Twist Drills, 337
Leads, Change Gears and Angles for Making Spiral Mills, 170
Leads, Change Gears and Angles for Making Spiral End Mills, 170
Leads, Table of, 340 to 344
Life of Cutters Milling Cast Iron, 122
Lubrication of Cutters (see Stream Lubrication), 125

M

Maintenance Cost of Fixtures, 199
Manufacturing Millers, 7, 35, 38
Metric Pitches, 260
Millimeters, Decimal Equivalents of, in Inches, 401
Milling, An Analysis of the Process of, 91
Automatic Clamping and Releasing Fixtures, 195
Continuous Milling, 192 and 226
Horizontal Machine, Using a String Jig, 188
Horizontal Machine, Using One Vise, 187
Horizontal Machine, Using Two Vises, 188
Influence of Diameter of Face Mill, 192
Power Required to Do, 182
Relation Between Face Milling and Spiral Milling, 190
Revolution Marks, 95
The Action of a Face Mill, 97
The Action of a Side Mill, 99
The Action of a Spiral Mill, 92
Tooth Marks, 95
Various Methods of, 186
Vertical Milling with One Vise, 189
Vertical Milling with Two Vises, 190
Milling, Continuous, 192 and 226
Milling Cutters, Life of, When Milling Cast Iron, 122
Milling Cutters, Speeds of, 104
Milling Machines:
Automatic, 35
Column, 13
Centralized Control, 17
Details of, 9 to 19
Drive Gears, 10
Erection, Care and Adjustment of, 41
Feed Gears, 13
Feeds, 101
Knee, 13
Manufacturing, 7, 35, 38
Names of Parts of, 48 to 53
Plain, 9

Saddle, 13
Setting Up, 77
Selection of, 8
Table, 13
Tumbler, 11
Universal, 55
Vertical, 7 and 21
Milling Machines, Classification of, 7
Mitre Gears (see Bevel Gears), 273
Module Pitches, 260
Motor Drives, 19

N

Names of Parts of Milling Machines, 48 to 53
Notched Index Plate, Uses of, 71

O

Oiling, 42
Oil Pumps (see also Stream Lubrication), 31
Ordering Repairs, Instructions for, 47

P

Parts of Milling Machines and Their Names, 48 to 53
Pitch, Chordal, 248
Pitch, Circular, 248 and 250
Pitch, Diameter, Spur Gears, 249
Pitch, Diametral, 248
Pitch, Metric, 260
Pitch, Module, 260
Pitches, Comparative Table of Circular and Diametral, 260
Plain Milling Machines, 7-9
Plate, Index, Use of Notches in, 71
Power Quick Traverse and Return, 18
Power Required to do Milling, 182
Capacity of Cutters for Milling Cast Iron, 184
Cutting Capacity of a Machine in Cubic Inches, 183
How to Compute the Power of a Cone-Driven Machine, 182
How to Compute the Power of a High-Power Single Pulley Machine, 183
Other Factors Governing Production, 184
Practical Cutting Speeds, Safe, 110 and 120
Pressure Angles of Gear Teeth, 251
Process of Milling, an Analysis of the, 91
Production, Influence of Speed on, 107
Proportion, Trigonometry Expressed as, 270
Pumps, Oil (see also Stream Lubrication), 31

Q

Quick Traverse and Return, 18

R

Rack Indexing Attachment, 28
Rack Milling Attachment, 28
Racks, Tables for Indexing and Cutting, 262 to 266
Rake or Undercut Value of, in Cutters, 147
Reciprocal Milling Fixtures, 197 and 227
Releasing Fixtures, Automatic, 229
Repairs, Instructions for Ordering, 47
Resetting Work to the Cutter, 71
Revolution Marks, 95
Rotary Continuous Milling Fixtures, 226
Roughing Cuts in Cast Iron, 111
Roughing Cuts in Steel, 116

S

Saddle and Table Construction, 13
Secants, Table of, 386 to 400
Selection of a Miller, 8
Setting up the Machine, 77
Sharpening End Mills, 177
Sharpening Face Mills, 178
Sharpening Gear Cutters, 179
Sharpening Hand Reamers, 177
Sharpening Milling Cutters Properly, 172 to 176
Sharpening Spiral Mills, 172 to 176
Shop Trigonometry, Bevel Gears, 267
Application to a Shop Problem, Bevel Gears, 273
Definition of Sine, etc., 269
The Right Angle Triangle, 267
Trigonometric Tables, How to Use, 272
Trigonometry Expressed as Proportion, 270
Side Mill, Action of, 99
Sines, Table of, 386 to 400
Slotting Attachment, 28
Speed Changing, 44
Speeds of Milling Cutters, 104
Conditions Determining Proper Speed, 106
End Mills, Curves for, 114
Face Milling in Cast Iron, Curves for, 116
Face Milling Steel Castings, Curves for, 117

Finishing Cast Iron with Spiral Mills, Curves for, 113
Heating, Causes of, 104
Influence of Speed on Production, 107
Keyway Cutting, Curves for, 118
Life of Cutter, Influence of Size of Chip on, 124
Life of Cutters when Milling Cast Iron, 122
Other Factors which Determine Life of Cutters, 121
Roughing Cast Iron with Spiral Mills, Curves for, 111
Safe, Practical Speeds for Cutters, 110 and 120
Spiral Milling in Cast Iron, Curves for, 111
Spiral Milling in Steel, Curves for, 116
Spindle Drive, 10
Spindle End, Flanged, 80
Spindle Ends, Flanges for Threaded, 81
Spindle, Instructions for Adjusting, 43
Spindle, Instructions for Removing, 43
Spiral Cams, 345
Spiral Cutting, Change Gears for, 332
Spiral Gear Cutting, 291
Cutting Spiral Gears on the Miller, 293 to 309
Pitch, Lead, Normal Pitch, etc., 292
Selecting the Cutter, 295
Spiral Gears with Shafts at an Angle of Less than 90°, 305
Diameters, Circumferences, etc., 307
Number of Teeth and Spiral Angle, 306
Spiral Gears with Shafts at Right Angles, Computations for, 300
Computing the Lead, 303
Number of Teeth and Spiral Angle, 300
Selecting the Cutter, 303
Spiral Gears with Shafts Parallel, Computations for, 295
Computing the Lead, 299
Number of Teeth and Spiral Angle, 296
Selecting the Cutter, 298
Spiral Mills, Cutting Tests on, 146 to 151
Spiral Mills, Sharpening, 172 to 176
Spiral Mills, Design of, 143
Spur Gears, Sizing and Cutting, 247
Addendum and Dedendum, 249
Center Distance, 249
Chordal Pitch, 248
Circular Pitch, 248 and 250
Clearance and Full Depth, 250
Cutters for Cutting Gears, Table of Standard, 252
Cutting Gears on the Miller, 253
Cutting Large Gears, 255
Diametral Pitch, 248
Number of Teeth, 249
Outside Diameter, 250
Pitch Diameter, 249
Pitches, Comparative Table of Circular and Diametral, 260
Pressure Angles, 251
Racks, Table for Cutting, 262 to 266
Rules and Formulas for Dimensions of Spur Gears, 257
Selecting the Cutter, 252
Setting the Machine, 254
Sharpening Gear Cutters, 179
Table of Tooth Parts, 256
Spiral Heads, 20 and 56
Spiral Milling Attachment, 26
Stream Lubrication, Cutter and Work Cooling, 125
Application to Heavy Cuts, 139
Application to Light Finishing Cuts, 139
Chips from High Speed Milling, 134
Cutter Hoods, 137, 138
Cutting Speeds, Experiments on, 127
Effects of Ample Lubrication at High Speeds, 132
Generation of Heat by Cutting Tools, 125
Kinds of Lubricant, 136
Standard Equipment, 138
The Pump, 136
Swiveling Fixtures, 239

T

Tailstock, Dividing Head, 60
Tandem Fixtures, 218
Tangents, Table of, 386 to 400
Teeth, Wide Spaced, in Spiral Mills, 147
Toolroom Millers, 55
Tooth Marks, 95
Tooth Parts of Gears, Table of, 256
Trigonometric Functions, 385
Trigonometric Tables, 386 to 400
Trigonometry Expressed as Proportion, 270
Trigonometry, Shop, 267

U

Undercut or Rake, Value of, in Cutters, 147 to 151
Undercutting Attachment, 25
Universal Dividing Heads, 56
Universal Milling Attachment, 27
Universal Toolroom Millers, 55

V

Various Methods of Milling, 186
Vertical Attachments, 27
Vertical Continuous Milling, 192
Vertical Milling Machines, 7 and 21
Vises, All Steel, 33
Vises, All Steel, Use of as Fixtures, 206 to 209
Vises, Milling Machine, 32
Vise, Use of One as a Fixture, 187 and 189
Vise, Use of Two as a Fixture, 187 and 190

W

Wide Spaced Teeth in Spiral Mills, 147
Worm Gearing, 310
Cutting the Worm Wheel, 315
Gashing Angle for Worm Wheels, Table of, 318
Hobbing the Worm Wheel, 317
Outside Diameter, 311
Practical Example, 314
Rules and Formulas for, 312, 313
The Gashing Angle, 315
Worm Cutting Tool, 311
Worm Thread Parts, Table of Important Dimensions, 314

89089665145

B89089665145A

TDJ
.C49
.4

STORAGE

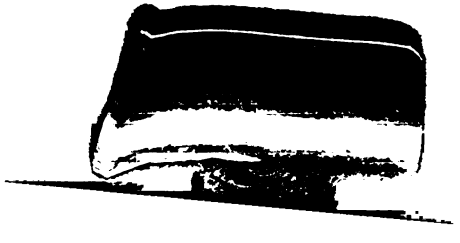

8908966514 5

b89089665145a